Appendix D4 – Management Programs (Property Management and Maintenance)

Appendix D4

Harford County, MD Department of Public Works
Watershed Protection and Restoration

20-SW Permits (July 1, 2024 - June 30, 2025)

Robert Cassilly
County Executive

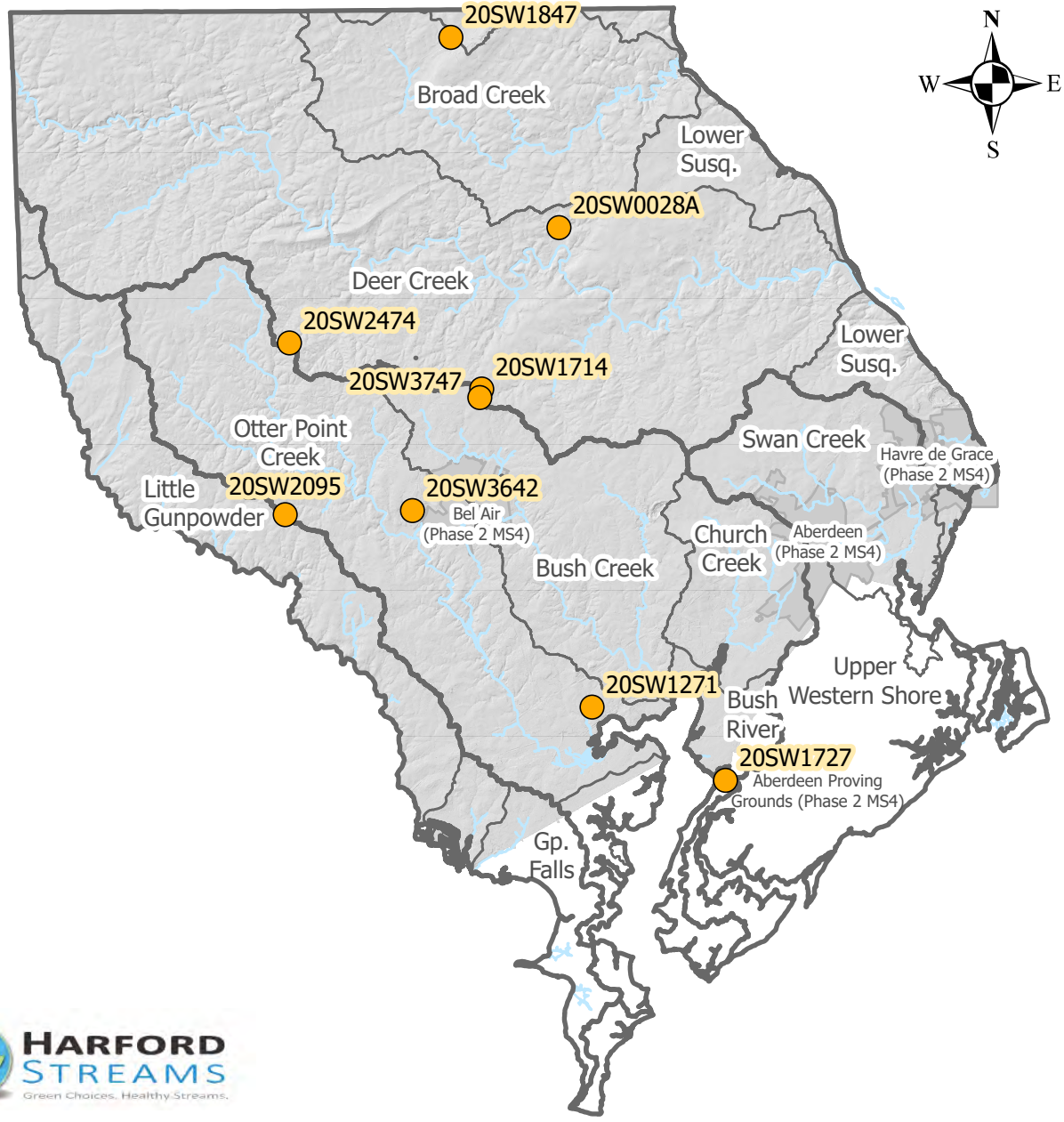

HARFORD STREAMS
Green Choices. Healthy Streams.

Harford Streams is a program developed and administered through Harford County Department of Public Works

0 1 2 4 6 8 Miles

NPDES Phase 1 MS4 Permit 22-DP-3310

Printed 12/2025

www.HarfordCountyMD.gov

HarfordStreams@HarfordCountyMD.gov

www.Facebook.com/HarfordStreams

(410) 638 - 3217

MUNI_FACILITIES_ID	FACILITY_NAME	NOI_NUM
HA25MUN000001	ABINGDON HIGHWAY MAINTENANCE FACILITY	20SW1271
HA25MUN000002	HICKORY HIGHWAY MAINTENANCE FACILITY	20SW1714
HA25MUN000003	WHITEFORD HIGHWAY MAINTENANCE FACILITY	20SW1847
HA25MUN000004	JARRETTSVILLE HIGHWAY MAINTENANCE FACILITY	20SW2474
HA25MUN000005	FALLSTON PARKS & REC MAINTENANCE FACILITY	20SW2095
HA25MUN000006	JARRETTSVILLE PARKS & REC MAINTENANCE FACILITY	12NE3577
HA25MUN000007	SCARBORO LANDFILL	20SW0028A
HA25MUN000008	SOD RUN WASTEWATER TREATMENT PLANT	20SW1727
HA25MUN000009	TOLLGATE LANDFILL	20SW3642
HA25MUN000010	FLEET MAINTENANCE FACILITY	20SW3747

UNITED STATES ENVIRONMENTAL PROTECTION AGENCY
WASHINGTON, DC20460

Annual Reporting Form

A. GENERAL INFORMATION

1. Facility Name:	Abingdon Highway Maintenance Facility		
Facility Physical Address:	3111 Philadelphia Road Abingdon, MD 21009		
2. NPDES Permit Tracking No.:	MDR002474		
3. Lead Inspectors Name:	Richard Wise	Title:	Watershed Restoration Specialist III
Additional Inspectors Name(s):	David Wong		
4. Contact Person:	Matt McKay	Title:	Supervisor
Phone:	(410)612-1616 x7650	E-mail:	mbmckay@harfordcountymd.gov
5. Inspection Date:	6/11/2025		

B. GENERAL INSPECTION FINDINGS

1. As part of this comprehensive site inspection, did you inspect all potential pollutant sources, including areas where industrial activity may be exposed to stormwater?

✓ YES NO

If NO, describe why not:

NOTE: *Complete Section C of this form for each industrial activity area inspected and included in your SWPPP or as newly identified in B.2 or B.3 below where pollutants may be exposed to stormwater.*

2. Did this inspection identify any stormwater or non-stormwater outfalls not previously identified in your SWPPP?

YES ✓ NO

If YES, for each location, describe the sources of those stormwater and non-stormwater discharges and any associated control measures in place:

3. Did this inspection identify any stormwater or non-stormwater discharges not previously identified in your SWPPP?

YES ✓ NO

If YES, for each location, describe the sources of those stormwater and non-stormwater discharges and any associated control measures in place:

4. Did you review stormwater monitoring data as part of this inspection to identify potential pollutant hot spots?

✓ YES NO NA, no monitoring performed

The quarterly visual monitoring reports and quarterly site facility inspection reports for the past four quarters were reviewed. No pollutant hot spots were identified or reported.

5. Describe any evidence of pollutants entering the drainage system or discharging to surface waters, and the condition of and around outfalls, including flow dissipation measures to prevent scouring.

The inspection was conducted during dry weather, three days after the most recent rain event. Evidence of sediment leaching beyond the silt fence installed at the washout area. Additional stormwater mitigation measures, such as a filter log or hay bales, should be installed to help reduce sediment leaching.

6. Have you taken or do you plan to take any corrective actions, as specified in Part 3 of the permit, since your last annual report submission (or since you received authorization to discharge under this permit if this is your first annual report), including any corrective actions identified as a result of this annual comprehensive site inspection?

If YES, how many conditions requiring review for correction action as specified in Parts 3.1 and 3.2 were addressed by these corrective actions?

4 conditions require corrective actions

NOTE: *Complete the attached Corrective Action Form (Section D) for each condition identified, including any conditions identified as a result of this comprehensive stormwater inspection.*

C. INDUSTRIAL ACTIVITY AREA SPECIFIC FINDINGS

Complete one block for each industrial activity area where pollutants may be exposed to stormwater. Copy this page for additional industrial activity areas.

In reviewing each area, you should consider:

- Industrial materials, residue, or trash that may have or could come into contact with stormwater;
- Leaks or spills from industrial equipment, drums, tanks, and other containers;
- Offsite tracking of industrial or waste materials from areas of no exposure to exposed areas; and
- Tracking or blowing of raw, final, or waste materials from areas of no exposure to exposed areas.

INDUSTRIAL ACTIVITY AREA **1**:

1. Brief Description**:**

DEF Tank & Dispenser

2. Are any control measures in need of maintenance or repair?	YES	✓ NO
3. Have any control measures failed and require replacement?	YES	✓ NO
4. Are any additional/revised control measures necessary in this area?	YES	✓ NO

If YES to any of these three questions, provide a description of the problem: (Any necessary corrective actions should be described on the attached Corrective Action Form)

No issues were observed at the DEF tank & dispenser. The area was free of sheens and showed no evidence of any leaks or spills.

INDUSTRIAL ACTIVITY AREA **2**:

1. Brief Description**:**

Fuel Pumps

2. Are any control measures in need of maintenance or repair?	YES	✓ NO
3. Have any control measures failed and require replacement?	YES	✓ NO
4. Are any additional/revised control measures necessary in this area?	YES	✓ NO

If YES to any of these three questions, provide a description of the problem: (Any necessary corrective actions should be described on the attached Corrective Action Form)

No issues were observed at the fueling area. The area was free of sheens and fresh leaks or spills. Absorbent was used for a past spill. Used absorbent should be shoveled or swept up and disposed of properly. Evidence of vehicle washing was observed. Vehicle washing should not take place in the fueling area.

INDUSTRIAL ACTIVITY AREA **3**:

1. Brief Description**:**

W&S Vehicle & Equipment Parking Areas

2. Are any control measures in need of maintenance or repair?	YES	✓ NO
3. Have any control measures failed and require replacement?	YES	✓ NO
4. Are any additional/revised control measures necessary in this area?	✓ YES	NO

If YES to any of these three questions, provide a description of the problem: (Any necessary corrective actions should be described on the attached Corrective Action Form)

Sediment piles and globules of petroleum products were observed in the Water & Sewer vehicle & equipment parking area located east of the Water & Sewer garage.

INDUSTRIAL ACTIVITY AREA 4:

1. Brief Description**:**

W&S Covered Storage Areas

2. Are any control measures in need of maintenance or repair?	YES	✓ NO
3. Have any control measures failed and require replacement?	YES	✓ NO
4. Are any additional/revised control measures necessary in this area?	YES	✓ NO

If YES to any of these three questions, provide a description of the problem: (Any necessary corrective actions should be described on the attached Corrective Action Form)

No issues were observed at the Water & Sewer covered storage areas. The areas were free of sheens and showed no evidence of any leaks or spills.

INDUSTRIAL ACTIVITY AREA 5:

1. Brief Description**:**

Generators

2. Are any control measures in need of maintenance or repair?	YES	✓ NO
3. Have any control measures failed and require replacement?	YES	✓ NO
4. Are any additional/revised control measures necessary in this area?	YES	✓ NO

If YES to any of these three questions, provide a description of the problem: (Any necessary corrective actions should be described on the attached Corrective Action Form)

No issues were observed at the facility's generators. The areas were free of sheens and showed no evidence of any leaks or spills.

INDUSTRIAL ACTIVITY AREA 6:

1. Brief Description**:**

Used Oil & Antifreeze Collection Area

2. Are any control measures in need of maintenance or repair?	YES	✓ NO
3. Have any control measures failed and require replacement?	YES	✓ NO
4. Are any additional/revised control measures necessary in this area?	YES	✓ NO

If YES to any of these three questions, provide a description of the problem: (Any necessary corrective actions should be described on the attached Corrective Action Form)

Possible hydraulic fluid was observed on the ground at the used oil and antifreeze collection area. A Maryland Environmental Service (MES) employee arrived during the inspection and was advised of the spill. The MES employee applied absorbent to the affected area. No other issues were observed.

INDUSTRIAL ACTIVITY AREA 7:

1. Brief Description**:**

HazMat Shed

2. Are any control measures in need of maintenance or repair?	YES	✓ NO
3. Have any control measures failed and require replacement?	YES	✓ NO
4. Are any additional/revised control measures necessary in this area?	YES	✓ NO

If YES to any of these three questions, provide a description of the problem: (Any necessary corrective actions should be described on the attached Corrective Action Form)

No issues were observed at the HazMat shed. The area was free of sheens and showed no evidence of any leaks or spills.

INDUSTRIAL ACTIVITY AREA 8:

1. Brief Description**:**

W&S Administrative Offices

2. Are any control measures in need of maintenance or repair?	YES	✓ NO
3. Have any control measures failed and require replacement?	YES	✓ NO
4. Are any additional/revised control measures necessary in this area?	YES	✓ NO

If YES to any of these three questions, provide a description of the problem: (Any necessary corrective actions should be described on the attached Corrective Action Form)

No issues were observed at the Water & Sewer Administrative Offices. The area was free of sheens and showed no evidence of any leaks or spills.

INDUSTRIAL ACTIVITY AREA 9:
5. Brief Description**:**

W&S Garage

6. Are any control measures in need of maintenance or repair?	YES	✓ NO
7. Have any control measures failed and require replacement?	YES	✓ NO
8. Are any additional/revised control measures necessary in this area?	YES	✓ NO

If YES to any of these three questions, provide a description of the problem: (Any necessary corrective actions should be described on the attached Corrective Action Form)

No issues were observed at the Water & Sewer Garage. The area was free of sheens and showed no evidence of any leaks or spills.

INDUSTRIAL ACTIVITY AREA 10:
5. Brief Description**:**

Highway Administrative Offices

6. Are any control measures in need of maintenance or repair?	YES	✓ NO
7. Have any control measures failed and require replacement?	YES	✓ NO
8. Are any additional/revised control measures necessary in this area?	YES	✓ NO

If YES to any of these three questions, provide a description of the problem: (Any necessary corrective actions should be described on the attached Corrective Action Form)

No issues were observed at the Highway Administrative Offices. The area was free of sheens and showed no evidence of any leaks or spills.

INDUSTRIAL ACTIVITY AREA 11:
5. Brief Description**:**

Highway Garage

6. Are any control measures in need of maintenance or repair?	YES	✓ NO
7. Have any control measures failed and require replacement?	YES	✓ NO
8. Are any additional/revised control measures necessary in this area?	✓ YES	NO

If YES to any of these three questions, provide a description of the problem: (Any necessary corrective actions should be described on the attached Corrective Action Form)

Evidence of fine sediment leaching beyond the silt fence at the washout area was observed. Accumulation of sediment and gravel observed at washout area.

INDUSTRIAL ACTIVITY AREA 12:
5. Brief Description**:**

Dumpsters

6. Are any control measures in need of maintenance or repair?	YES	✓ NO
7. Have any control measures failed and require replacement?	YES	✓ NO
8. Are any additional/revised control measures necessary in this area?	YES	✓ NO

If YES to any of these three questions, provide a description of the problem: (Any necessary corrective actions should be described on the attached Corrective Action Form)

No issues were observed at the dumpster areas. Dumpster lids should remain closed to prevent stormwater contamination.

INDUSTRIAL ACTIVITY AREA 13:
9. Brief Description**:**

Brine Tank

10.	Are any control measures in need of maintenance or repair?	YES	✓ NO
11.	Have any control measures failed and require replacement?	YES	✓ NO
12.	Are any additional/revised control measures necessary in this area?	YES	✓ NO

If YES to any of these three questions, provide a description of the problem: (Any necessary corrective actions should be described on the attached Corrective Action Form)

No issues were observed at the brine tank. The area was free of sheens and showed no signs of any leaks or spills.

INDUSTRIAL ACTIVITY AREA 14:
9. Brief Description**:**

Highway Vehicle & Equipment Parking Areas

10.	Are any control measures in need of maintenance or repair?	YES	✓ NO
11.	Have any control measures failed and require replacement?	YES	✓ NO
12.	Are any additional/revised control measures necessary in this area?	YES	✓ NO

If YES to any of these three questions, provide a description of the problem: (Any necessary corrective actions should be described on the attached Corrective Action Form)

No issues were observed in the Highway vehicle & equipment parking areas. The areas were free of sheens and showed no signs of any leaks or spills.

INDUSTRIAL ACTIVITY AREA 15:
9. Brief Description**:**

Salt Dome

10.	Are any control measures in need of maintenance or repair?	YES	✓ NO
11.	Have any control measures failed and require replacement?	YES	✓ NO
12.	Are any additional/revised control measures necessary in this area?	✓ YES	NO

If YES to any of these three questions, provide a description of the problem: (Any necessary corrective actions should be described on the attached Corrective Action Form)

The salt dome entrance was not secured with a berm. An open pail of protective coatings was discovered to the northeast of the salt dome.

INDUSTRIAL ACTIVITY AREA 16:
9. Brief Description**:**

Bus Parking

10.	Are any control measures in need of maintenance or repair?	YES	✓ NO
11.	Have any control measures failed and require replacement?	YES	✓ NO
12.	Are any additional/revised control measures necessary in this area?	YES	✓ NO

If YES to any of these three questions, provide a description of the problem: (Any necessary corrective actions should be described on the attached Corrective Action Form)

No issues were observed in the bus parking area. The area was free of sheens and showed no evidence of any leaks or spills.

INDUSTRIAL ACTIVITY AREA 17:

13. Brief Description**:**

Stockpile Area

14.	Are any control measures in need of maintenance or repair?	YES	✓ NO
15.	Have any control measures failed and require replacement?	YES	✓ NO
16.	Are any additional/revised control measures necessary in this area?	YES	✓ NO

If YES to any of these three questions, provide a description of the problem: (Any necessary corrective actions should be described on the attached Corrective Action Form)

No issues were observed in the stockpile area. The area was free of sheens and showed no evidence of any leaks or spills.

INDUSTRIAL ACTIVITY AREA 18:

13. Brief Description**:**

Spoils Area

14.	Are any control measures in need of maintenance or repair?	YES	✓ NO
15.	Have any control measures failed and require replacement?	YES	✓ NO
16.	Are any additional/revised control measures necessary in this area?	YES	✓ NO

If YES to any of these three questions, provide a description of the problem: (Any necessary corrective actions should be described on the attached Corrective Action Form)

No issues were observed in the spoils area. The area was free of sheens and showed no evidence of any leaks or spills.

D. CORRECTIVE ACTIONS

Complete this page for each specific condition requiring a corrective action or a review determining that no corrective action is needed. Copy this page for additional corrective actions or reviews.

Include both corrective actions that have been initiated or completed since the last annual report, and future corrective actions needed to address problems identified in this comprehensive stormwater inspection. Include an update on any outstanding corrective actions that had not been completed at the time of your previous annual report.

1. Corrective Action **1 of 4** for this reporting period.

2. Is this corrective action:
   - An update on a corrective action from a previous annual report; or
   - ✓ A new corrective action?

3. Identify the condition(s) triggering the need for this review:
   - Unauthorized release or discharge
   - Numeric effluent limitation exceedance
   - Control measures inadequate to meet applicable water quality standards
   - Control measures inadequate to meet non-numeric effluent limitations
   - ✓ Control measures not properly operated or maintained
   - Change in facility operations necessitated change in control measures
   - Average benchmark value exceedance
   - Other (describe): _____

4. Briefly describe the nature of the problem identified:

   Sediment piles and globules of petroleum product were observed in the Water & Sewer vehicle & equipment parking area located east of the Water & Sewer garage.

5. Date problem identified: **06/11/2025**

6. How problem was identified:
   - ✓ Comprehensive site inspection
   - Quarterly visual assessment
   - Routine facility inspection
   - Benchmark monitoring
   - Notification by EPA or State or local authorities
   - Other (describe): _____

7. Description of corrective action(s) taken or to be taken to eliminate or further investigate the problem (e.g. describe modifications or repairs to control measures, analyses to be conducted, etc.) or if no modifications are needed, basis for that determination:

   The sediment piles should be shoveled or swept away and disposed of properly. The petroleum globules should be removed with absorbent or absorbent pads and disposed of properly.

8. Did/will this corrective action require modification of your SWPPP? YES ✓ NO

9. Date corrective action initiated: **06/11/2025**

10. Date corrective action completed: **07/11/2025**

    Or expected to be completed: **09/03/2025**

11. If corrective action not yet completed, provide the status of corrective action at the time of the comprehensive site inspection and describe any remaining steps (including timeframes associated with each step) necessary to complete corrective action:

    The issue was observed during the comprehensive annual site inspection on 06/11/2025.
    Corrective action recommended to Supervisor on 06/11/2025.
    Corrective action completed on 07/11/2025. Sediment piles and petroleum globules were removed, and the area was cleaned.

D. CORRECTIVE ACTIONS

Complete this page for each specific condition requiring a corrective action or a review determining that no corrective action is needed. Copy this page for additional corrective actions or reviews.

Include both corrective actions that have been initiated or completed since the last annual report, and future corrective actions needed to address problems identified in this comprehensive stormwater inspection. Include an update on any outstanding corrective actions that had not been completed at the time of your previous annual report.

1. Corrective Action **2 of 4** for this reporting period.

2. Is this corrective action:
   - An update on a corrective action from a previous annual report; or
   - ✓ A new corrective action?

3. Identify the condition(s) triggering the need for this review:
   - Unauthorized release or discharge
   - Numeric effluent limitation exceedance
   - Control measures inadequate to meet applicable water quality standards
   - Control measures inadequate to meet non-numeric effluent limitations
   - ✓ Control measures not properly operated or maintained
   - Change in facility operations necessitated change in control measures
   - Average benchmark value exceedance
   - Other (describe): _____

4. Briefly describe the nature of the problem identified:

   Evidence of fine sediment leaching beyond the silt fence at the washout area was observed. Accumulation of sediment and gravel observed at washout area.

5. Date problem identified: **06/11/2025**

6. How problem was identified:
   - ✓ Comprehensive site inspection
   - Quarterly visual assessment
   - Routine facility inspection
   - Benchmark monitoring
   - Notification by EPA or State or local authorities
   - Other (describe): _____

7. Description of corrective action(s) taken or to be taken to eliminate or further investigate the problem (e.g. describe modifications or repairs to control measures, analyses to be conducted, etc.) or if no modifications are needed, basis for that determination:

   Sediment and gravel should be shoveled or swept up and disposed of properly. Additional control measures should be implemented to prevent fine sediments leaching beyond the silt fence and into nearby surface waters.

8. Did/will this corrective action require modification of your SWPPP? YES ✓ NO

9. Date corrective action initiated: **06/11/2025**

10. Date corrective action completed: **07/11/2025**

    Or expected to be completed: **09/03/2025**

11. If corrective action not yet completed, provide the status of corrective action at the time of the comprehensive site inspection and describe any remaining steps (including timeframes associated with each step) necessary to complete corrective action:

    The issue was observed during the comprehensive annual site inspection on 06/11/2025.
    Corrective action recommended to Supervisor on 06/11/2025.
    Corrective action completed on 07/11/2025. Sediment removed from washout area and behind silt fence. New rip rap placed in channel behind silt fence. Additional silt fence installed.

D. CORRECTIVE ACTIONS

Complete this page for each specific condition requiring a corrective action or a review determining that no corrective action is needed. Copy this page for additional corrective actions or reviews.

Include both corrective actions that have been initiated or completed since the last annual report, and future corrective actions needed to address problems identified in this comprehensive stormwater inspection. Include an update on any outstanding corrective actions that had not been completed at the time of your previous annual report.

1. Corrective Action **3 of 4** for this reporting period.

2. Is this corrective action:
   - An update on a corrective action from a previous annual report; or
   - ✓ A new corrective action?

3. Identify the condition(s) triggering the need for this review:
   - Unauthorized release or discharge
   - Numeric effluent limitation exceedance
   - Control measures inadequate to meet applicable water quality standards
   - Control measures inadequate to meet non-numeric effluent limitations
   - ✓ Control measures not properly operated or maintained
   - Change in facility operations necessitated change in control measures
   - Average benchmark value exceedance
   - Other (describe): _____

4. Briefly describe the nature of the problem identified:

   A berm has not been installed at entrance to salt dome to prevent stormwater contamination.

5. Date problem identified: **06/11/2025**

6. How problem was identified:
   - ✓ Comprehensive site inspection
   - Quarterly visual assessment
   - Routine facility inspection
   - Benchmark monitoring
   - Notification by EPA or State or local authorities
   - Other (describe): _____

7. Description of corrective action(s) taken or to be taken to eliminate or further investigate the problem (e.g. describe modifications or repairs to control measures, analyses to be conducted, etc.) or if no modifications are needed, basis for that determination:

   Install a berm at the salt dome entrance. The berm should be high enough to contain salt within the dome and prevent stormwater contamination.

8. Did/will this corrective action require modification of your SWPPP? YES ✓ NO

9. Date corrective action initiated: **06/11/2025**

10. Date corrective action completed: **07/11/2025**

    Or expected to be completed: **09/03/2025**

11. If corrective action not yet completed, provide the status of corrective action at the time of the comprehensive site inspection and describe any remaining steps (including timeframes associated with each step) necessary to complete corrective action:

    The issue was observed during the comprehensive annual site inspection on 06/11/2025.
    Corrective action recommended to Supervisor on 06/11/2025.
    Corrective action completed on 07/11/2025. Asphalt berm placed at front of salt dome entrance.

D. CORRECTIVE ACTIONS

Complete this page for each specific condition requiring a corrective action or a review determining that no corrective action is needed. Copy this page for additional corrective actions or reviews.

Include both corrective actions that have been initiated or completed since the last annual report, and future corrective actions needed to address problems identified in this comprehensive stormwater inspection. Include an update on any outstanding corrective actions that had not been completed at the time of your previous annual report.

1. Corrective Action **4 of 4** for this reporting period.

2. Is this corrective action:
   - An update on a corrective action from a previous annual report; or
   - ✓ A new corrective action?

3. Identify the condition(s) triggering the need for this review:
   - Unauthorized release or discharge
   - Numeric effluent limitation exceedance
   - Control measures inadequate to meet applicable water quality standards
   - Control measures inadequate to meet non-numeric effluent limitations
   - ✓ Control measures not properly operated or maintained
   - Change in facility operations necessitated change in control measures
   - Average benchmark value exceedance
   - Other (describe): _____

4. Briefly describe the nature of the problem identified:

   An open pail or protective coating was located northeast of the salt dome.

5. Date problem identified: **06/11/2025**

6. How problem was identified:
   - ✓ Comprehensive site inspection
   - Quarterly visual assessment
   - Routine facility inspection
   - Benchmark monitoring
   - Notification by EPA or State or local authorities
   - Other (describe): _____

7. Description of corrective action(s) taken or to be taken to eliminate or further investigate the problem (e.g. describe modifications or repairs to control measures, analyses to be conducted, etc.) or if no modifications are needed, basis for that determination:

   Transfer pail to a covered location until proper disposal can take place.

8. Did/will this corrective action require modification of your SWPPP? YES ✓ NO

9. Date corrective action initiated: **06/11/2025**

10. Date corrective action completed: **06/11/2025**

    Or expected to be completed: **09/03/2025**

11. If corrective action not yet completed, provide the status of corrective action at the time of the comprehensive site inspection and describe any remaining steps (including timeframes associated with each step) necessary to complete corrective action:

    The issue was observed during the comprehensive annual site inspection on 06/11/2025.
    Corrective action recommended to Supervisor on 06/11/2025.
    Corrective action completed on 6/11/2025. Pail was transferred to an indoor storage area.

E. ANNUAL REPORT CERTIFICATION

1. Compliance Certification

Do you certify that your annual inspection has met the requirements of Part 4.2 of the permit, and that, based upon the results of this inspection, to the best of your knowledge, you are in compliance with the permit? ✓ YES NO

If NO, summarize why you are not in compliance with the permit:

2. Annual Report Certification

I certify under penalty of law that this document and all attachments were prepared under my direction or supervision in accordance with a system designed to assure that qualified personnel properly gathered and evaluated the information submitted. Based on my inquiry of the person or persons who manage the system, or those persons directly responsible for gathering the information, the information submitted is, to the best of my knowledge and belief, true, accurate, and complete. I am aware that there are significant penalties for submitting false information, including the possibility of fine and imprisonment for knowing violations.

Authorized Representative
Printed Name: Richard Wise Title: Watershed Restoration Specialist III

Signature: Richard Wise Date Signed: 6/11/2025

Abingdon Highway Maintenance Facility

3111 Philadelphia Road
Abingdon, MD 21009

Inspection Date: June 11, 2025

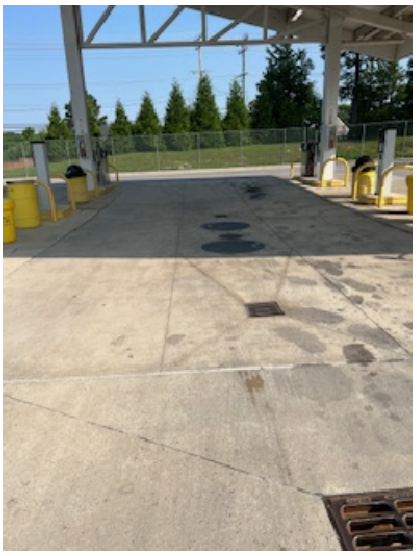

Fueling Area



Feuling Area

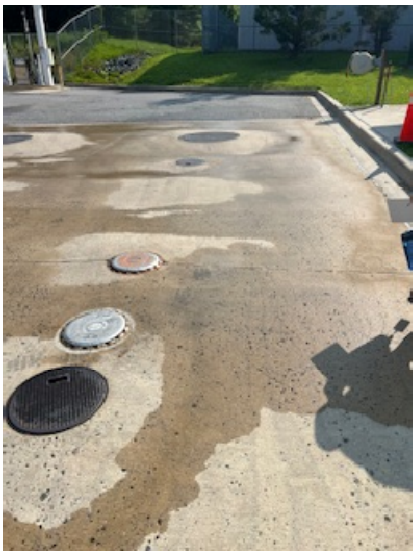

Evidence of Vehicle Washing at Fueling Area



Spill Kit (Fueling Area)

Abingdon Highway Maintenance Facility

3111 Philadelphia Road
Abingdon, MD 21009

Inspection Date: June 11, 2025



Used Absorbent

Note: Used absorbent should be shoveled or swept up and disposed of properly.



DEF Tank & Dispenser



Fueling Area



Micro Bioretention (South of Fueling Area)

Abingdon Highway Maintenance Facility

3111 Philadelphia Road
Abingdon, MD 21009

Inspection Date: June 11, 2025



Water & Sewer Covered Storage Area



Water & Sewer Vehicle & Equipment Parking (Northeast of Large W&S Covered Storage Area)



Water & Sewer Vehicle & Equipment Parking (Northeast of Large W&S Covered Storage Area)



Generator (Fueling Area)

Abingdon Highway Maintenance Facility

3111 Philadelphia Road
Abingdon, MD 21009

Inspection Date: June 11, 2025



Generator (East of Large W&S Covered Storage Area)



55-Gallon Drum with Unsecured Lid (North of Small W&S Covered Storage Area)

Note: Lid should be properly secured



Small W&S Covered Storage Area (North of W&S Garage)



Small W&S Covered Storage Area (North of W&S Garage)

Abingdon Highway Maintenance Facility

3111 Philadelphia Road
Abingdon, MD 21009

Inspection Date: June 11, 2025



Sediment Piles in W&S Vehicle & Equipment Parking Area (North of HazMat Shed)

Note: Sediment should be removed and disposed of properly.



Sediment Piles in W&S Vehicle & Equipment Parking Area (North of HazMat Shed)

Note: Sediment should be removed and disposed of properly.



Petroleum Globules in W&S Vehicle & Equipment Parking Area (North of HazMat Shed)

Note: Petroleum globules should be removed and disposed of properly.



HazMat Shed

Abingdon Highway Maintenance Facility

3111 Philadelphia Road
Abingdon, MD 21009

Inspection Date: June 11, 2025



East Side of W&S Garage



W&S Dumpsters (East of W&S Garage)



W&S Dumpster (East of W&S Garage)



East Side of W&S Garage

Abingdon Highway Maintenance Facility

3111 Philadelphia Road
Abingdon, MD 21009

Inspection Date: June 11, 2025



W&S Vehicle & Equipment Parking (East of W&S Garage)



Snowplows (East-Southeast of W&S Garage)



Stormwater Management Pond



Stormwater Management Pond

Abingdon Highway Maintenance Facility

3111 Philadelphia Road
Abingdon, MD 21009

Inspection Date: June 11, 2025



South Side of W&S Administration Building



W&S Vehicle & Equipment Parking (South of W&S Garage)



W&S Vehicle & Equipment Parking (South of W&S Garage)



Pail of Protective Coating with no Lid

Note: Pail should be transferred to a covered location until proper disposal can take place.

Abingdon Highway Maintenance Facility

3111 Philadelphia Road
Abingdon, MD 21009

Inspection Date: June 11, 2025



Tank Containing Beet Juice



Salt Dome Entrance

Note: A berm should be constructed at the entrance of the salt dome to contain the salt and prevent stormwater contamination.



Snowplows Around the Salt Dome



Snowplows Around the Salt Dome

Abingdon Highway Maintenance Facility

3111 Philadelphia Road
Abingdon, MD 21009

Inspection Date: June 11, 2025



Stockpile



Stockpile



Stockpile



Stockpile

Abingdon Highway Maintenance Facility

3111 Philadelphia Road
Abingdon, MD 21009

Inspection Date: June 11, 2025



Stockpile



W&S Dewatering Station



W&S Dewatering Station (South of Silt Fence)



Spoils Area

Abingdon Highway Maintenance Facility

3111 Philadelphia Road
Abingdon, MD 21009

Inspection Date: June 11, 2025



Spoils Area



Snowplows in North End of Stockpile Area

Note: Minor staining from hydraulic fluid. Use absorbent as necessary when fluid leaks from connection hoses.



Snowplows in North End of Stockpile Area



Salt Brine Tank

Abingdon Highway Maintenance Facility

3111 Philadelphia Road
Abingdon, MD 21009

Inspection Date: June 11, 2025



Vehicle Washout Area

Note: Sediment accumulation should be removed.



Silt Fence Located South of Vehicle Washout Area



Vehicle Washout Area

Note: Sediment accumulation beyond the silt fence. Additional measures required.



Vehicle Washout Area

Note: Sediment accumulation beyond the silt fence. Additional measures required.

Abingdon Highway Maintenance Facility

3111 Philadelphia Road
Abingdon, MD 21009

Inspection Date: June 11, 2025



Vehicle Washout Area

Note: Sediment accumulation beyond the silt fence. Additional measures required.



Silt Fence Located South of Vehicle Washout Area



Vehicle Washout Area

Note: Sediment accumulation should be removed.



Vehicle Washout Area

Note: Sediment accumulation should be removed.

Abingdon Highway Maintenance Facility

3111 Philadelphia Road
Abingdon, MD 21009

Inspection Date: June 11, 2025



Dumpster Area (West of Highway Garage)



West Side View of Highway Garage



West Side View of Highway Garage



Generator Located Northwest of Highway Administration Building

Abingdon Highway Maintenance Facility

3111 Philadelphia Road
Abingdon, MD 21009

Inspection Date: June 11, 2025



Used Antifreeze Collection Tank



Used Oil Collection Tank



Used Oil & Antifreeze Collection Area

Note: MES employee placed absorbent on petroleum product spill during time of inspection.



Used Oil & Antifreeze Collection Area

Note: MES employee placed absorbent on petroleum product spill during time of inspection.

Abingdon Highway Maintenance Facility

3111 Philadelphia Road
Abingdon, MD 21009

Inspection Date: June 11, 2025



Washout Area

Sediment removed and area cleaned on 07/11/2025



Rip Rap Channel Behind Washout Area

Sediment removed and new rip rap added on 07/11/2025

UNITED STATES ENVIRONMENTAL PROTECTION AGENCY
WASHINGTON, DC20460

Annual Reporting Form

A. GENERAL INFORMATION

1. Facility Name:	Parks & Rec Fallston Shop		
Facility Physical Address:	1809 Fallston Rd Fallston, MD 21047		
2. NPDES Permit Tracking No.:	MDR002095		
3. Lead Inspectors Name:	Richard Wise	Title:	Watershed Restoration Specialist III
Additional Inspectors Name(s):	Andrew Bodt		Capital Project Manager
4. Contact Person:	Ron Griffin	Title:	Superintendent
Phone:	(410)638-3535 x7640	E-mail:	rlgriffin@harfordcountymd.gov
5. Inspection Date:	5/28/2025		

B. GENERAL INSPECTION FINDINGS

1. As part of this comprehensive site inspection, did you inspect all potential pollutant sources, including areas where industrial activity may be exposed to stormwater?

✓ YES NO

If NO, describe why not:

NOTE: *Complete Section C of this form for each industrial activity area inspected and included in your SWPPP or as newly identified in B.2 or B.3 below where pollutants may be exposed to stormwater.*

2. Did this inspection identify any stormwater or non-stormwater outfalls not previously identified in your SWPPP?

YES ✓ NO

If YES, for each location, describe the sources of those stormwater and non-stormwater discharges and any associated control measures in place:

3. Did this inspection identify any stormwater or non-stormwater discharges not previously identified in your SWPPP?

YES ✓ NO

If YES, for each location, describe the sources of those stormwater and non-stormwater discharges and any associated control measures in place:

4. Did you review stormwater monitoring data as part of this inspection to identify potential pollutant hot spots?

✓ YES NO NA, no monitoring performed

The quarterly visual monitoring reports and quarterly site facility inspection reports for the past four quarters were reviewed. No pollutant hot spots were identified or reported.

5. Describe any evidence of pollutants entering the drainage system or discharging to surface waters, and the condition of and around outfalls, including flow dissipation measures to prevent scouring.

This inspection was conducted during a precipitation event. There was no evidence of pollutants entering the drainage system or discharging to surface water. There were some accumulated sediments beneath one vehicle parked in the vehicle and trailer parking area. No sediment was observed in the sheet flow from beneath the vehicle.

6. Have you taken or do you plan to take any corrective actions, as specified in Part 3 of the permit, since your last annual report submission (or since you received authorization to discharge under this permit if this is your first annual report), including any corrective actions identified as a result of this annual comprehensive site inspection?

✓ YES NO

If YES, how many conditions requiring review for correction action as specified in Parts 3.1 and 3.2 were addressed by these corrective actions?

1 condition requires corrective action

NOTE: *Complete the attached Corrective Action Form (Section D) for each condition identified, including any conditions identified as a result of this comprehensive stormwater inspection.*

C. INDUSTRIAL ACTIVITY AREA SPECIFIC FINDINGS

Complete one block for each industrial activity area where pollutants may be exposed to stormwater. Copy this page for additional industrial activity areas.

In reviewing each area, you should consider:

- Industrial materials, residue, or trash that may have or could come into contact with stormwater;
- Leaks or spills from industrial equipment, drums, tanks, and other containers;
- Offsite tracking of industrial or waste materials from areas of no exposure to exposed areas; and
- Tracking or blowing of raw, final, or waste materials from areas of no exposure to exposed areas.

INDUSTRIAL ACTIVITY AREA **1**:

1. Brief Description**:**

Fueling Area

2. Are any control measures in need of maintenance or repair?	YES	✓ NO
3. Have any control measures failed and require replacement?	YES	✓ NO
4. Are any additional/revised control measures necessary in this area?	YES	✓ NO

If YES to any of these three questions, provide a description of the problem: (Any necessary corrective actions should be described on the attached Corrective Action Form)

No issues observed at the fueling area. The area was free of sheens and showed no evidence of any leaks or spills.

INDUSTRIAL ACTIVITY AREA **2**:

1. Brief Description**:**

Used Oil Tank

2. Are any control measures in need of maintenance or repair?	YES	✓ NO
3. Have any control measures failed and require replacement?	YES	✓ NO
4. Are any additional/revised control measures necessary in this area?	YES	✓ NO

If YES to any of these three questions, provide a description of the problem: (Any necessary corrective actions should be described on the attached Corrective Action Form)

No issues observed at the used oil tank. The area was free of sheens and showed no evidence of any leaks or spills.

INDUSTRIAL ACTIVITY AREA **3**:

1. Brief Description**:**

Office Building

2. Are any control measures in need of maintenance or repair?	YES	✓ NO
3. Have any control measures failed and require replacement?	YES	✓ NO
4. Are any additional/revised control measures necessary in this area?	YES	✓ NO

If YES to any of these three questions, provide a description of the problem: (Any necessary corrective actions should be described on the attached Corrective Action Form)

No issues observed in the office building areas. The areas were free of sheens and showed no evidence of any leaks or spills.

INDUSTRIAL ACTIVITY AREA 4:

1. Brief Description**:**

Equipment & Material Storage Areas

2. Are any control measures in need of maintenance or repair?	YES	✓ NO
3. Have any control measures failed and require replacement?	YES	✓ NO
4. Are any additional/revised control measures necessary in this area?	YES	✓ NO

If YES to any of these three questions, provide a description of the problem: (Any necessary corrective actions should be described on the attached Corrective Action Form)

No issues observed in the equipment and material storage areas. The areas were free of sheens and showed no evidence of any leaks or spills.

INDUSTRIAL ACTIVITY AREA 5:

1. Brief Description:

Maintenance Garage

2. Are any control measures in need of maintenance or repair?	YES	✓ NO
3. Have any control measures failed and require replacement?	YES	✓ NO
4. Are any additional/revised control measures necessary in this area?	YES	✓ NO

If YES to any of these three questions, provide a description of the problem: (Any necessary corrective actions should be described on the attached Corrective Action Form)

No issues observed in the maintenance garage area. The area was free of sheens and showed no evidence of any leaks or spills.

INDUSTRIAL ACTIVITY AREA 6:

1. Brief Description:

Storage Area (former Wash Bay)

2. Are any control measures in need of maintenance or repair?	YES	✓ NO
3. Have any control measures failed and require replacement?	YES	✓ NO
4. Are any additional/revised control measures necessary in this area?	YES	✓ NO

If YES to any of these three questions, provide a description of the problem: (Any necessary corrective actions should be described on the attached Corrective Action Form)

No issues observed in the storage area. The area was free of sheens and showed no evidence of any leaks or spills.

INDUSTRIAL ACTIVITY AREA 7:

1. Brief Description:

Heating Oil Tank

2. Are any control measures in need of maintenance or repair?	YES	✓ NO
3. Have any control measures failed and require replacement?	YES	✓ NO
4. Are any additional/revised control measures necessary in this area?	YES	✓ NO

If YES to any of these three questions, provide a description of the problem: (Any necessary corrective actions should be described on the attached Corrective Action Form)

No issues observed in the heating oil tank area. The area was free of sheens and showed no evidence of any leaks or spills.

INDUSTRIAL ACTIVITY AREA 8:

1. Brief Description:

Vehicle & Trailer Parking Areas

2. Are any control measures in need of maintenance or repair?	YES	✓ NO
3. Have any control measures failed and require replacement?	YES	✓ NO
4. Are any additional/revised control measures necessary in this area?	✓ YES	NO

If YES to any of these three questions, provide a description of the problem: (Any necessary corrective actions should be described on the attached Corrective Action Form)

Sediment accumulation observed beneath one dump truck parked in the vehicle and trailer parking area. The sediment was wet but not observed in sheet flow during the time of the inspection, which took place during a precipitation event.

D. CORRECTIVE ACTIONS

Complete this page for each specific condition requiring a corrective action or a review determining that no corrective action is needed. Copy this page for additional corrective actions or reviews.

Include both corrective actions that have been initiated or completed since the last annual report, and future corrective actions needed to address problems identified in this comprehensive stormwater inspection. Include an update on any outstanding corrective actions that had not been completed at the time of your previous annual report.

1. Corrective Action **1** of **1** for this reporting period.

2. Is this corrective action:
   - An update on a corrective action from a previous annual report; or
   - ✓ A new corrective action?

3. Identify the condition(s) triggering the need for this review:
   - Unauthorized release or discharge
   - Numeric effluent limitation exceedance
   - Control measures inadequate to meet applicable water quality standards
   - Control measures inadequate to meet non-numeric effluent limitations
   - ✓ Control measures not properly operated or maintained
   - Change in facility operations necessitated change in control measures
   - Average benchmark value exceedance
   - Other (describe): _____

4. Briefly describe the nature of the problem identified:

   Sediment accumulation observed beneath one dump truck parked in the vehicle and trailer parking area. The sediment was wet but not observed in sheet flow during the time of the inspection, which took place during a precipitation event.

5. Date problem identified: **05/28/2025**

6. How problem was identified:
   - ✓ Comprehensive site inspection
   - Quarterly visual assessment
   - Routine facility inspection
   - Benchmark monitoring
   - Notification by EPA or State or local authorities
   - Other (describe): _____

7. Description of corrective action(s) taken or to be taken to eliminate or further investigate the problem (e.g. describe modifications or repairs to control measures, analyses to be conducted, etc.) or if no modifications are needed, basis for that determination:

   Shovel or sweep up accumulated sediments from beneath dump truck to prevent stormwater contamination and potential discharge into surface waters during precipitation events.

8. Did/will this corrective action require modification of your SWPPP? YES ✔ NO

9. Date corrective action initiated: **05/28/2025**

10. Date corrective action completed: **05/30/2025**

    Or expected to be completed: **08/20/2025**

11. If corrective action not yet completed, provide the status of corrective action at the time of the comprehensive site inspection and describe any remaining steps (including timeframes associated with each step) necessary to complete corrective action:

    The issue was observed during the comprehensive annual site inspection on 05/28/2025.
    Corrective action recommended to Superintendent on 05/28/2025.
    Corrective action was performed on 05/30/2025. Sediments have been shoveled and swept to prevent contamination of stormwater.

E. ANNUAL REPORT CERTIFICATION

1. Compliance Certification

Do you certify that your annual inspection has met the requirements of Part 4.2 of the permit, and that, based upon the results of this inspection, to the best of your knowledge, you are in compliance with the permit? ✓ YES NO

If NO, summarize why you are not in compliance with the permit:

2. Annual Report Certification

I certify under penalty of law that this document and all attachments were prepared under my direction or supervision in accordance with a system designed to assure that qualified personnel properly gathered and evaluated the information submitted. Based on my inquiry of the person or persons who manage the system, or those persons directly responsible for gathering the information, the information submitted is, to the best of my knowledge and belief, true, accurate, and complete. I am aware that there are significant penalties for submitting false information, including the possibility of fine and imprisonment for knowing violations.

Authorized Representative
Printed Name: Richard Wise Title: Watershed Restoration Specialist III

Signature: Richard Wise Date Signed: **05/28/2025**

Parks and Recreation Fallston Shop

1809 Fallston Road
Fallston, MD 21047

Inspection Date: May 28, 2025



Office Building and Equipment & Material Storage



Equipment & Material Storage



Vehicle & Trailer Parking



Vehicle & Trailer Parking

Parks and Recreation Fallston Shop

1809 Fallston Road
Fallston, MD 21047

Inspection Date: May 28, 2025



Vehicle & Trailer Parking



Vehicle & Trailer Parking



Vehicle & Trailer Parking
Note: Sediment accumulated beneath vehicle. Sediment was not seen
Update: Sediment cleaned up on 5/30/25.
See attached photos on Page 5.



Storage Shed, Empty Drums used as Trash Receptacles and Vehicle & Trailer Parking

Parks and Recreation Fallston Shop

1809 Fallston Road
Fallston, MD 21047

Inspection Date: May 28, 2025



Storage Shed, Empty Drums used as Trash Receptacles, Open-Top Roll-Off Dumpster for Scrap Metal



Vehicle & Trailer Parking



Fueling Area



Used Oil Tank

Parks and Recreation Fallston Shop

1809 Fallston Road
Fallston, MD 21047

Inspection Date: May 28, 2025



Maintenance Garage



View from North Side of Facility to South Side of Facility



20-SW Permit Required Signage



Heating Oil Tank

Parks and Recreation Fallston Shop

1809 Fallston Road
Fallston, MD 21047

Inspection Date: May 28, 2025



Bioretention



Drainage Area #1 Inlet – Discharges to Outfall 001



Area of sediment on 5/30/25 prior to corrective action.



Area on 5/30/25 after corrective action was performed. Majority of accumulated sediments were removed. Some fine sediments remain embedded in the asphalt.

UNITED STATES ENVIRONMENTAL PROTECTION AGENCY
WASHINGTON, DC20460

Annual Reporting Form

A. GENERAL INFORMATION

1. Facility Name:	Fleet Maintenance Facility		
Facility Physical Address:	1304 Enterprise Court Bel Air, MD 21014		
2. NPDES Permit Tracking No.:	MDR003747		
3. Lead Inspectors Name:	Richard Wise	Title:	Watershed Restoration Specialist III
Additional Inspectors Name(s):	David Wong		
4. Contact Person:	Tiffany Fitzpatrick	Title:	Fleet Administrator
Phone:	(410)638-3102 x7989	E-mail:	tfitzpatrick@harfordcountymd.gov
5. Inspection Date:	6/12/2025		

B. GENERAL INSPECTION FINDINGS

1. As part of this comprehensive site inspection, did you inspect all potential pollutant sources, including areas where industrial activity may be exposed to stormwater?

✓ YES NO

If NO, describe why not:

NOTE: *Complete Section C of this form for each industrial activity area inspected and included in your SWPPP or as newly identified in B.2 or B.3 below where pollutants may be exposed to stormwater.*

2. Did this inspection identify any stormwater or non-stormwater outfalls not previously identified in your SWPPP?

YES ✓ NO

If YES, for each location, describe the sources of those stormwater and non-stormwater discharges and any associated control measures in place:

3. Did this inspection identify any stormwater or non-stormwater discharges not previously identified in your SWPPP?

YES ✓ NO

If YES, for each location, describe the sources of those stormwater and non-stormwater discharges and any associated control measures in place:

4. Did you review stormwater monitoring data as part of this inspection to identify potential pollutant hot spots?

✓ YES NO NA, no monitoring performed

The quarterly visual monitoring reports and quarterly site facility inspection reports for the past four quarters were reviewed. No pollutant hot spots were identified or reported.

5. Describe any evidence of pollutants entering the drainage system or discharging to surface waters, and the condition of and around outfalls, including flow dissipation measures to prevent scouring.

The inspection was conducted during dry weather, four days after the most recent rain event. There was no evidence of pollutants entering the drainage system or discharging to surface waters.

6. Have you taken or do you plan to take any corrective actions, as specified in Part 3 of the permit, since your last annual report submission (or since you received authorization to discharge under this permit if this is your first annual report), including any corrective actions identified as a result of this annual comprehensive site inspection?

If YES, how many conditions requiring review for correction action as specified in Parts 3.1 and 3.2 were addressed by these corrective actions?

0 conditions require corrective actions

NOTE: *Complete the attached Corrective Action Form (Section D) for each condition identified, including any conditions identified as a result of this comprehensive stormwater inspection.*

C. INDUSTRIAL ACTIVITY AREA SPECIFIC FINDINGS

Complete one block for each industrial activity area where pollutants may be exposed to stormwater. Copy this page for additional industrial activity areas.

In reviewing each area, you should consider:

- Industrial materials, residue, or trash that may have or could come into contact with stormwater;
- Leaks or spills from industrial equipment, drums, tanks, and other containers;
- Offsite tracking of industrial or waste materials from areas of no exposure to exposed areas; and
- Tracking or blowing of raw, final, or waste materials from areas of no exposure to exposed areas.

INDUSTRIAL ACTIVITY AREA **1**:

1. Brief Description**:**

Vehicle Storage Area

2. Are any control measures in need of maintenance or repair?	YES	✓ NO
3. Have any control measures failed and require replacement?	YES	✓ NO
4. Are any additional/revised control measures necessary in this area?	YES	✓ NO

If YES to any of these three questions, provide a description of the problem: (Any necessary corrective actions should be described on the attached Corrective Action Form)

No issues observed at the vehicle storage area. The area was free of sheens and showed no evidence of any leaks or spills.

INDUSTRIAL ACTIVITY AREA **2**:

1. Brief Description**:**

Solid Waste Storage

2. Are any control measures in need of maintenance or repair?	YES	✓ NO
3. Have any control measures failed and require replacement?	YES	✓ NO
4. Are any additional/revised control measures necessary in this area?	YES	✓ NO

If YES to any of these three questions, provide a description of the problem: (Any necessary corrective actions should be described on the attached Corrective Action Form)

No issues observed at the solid waste storage area. The area was free of sheens and showed no evidence of any leaks or spills.

INDUSTRIAL ACTIVITY AREA **3**:

1. Brief Description**:**

Generator

2. Are any control measures in need of maintenance or repair?	YES	✓ NO
3. Have any control measures failed and require replacement?	YES	✓ NO
4. Are any additional/revised control measures necessary in this area?	YES	✓ NO

If YES to any of these three questions, provide a description of the problem: (Any necessary corrective actions should be described on the attached Corrective Action Form)

No issues observed at the generator. The area was free of sheens and showed no evidence of any leaks or spills.

INDUSTRIAL ACTIVITY AREA 4:

1. Brief Description**:**

Bus Maintenance

2. Are any control measures in need of maintenance or repair?	YES	✓ NO
3. Have any control measures failed and require replacement?	YES	✓ NO
4. Are any additional/revised control measures necessary in this area?	YES	✓ NO

If YES to any of these three questions, provide a description of the problem: (Any necessary corrective actions should be described on the attached Corrective Action Form)

No issues observed at the bus maintenance area. The area was free of sheens and showed no evidence of any leaks or spills.

INDUSTRIAL ACTIVITY AREA 5:
1. Brief Description**:**

Light Equipment Maintenance

2. Are any control measures in need of maintenance or repair?	YES	✓ NO
3. Have any control measures failed and require replacement?	YES	✓ NO
4. Are any additional/revised control measures necessary in this area?	YES	✓ NO

If YES to any of these three questions, provide a description of the problem: (Any necessary corrective actions should be described on the attached Corrective Action Form)

No issues observed at the light equipment maintenance area. The area was free of sheens and showed no evidence of any leaks or spills.

INDUSTRIAL ACTIVITY AREA 6:
1. Brief Description**:**

Fleet Maintenance Offices

2. Are any control measures in need of maintenance or repair?	YES	✓ NO
3. Have any control measures failed and require replacement?	YES	✓ NO
4. Are any additional/revised control measures necessary in this area?	YES	✓ NO

If YES to any of these three questions, provide a description of the problem: (Any necessary corrective actions should be described on the attached Corrective Action Form)

No issues observed at the fleet maintenance offices. The area was free of sheens and showed no evidence of any leaks or spills.

INDUSTRIAL ACTIVITY AREA 7:
1. Brief Description**:**

Heavy Equipment Maintenance

2. Are any control measures in need of maintenance or repair?	YES	✓ NO
3. Have any control measures failed and require replacement?	YES	✓ NO
4. Are any additional/revised control measures necessary in this area?	YES	✓ NO

If YES to any of these three questions, provide a description of the problem: (Any necessary corrective actions should be described on the attached Corrective Action Form)

No issues observed at the heavy equipment maintenance area. The area was free of sheens and showed no evidence of any leaks or spills.

INDUSTRIAL ACTIVITY AREA 8:
1. Brief Description**:**

Wash Bay

2. Are any control measures in need of maintenance or repair?	YES	✓ NO
3. Have any control measures failed and require replacement?	YES	✓ NO
4. Are any additional/revised control measures necessary in this area?	YES	✓ NO

If YES to any of these three questions, provide a description of the problem: (Any necessary corrective actions should be described on the attached Corrective Action Form)

No issues observed at the wash bay. The area was free of sheens and showed no evidence of any leaks or spills.

D. CORRECTIVE ACTIONS

Complete this page for each specific condition requiring a corrective action or a review determining that no corrective action is needed. Copy this page for additional corrective actions or reviews.

Include both corrective actions that have been initiated or completed since the last annual report, and future corrective actions needed to address problems identified in this comprehensive stormwater inspection. Include an update on any outstanding corrective actions that had not been completed at the time of your previous annual report.

1. Corrective Action for this reporting period.

   No corrective actions are required.

2. Is this corrective action:
   An update on a corrective action from a previous annual report; or
   A new corrective action?

3. Identify the condition(s) triggering the need for this review:
   Unauthorized release or discharge
   Numeric effluent limitation exceedance
   Control measures inadequate to meet applicable water quality standards
   Control measures inadequate to meet non-numeric effluent limitations
   Control measures not properly operated or maintained
   Change in facility operations necessitated change in control measures
   Average benchmark value exceedance
   Other (describe): _____

4. Briefly describe the nature of the problem identified:

5. Date problem identified:

6. How problem was identified:
   Comprehensive site inspection
   Quarterly visual assessment
   Routine facility inspection
   Benchmark monitoring
   Notification by EPA or State or local authorities
   Other (describe): _____

7. Description of corrective action(s) taken or to be taken to eliminate or further investigate the problem (e.g. describe modifications or repairs to control measures, analyses to be conducted, etc.) or if no modifications are needed, basis for that determination:

8. Did/will this corrective action require modification of your SWPPP? YES NO

9. Date corrective action initiated:

10. Date corrective action completed:

    Or expected to be completed:

11. If corrective action not yet completed, provide the status of corrective action at the time of the comprehensive site inspection and describe any remaining steps (including timeframes associated with each step) necessary to complete corrective action:

E. ANNUAL REPORT CERTIFICATION

1. Compliance Certification

Do you certify that your annual inspection has met the requirements of Part 4.2 of the permit, and that, based upon the results of this inspection, to the best of your knowledge, you are in compliance with the permit? ✓ YES NO

If NO, summarize why you are not in compliance with the permit:

2. Annual Report Certification

I certify under penalty of law that this document and all attachments were prepared under my direction or supervision in accordance with a system designed to assure that qualified personnel properly gathered and evaluated the information submitted. Based on my inquiry of the person or persons who manage the system, or those persons directly responsible for gathering the information, the information submitted is, to the best of my knowledge and belief, true, accurate, and complete. I am aware that there are significant penalties for submitting false information, including the possibility of fine and imprisonment for knowing violations.

Authorized Representative
Printed Name: Richard Wise Title: Watershed Restoration Specialist III

Signature: Richard Wise Date Signed: 6/12/2025

Fleet Maintenance Facility

1304 Enterprise Court
Bel Air, MD 21014

Inspection Date: June 12, 2025

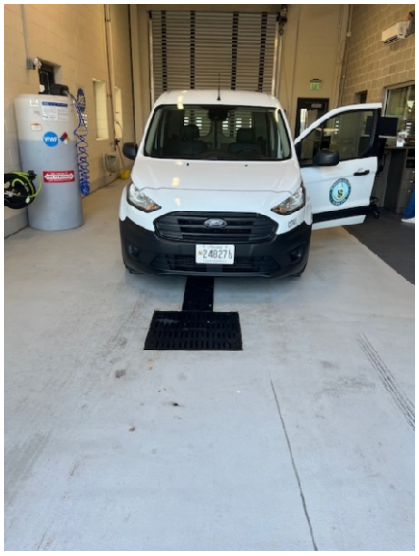

Vehicle Drop-Off for Cars and Pickups



Vehicle Drop-Off for Large Trucks and Buses

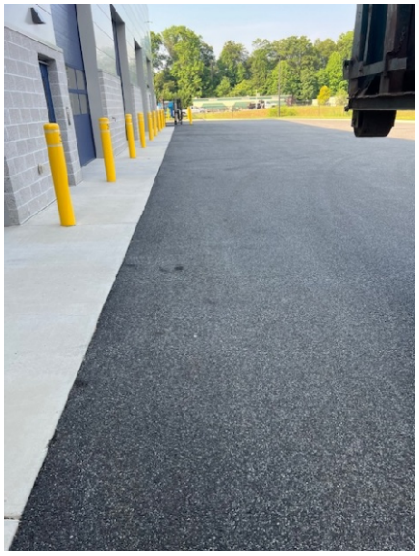

West Side of Heavy Equipment Garage Exterior



Submerged Gravel Wetland #1

Fleet Maintenance Facility

1304 Enterprise Court
Bel Air, MD 21014

Inspection Date: June 12, 2025



Vehicle Storage (Southeast of Wash Bay)



Vehicle Storage (Southeast of Wash Bay)



Vehicle Storage (Southeast of Wash Bay)



Vehicle Storage (Southeast of Wash Bay)

Fleet Maintenance Facility

1304 Enterprise Court
Bel Air, MD 21014

Inspection Date: June 12, 2025



Vehicle Storage (Southeast of Wash Bay)



Snowplows (Southwest of Wasy Bay)



Inlet at Southern end of Vehicle Storage Area



Stormdrain Manhole (Location of Outfall 001)

Fleet Maintenance Facility

1304 Enterprise Court
Bel Air, MD 21014

Inspection Date: June 12, 2025



Vehicle Storage Area (Southeast of Wash Bay)



Vehicle Storage Area (Southeast of Wash Bay)



Vehicle Storage Area (East of Wash Bay)



Vehicle Storage Area (East of Wash Bay)

Fleet Maintenance Facility

1304 Enterprise Court
Bel Air, MD 21014

Inspection Date: June 12, 2025



Vehicle Storage Area (East of Wash Bay)



Vehicle Storage Area (East of Wash Bay)



Vehicle Storage Area (East of Wash Bay)



Vehicle Storage Area (East of Wash Bay)

Fleet Maintenance Facility

1304 Enterprise Court
Bel Air, MD 21014

Inspection Date: June 12, 2025



Vehicle Storage Area (East of Wash Bay)



Vehicle Storage Area (East of Wash Bay)



Scrap Metal Dumpster with a Storm Top Dumpster Cover



Scrap Metal Dumpster with a Storm Top Dumpster Cover

Fleet Maintenance Facility

1304 Enterprise Court
Bel Air, MD 21014

Inspection Date: June 12, 2025



Dumpsters



Sample Location 001



Submerged Gravel Wetland #2



Vehicle Storage (East of Bus Maintenance Garage)

Fleet Maintenance Facility

1304 Enterprise Court
Bel Air, MD 21014

Inspection Date: June 12, 2025



Vehicle Storage (North of Bus Maintenance Garage)



Sample Location 002



Submerged Gravel Wetland #3



North Side of Exterior of Bus Maintenance Garage

Fleet Maintenance Facility

1304 Enterprise Court
Bel Air, MD 21014

Inspection Date: June 12, 2025

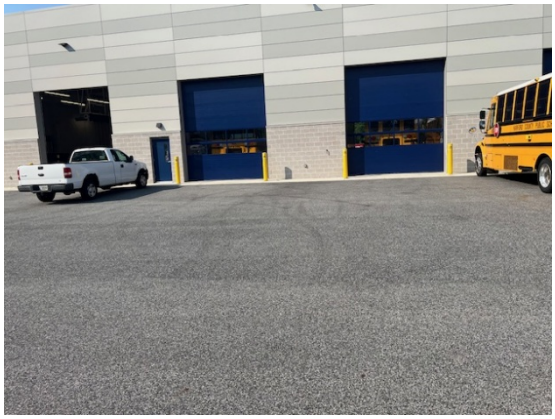

North Side of Exterior of Bus Maintenance Garage



North Side of Exterior of Bus Maintenance Garage



East Side of Exterior of Light Equipment Maintenance Garage



East Side of Exterior of Light Equipment Maintenance Garage

Fleet Maintenance Facility

1304 Enterprise Court
Bel Air, MD 21014

Inspection Date: June 12, 2025



Generator



West Side of Exterior of Light Equipment Maintenance Garage



West Side of Exterior of Light Equipment Maintenance Garage



Micro-Bioretention

UNITED STATES ENVIRONMENTAL PROTECTION AGENCY
WASHINGTON, DC20460

Annual Reporting Form

A. GENERAL INFORMATION

1. Facility Name:	Hickory II Highway Maintenance Facility		
Facility Physical Address:	1807 N. Fountain Green Road Bel Air, MD 21015		
2. NPDES Permit Tracking No.:	MDR001714		
3. Lead Inspectors Name:	Richard Wise	Title:	Watershed Restoration Specialist III
Additional Inspectors Name(s):	David Wong		
4. Contact Person:	Rich Burcham	Title:	Supervisor
Phone:	(410) 638-3279 x7948	E-mail:	rlburcham@harfordcountymd.gov
5. Inspection Date:	6/4/2025		

B. GENERAL INSPECTION FINDINGS

1. As part of this comprehensive site inspection, did you inspect all potential pollutant sources, including areas where industrial activity may be exposed to stormwater?

✓ YES NO

If NO, describe why not:

NOTE: *Complete Section C of this form for each industrial activity area inspected and included in your SWPPP or as newly identified in B.2 or B.3 below where pollutants may be exposed to stormwater.*

2. Did this inspection identify any stormwater or non-stormwater outfalls not previously identified in your SWPPP?

YES ✓ NO

If YES, for each location, describe the sources of those stormwater and non-stormwater discharges and any associated control measures in place:

3. Did this inspection identify any stormwater or non-stormwater discharges not previously identified in your SWPPP?

YES ✓ NO

If YES, for each location, describe the sources of those stormwater and non-stormwater discharges and any associated control measures in place:

4. Did you review stormwater monitoring data as part of this inspection to identify potential pollutant hot spots?

✓ YES NO NA, no monitoring performed

The quarterly visual monitoring reports and quarterly site facility inspection reports for the past four quarters were reviewed. No pollutant hot spots were identified or reported.

5. Describe any evidence of pollutants entering the drainage system or discharging to surface waters, and the condition of and around outfalls, including flow dissipation measures to prevent scouring.

The inspection was conducted during dry weather, four days after the most recent rain event. There was no evidence of pollutants entering the drainage system or discharging to surface waters. The outfall was in good condition.

6. Have you taken or do you plan to take any corrective actions, as specified in Part 3 of the permit, since your last annual report submission (or since you received authorization to discharge under this permit if this is your first annual report), including any corrective actions identified as a result of this annual comprehensive site inspection?

If YES, how many conditions requiring review for correction action as specified in Parts 3.1 and 3.2 were addressed by these corrective actions?

1 condition requires corrective action

NOTE: *Complete the attached Corrective Action Form (Section D) for each condition identified, including any conditions identified as a result of this comprehensive stormwater inspection.*

C. INDUSTRIAL ACTIVITY AREA SPECIFIC FINDINGS

Complete one block for each industrial activity area where pollutants may be exposed to stormwater. Copy this page for additional industrial activity areas.

In reviewing each area, you should consider:

- Industrial materials, residue, or trash that may have or could come into contact with stormwater;
- Leaks or spills from industrial equipment, drums, tanks, and other containers;
- Offsite tracking of industrial or waste materials from areas of no exposure to exposed areas; and
- Tracking or blowing of raw, final, or waste materials from areas of no exposure to exposed areas.

INDUSTRIAL ACTIVITY AREA **1**:

1. Brief Description**:**

Fueling Area

2. Are any control measures in need of maintenance or repair?	YES	✓ NO
3. Have any control measures failed and require replacement?	YES	✓ NO
4. Are any additional/revised control measures necessary in this area?	YES	✓ NO

If YES to any of these three questions, provide a description of the problem: (Any necessary corrective actions should be described on the attached Corrective Action Form)

No issues observed at the fueling area. The area was free of sheens and showed no evidence of any leaks or spills.

INDUSTRIAL ACTIVITY AREA **2**:

1. Brief Description**:**

DEF Tank & Dispenser

2. Are any control measures in need of maintenance or repair?	YES	✓ NO
3. Have any control measures failed and require replacement?	YES	✓ NO
4. Are any additional/revised control measures necessary in this area?	YES	✓ NO

If YES to any of these three questions, provide a description of the problem: (Any necessary corrective actions should be described on the attached Corrective Action Form)

No issues observed at the DEF tank and dispensers. The area was free of sheens and showed no evidence of any leaks or spills.

INDUSTRIAL ACTIVITY AREA **3**:

1. Brief Description**:**

Generators

2. Are any control measures in need of maintenance or repair?	YES	✓ NO
3. Have any control measures failed and require replacement?	YES	✓ NO
4. Are any additional/revised control measures necessary in this area?	YES	✓ NO

If YES to any of these three questions, provide a description of the problem: (Any necessary corrective actions should be described on the attached Corrective Action Form)

No issues observed at the generators. The area were free of sheens and showed no evidence of any leaks or spills.

INDUSTRIAL ACTIVITY AREA 4:

1. Brief Description**:**

Vehicle & Equipment Parking Areas

2. Are any control measures in need of maintenance or repair?	YES	✓ NO
3. Have any control measures failed and require replacement?	YES	✓ NO
4. Are any additional/revised control measures necessary in this area?	YES	✓ NO

If YES to any of these three questions, provide a description of the problem: (Any necessary corrective actions should be described on the attached Corrective Action Form)

No issues observed at the vehicle and equipment parking areas. The areas were free of sheens and showed no evidence of any leaks or spills.

INDUSTRIAL ACTIVITY AREA 5:

1. Brief Description**:**

Covered Storage Areas

2. Are any control measures in need of maintenance or repair?	YES	✓ NO
3. Have any control measures failed and require replacement?	YES	✓ NO
4. Are any additional/revised control measures necessary in this area?	YES	✓ NO

If YES to any of these three questions, provide a description of the problem: (Any necessary corrective actions should be described on the attached Corrective Action Form)

No issues observed at the covered storage areas. The areas were free of sheens and showed no evidence of any leaks or spills.

INDUSTRIAL ACTIVITY AREA 6:

1. Brief Description**:**

Dumpster Area

2. Are any control measures in need of maintenance or repair?	YES	✓ NO
3. Have any control measures failed and require replacement?	YES	✓ NO
4. Are any additional/revised control measures necessary in this area?	YES	✓ NO

If YES to any of these three questions, provide a description of the problem: (Any necessary corrective actions should be described on the attached Corrective Action Form)

No issues observed at the dumpster area. The area was free of sheens and showed no evidence of any leaks or spills.

INDUSTRIAL ACTIVITY AREA 7:

1. Brief Description**:**

Salt Domes

2. Are any control measures in need of maintenance or repair?	YES	✓ NO
3. Have any control measures failed and require replacement?	YES	✓ NO
4. Are any additional/revised control measures necessary in this area?	YES	✓ NO

If YES to any of these three questions, provide a description of the problem: (Any necessary corrective actions should be described on the attached Corrective Action Form)

There was minor salt leaching evident at the northernmost salt dome. The asphalt berm was in good condition and there were no piles of salt located outside the salt dome.

INDUSTRIAL ACTIVITY AREA 8:

1. Brief Description**:**

Stockpile Area

2. Are any control measures in need of maintenance or repair?	YES	✓ NO
3. Have any control measures failed and require replacement?	YES	✓ NO
4. Are any additional/revised control measures necessary in this area?	YES	✓ NO

If YES to any of these three questions, provide a description of the problem: (Any necessary corrective actions should be described on the attached Corrective Action Form)

No issues observed at the stockpile area. The area was free of sheens and showed no evidence of any leaks or spills.

INDUSTRIAL ACTIVITY AREA 9:
5. Brief Description**:**

Maintenance Garage

6. Are any control measures in need of maintenance or repair?	YES	✓ NO
7. Have any control measures failed and require replacement?	YES	✓ NO
8. Are any additional/revised control measures necessary in this area?	✓ YES	NO

If YES to any of these three questions, provide a description of the problem: (Any necessary corrective actions should be described on the attached Corrective Action Form)

A 55-gallon drum containing yellow traffic paint was found behind the Maintenance Garage. The drum was covered by an unsecured lid, leaving a slight gap between the lid and drum. There was evidence of washing taking place in this area. The area near the drums was damp and the water in the nearby inlet was cloudy and white.

INDUSTRIAL ACTIVITY AREA 10:
5. Brief Description**:**

Washbay

6. Are any control measures in need of maintenance or repair?	YES	✓ NO
7. Have any control measures failed and require replacement?	YES	✓ NO
8. Are any additional/revised control measures necessary in this area?	YES	✓ NO

If YES to any of these three questions, provide a description of the problem: (Any necessary corrective actions should be described on the attached Corrective Action Form)

No issues observed at the washbay. The area was free of sheens and showed no evidence of any leaks or spills.

INDUSTRIAL ACTIVITY AREA 11:
5. Brief Description**:**

Administrative Offices

6. Are any control measures in need of maintenance or repair?	YES	✓ NO
7. Have any control measures failed and require replacement?	YES	✓ NO
8. Are any additional/revised control measures necessary in this area?	YES	✓ NO

If YES to any of these three questions, provide a description of the problem: (Any necessary corrective actions should be described on the attached Corrective Action Form)

No issues observed at the administrative office area. The area was free of sheens and showed no evidence of any leaks or spills.

INDUSTRIAL ACTIVITY AREA 12:
5. Brief Description**:**

Leachate Tank

6. Are any control measures in need of maintenance or repair?	YES	✓ NO
7. Have any control measures failed and require replacement?	YES	✓ NO
8. Are any additional/revised control measures necessary in this area?	YES	✓ NO

If YES to any of these three questions, provide a description of the problem: (Any necessary corrective actions should be described on the attached Corrective Action Form)

No issues observed at the leachate tank. The area was free of sheens and showed no evidence of any leaks or spills.

D. CORRECTIVE ACTIONS

Complete this page for each specific condition requiring a corrective action or a review determining that no corrective action is needed. Copy this page for additional corrective actions or reviews.

Include both corrective actions that have been initiated or completed since the last annual report, and future corrective actions needed to address problems identified in this comprehensive stormwater inspection. Include an update on any outstanding corrective actions that had not been completed at the time of your previous annual report.

1. Corrective Action **1 of 1** for this reporting period.

2. Is this corrective action:
   - An update on a corrective action from a previous annual report; or
   - ✓ A new corrective action?

3. Identify the condition(s) triggering the need for this review:
   - Unauthorized release or discharge
   - Numeric effluent limitation exceedance
   - Control measures inadequate to meet applicable water quality standards
   - Control measures inadequate to meet non-numeric effluent limitations
   - ✓ Control measures not properly operated or maintained
   - Change in facility operations necessitated change in control measures
   - Average benchmark value exceedance
   - Other (describe): _____

4. Briefly describe the nature of the problem identified:

   A 55-gallon drum containing yellow traffic paint was found behind the Maintenance Garage. The drum was covered by an unsecured lid, leaving a slight gap between the lid and drum. There was evidence of washing taking place in this area. The area near the drums was damp and the water in the nearby inlet was cloudy and white.

5. Date problem identified: **06/04/2025**

6. How problem was identified:
   - ✓ Comprehensive site inspection
   - Quarterly visual assessment
   - Routine facility inspection
   - Benchmark monitoring
   - Notification by EPA or State or local authorities
   - Other (describe): _____

7. Description of corrective action(s) taken or to be taken to eliminate or further investigate the problem (e.g. describe modifications or repairs to control measures, analyses to be conducted, etc.) or if no modifications are needed, basis for that determination:

   The 55-gallon drum containing the paint should be covered with a secured lid or tarp to prevent stormwater contamination. Washing in the area should not take place due to enhanced risk of stormwater contamination.

8. Did/will this corrective action require modification of your SWPPP? YES ✓ NO

9. Date corrective action initiated: **06/04/2025**

10. Date corrective action completed: **06/19/2025**

    Or expected to be completed: **08/27/2025**

11. If corrective action not yet completed, provide the status of corrective action at the time of the comprehensive site inspection and describe any remaining steps (including timeframes associated with each step) necessary to complete corrective action:

    The issue was observed during the comprehensive annual site inspection on 06/04/2025.
    Corrective action recommended to Supervisor on 06/04/2025.
    Corrective action completed on 06/19/2025. Drums containing paint have been removed and will be stored indoors going forward.

E. ANNUAL REPORT CERTIFICATION

1. Compliance Certification

Do you certify that your annual inspection has met the requirements of Part 4.2 of the permit, and that, based upon the results of this inspection, to the best of your knowledge, you are in compliance with the permit? ✓ YES NO

If NO, summarize why you are not in compliance with the permit:

2. Annual Report Certification

I certify under penalty of law that this document and all attachments were prepared under my direction or supervision in accordance with a system designed to assure that qualified personnel properly gathered and evaluated the information submitted. Based on my inquiry of the person or persons who manage the system, or those persons directly responsible for gathering the information, the information submitted is, to the best of my knowledge and belief, true, accurate, and complete. I am aware that there are significant penalties for submitting false information, including the possibility of fine and imprisonment for knowing violations.

Authorized Representative
Printed Name: Richard Wise Title: Watershed Restoration Specialist III

Signature: Richard Wise Date Signed: 06/04/2025

Hickory II Highway Maintenance Facility

1807 N. Fountain Green Road
Bel Air, MD 21015

Inspection Date: June 4, 2025



Generator Located North of Administrative Offices



North Side of Northern Maintenance Garage



55-Gallon Drums with Unsecured Lids

NOTE: The 55-gallon drum containing the paint should be covered with a secured lid or tarp to prevent stormwater contamination.



Unsecured Drum Containing Yellow Traffic Paint

NOTE: The 55-gallon drum containing the paint should be covered with a secured lid or tarp to prevent stormwater contamination.

Hickory II Highway Maintenance Facility

1807 N. Fountain Green Road
Bel Air, MD 21015

Inspection Date: June 4, 2025



Inlet between Paint Drums and Maintenance Garage with Evidence of Contamination



Evidence of Washing near Location of Paint Drums

NOTE: Washing in the area should not take place due to enhanced risk of stormwater contamination.



Northernmost Salt Dome with Evidence of Minor Leaching



Southernmost Salt Dome

Hickory II Highway Maintenance Facility

1807 N. Fountain Green Road
Bel Air, MD 21015

Inspection Date: June 4, 2025



Material Storage



Straw Bales Located at Northeastern Corner of Facility



Stockpile Area



Stockpile Area

Hickory II Highway Maintenance Facility

1807 N. Fountain Green Road
Bel Air, MD 21015

Inspection Date: June 4, 2025



Wood Spoils



Concrete Spoils



Sediment Spoils



Stockpile

Hickory II Highway Maintenance Facility

1807 N. Fountain Green Road
Bel Air, MD 21015

Inspection Date: June 4, 2025



Stockpile



Stockpile



Stockpile



Stockpile

Hickory II Highway Maintenance Facility

1807 N. Fountain Green Road
Bel Air, MD 21015

Inspection Date: June 4, 2025



Stockpile



Stockpile



Stockpile



Stockpile

Hickory II Highway Maintenance Facility

1807 N. Fountain Green Road
Bel Air, MD 21015

Inspection Date: June 4, 2025



Recycling Materials Dumpster



Trash Materials Dumpster



Generator Located North of Covered Storage Area and South of Maintenance Garage



Covered Storage

Hickory II Highway Maintenance Facility

1807 N. Fountain Green Road
Bel Air, MD 21015

Inspection Date: June 4, 2025



Covered Storage



Covered Storage



Covered Storage



Covered Storage

Hickory II Highway Maintenance Facility

1807 N. Fountain Green Road
Bel Air, MD 21015

Inspection Date: June 4, 2025

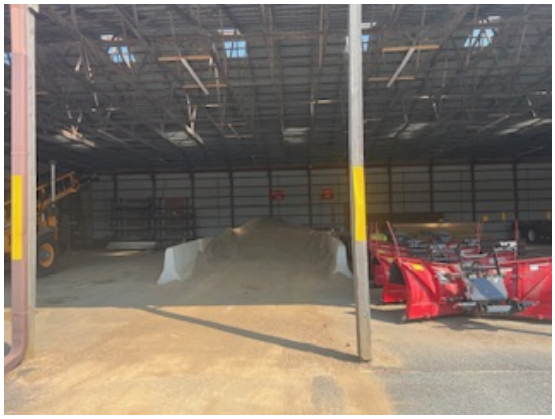

Covered Storage

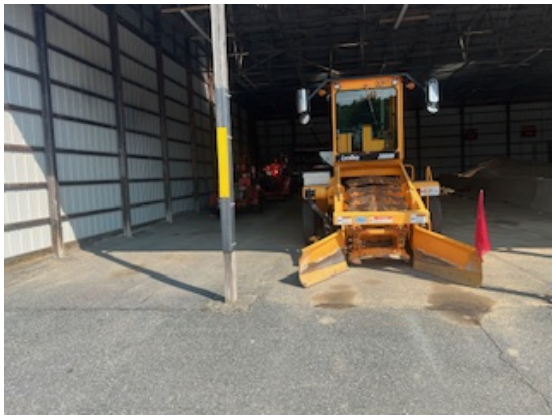

Covered Storage



Vehicle & Equipment Parking



Vehicle & Equipment Parking

Hickory II Highway Maintenance Facility

1807 N. Fountain Green Road
Bel Air, MD 21015

Inspection Date: June 4, 2025



Vehicle & Equipment Parking



Discharge Pipe from Maintenance Facility Inlets into Stormwater Management Pond



Stormwater Management Pond



Stormwater Management Pond

Hickory II Highway Maintenance Facility

1807 N. Fountain Green Road
Bel Air, MD 21015

Inspection Date: June 4, 2025



Discharge Pipe from Fueling Area Inlets into Stormwater Management Pond



Outfall 001



Southeastern Side of Southern Maintenance Garage



South-central Side of Southern Maintenance Garage

Hickory II Highway Maintenance Facility

1807 N. Fountain Green Road
Bel Air, MD 21015

Inspection Date: June 4, 2025



Southwestern Side of Southern Maintenance Garage



Generator Located South of Southeastern Corner of South Maintenance Garage



Oil / Water Separator Located at Fueling Area



Fueling Area

Hickory II Highway Maintenance Facility

1807 N. Fountain Green Road
Bel Air, MD 21015

Inspection Date: June 4, 2025



Fueling Area



Fueling Area



Fueling Area

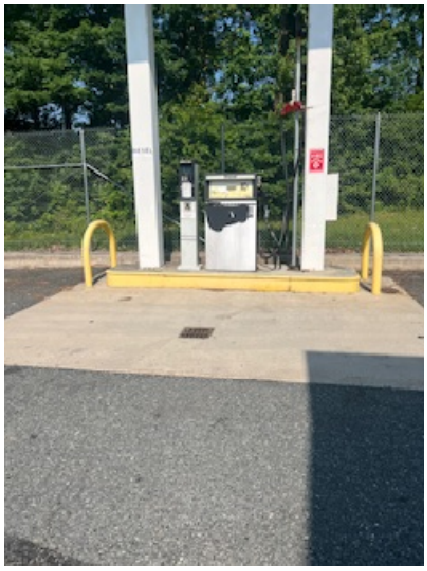

Fueling Area

Hickory II Highway Maintenance Facility

1807 N. Fountain Green Road
Bel Air, MD 21015

Inspection Date: June 4, 2025



DEF Tank and Dispensers

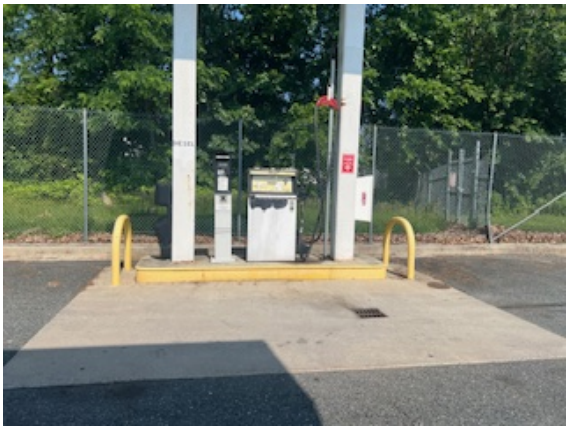

Fueling Area



One of Three Spill Kits Maintained at Fueling Area



Generator Located on North Side of Fueling Area

Hickory II Highway Maintenance Facility

1807 N. Fountain Green Road
Bel Air, MD 21015

Inspection Date: June 4, 2025



Fueling Area Stormceptor



Leachate Tank



Leachate Tank



Leachate Tank

Hickory II Highway Maintenance Facility

1807 N. Fountain Green Road
Bel Air, MD 21015

Inspection Date: June 4, 2025



Snowplows Located North of Leachate Tank



Snowplows Located North of Leachate Tank



North Side of Wash Bay



Paint Drums Removed

Hickory II Highway Maintenance Facility

1807 N. Fountain Green Road
Bel Air, MD 21015

Inspection Date: June 4, 2025



Paint Drums Removed



Paint Drums Removed

UNITED STATES ENVIRONMENTAL PROTECTION AGENCY
WASHINGTON, DC20460

Annual Reporting Form

A. GENERAL INFORMATION

1. Facility Name:	Jarrettsville Highway Maintenance Facility		
Facility Physical Address:	1348 Cooptown Road Forest Hill, MD 21050		
2. NPDES Permit Tracking No.:	MDR002474		
3. Lead Inspectors Name:	Richard Wise	Title:	Watershed Restoration Specialist III
Additional Inspectors Name(s):			
4. Contact Person:	William Williams	Title:	Supervisor
Phone:	(410)692-7878 x7686	E-mail:	wpwilliams@harfordcountymd.gov
5. Inspection Date:	5/30/2025		

B. GENERAL INSPECTION FINDINGS

1. As part of this comprehensive site inspection, did you inspect all potential pollutant sources, including areas where industrial activity may be exposed to stormwater?

✓ YES NO

If NO, describe why not:

NOTE: *Complete Section C of this form for each industrial activity area inspected and included in your SWPPP or as newly identified in B.2 or B.3 below where pollutants may be exposed to stormwater.*

2. Did this inspection identify any stormwater or non-stormwater outfalls not previously identified in your SWPPP?

YES ✓ NO

If YES, for each location, describe the sources of those stormwater and non-stormwater discharges and any associated control measures in place:

3. Did this inspection identify any stormwater or non-stormwater discharges not previously identified in your SWPPP?

YES ✓ NO

If YES, for each location, describe the sources of those stormwater and non-stormwater discharges and any associated control measures in place:

4. Did you review stormwater monitoring data as part of this inspection to identify potential pollutant hot spots?

✓ YES NO NA, no monitoring performed

The quarterly visual monitoring reports and quarterly site facility inspection reports for the past four quarters were reviewed. No pollutant hot spots were identified or reported.

5. Describe any evidence of pollutants entering the drainage system or discharging to surface waters, and the condition of and around outfalls, including flow dissipation measures to prevent scouring.

The inspection was conducted during dry weather, approximately 30 hours after a significant rain event. Sediment leaching from accumulated gravel, dirt and CR8 stone observed near salt barn. Evidence of leached sediment from the accumulated gravel, dirt and CR8 pile to a nearby inlet and at the sediment forebay prior to the stormwater pond. No evidence of sediment leaching beyond the forebay.

6. Have you taken or do you plan to take any corrective actions, as specified in Part 3 of the permit, since your last annual report submission (or since you received authorization to discharge under this permit if this is your first annual report), including any corrective actions identified as a result of this annual comprehensive site inspection?

If YES, how many conditions requiring review for correction action as specified in Parts 3.1 and 3.2 were addressed by these corrective actions?

2 conditions require corrective actions

NOTE: *Complete the attached Corrective Action Form (Section D) for each condition identified, including any conditions identified as a result of this comprehensive stormwater inspection.*

C. INDUSTRIAL ACTIVITY AREA SPECIFIC FINDINGS

Complete one block for each industrial activity area where pollutants may be exposed to stormwater. Copy this page for additional industrial activity areas.

In reviewing each area, you should consider:

- Industrial materials, residue, or trash that may have or could come into contact with stormwater;
- Leaks or spills from industrial equipment, drums, tanks, and other containers;
- Offsite tracking of industrial or waste materials from areas of no exposure to exposed areas; and
- Tracking or blowing of raw, final, or waste materials from areas of no exposure to exposed areas.

INDUSTRIAL ACTIVITY AREA **1**:

1. Brief Description**:**

Administrative Offices

2. Are any control measures in need of maintenance or repair?	YES	✓ NO
3. Have any control measures failed and require replacement?	YES	✓ NO
4. Are any additional/revised control measures necessary in this area?	YES	✓ NO

If YES to any of these three questions, provide a description of the problem: (Any necessary corrective actions should be described on the attached Corrective Action Form)

No issues observed at the fueling area. The area was free of sheens and showed no evidence of any leaks or spills.

INDUSTRIAL ACTIVITY AREA **2**:

1. Brief Description**:**

Maintenance Garage

2. Are any control measures in need of maintenance or repair?	YES	✓ NO
3. Have any control measures failed and require replacement?	YES	✓ NO
4. Are any additional/revised control measures necessary in this area?	✓ YES	NO

If YES to any of these three questions, provide a description of the problem: (Any necessary corrective actions should be described on the attached Corrective Action Form)

Scrap metal pile observed behind the maintenance garage near Garage Door #8.

INDUSTRIAL ACTIVITY AREA **3**:

1. Brief Description**:**

Wash Bay

2. Are any control measures in need of maintenance or repair?	YES	✓ NO
3. Have any control measures failed and require replacement?	YES	✓ NO
4. Are any additional/revised control measures necessary in this area?	YES	✓ NO

If YES to any of these three questions, provide a description of the problem: (Any necessary corrective actions should be described on the attached Corrective Action Form)

No issues observed at the fueling area. The area was free of sheens and showed no evidence of any leaks or spills.

INDUSTRIAL ACTIVITY AREA 4:

1. Brief Description**:**

Generator

2. Are any control measures in need of maintenance or repair?	YES	✓ NO
3. Have any control measures failed and require replacement?	YES	✓ NO
4. Are any additional/revised control measures necessary in this area?	YES	✓ NO

If YES to any of these three questions, provide a description of the problem: (Any necessary corrective actions should be described on the attached Corrective Action Form)

No issues observed at the fueling area. The area was free of sheens and showed no evidence of any leaks or spills.

INDUSTRIAL ACTIVITY AREA 5:

1. Brief Description**:**

Fueling Area

2. Are any control measures in need of maintenance or repair?	YES	✓ NO
3. Have any control measures failed and require replacement?	YES	✓ NO
4. Are any additional/revised control measures necessary in this area?	YES	✓ NO

If YES to any of these three questions, provide a description of the problem: (Any necessary corrective actions should be described on the attached Corrective Action Form)

No issues observed at the fueling area. The area was free of sheens and showed no evidence of any leaks or spills.

INDUSTRIAL ACTIVITY AREA 6:

1. Brief Description**:**

Salt Brine Tank

2. Are any control measures in need of maintenance or repair?	YES	✓ NO
3. Have any control measures failed and require replacement?	YES	✓ NO
4. Are any additional/revised control measures necessary in this area?	YES	✓ NO

If YES to any of these three questions, provide a description of the problem: (Any necessary corrective actions should be described on the attached Corrective Action Form)

No issues observed at the fueling area. The area was free of sheens and showed no evidence of any leaks or spills.

INDUSTRIAL ACTIVITY AREA 7:

1. Brief Description**:**

Vehicle & Equipment Parking

2. Are any control measures in need of maintenance or repair?	YES	✓ NO
3. Have any control measures failed and require replacement?	YES	✓ NO
4. Are any additional/revised control measures necessary in this area?	YES	✓ NO

If YES to any of these three questions, provide a description of the problem: (Any necessary corrective actions should be described on the attached Corrective Action Form)

No issues observed at the fueling area. The area was free of sheens and showed no evidence of any leaks or spills.

INDUSTRIAL ACTIVITY AREA 8:

1. Brief Description**:**

Salt Domes

2. Are any control measures in need of maintenance or repair?	YES	✓ NO
3. Have any control measures failed and require replacement?	YES	✓ NO
4. Are any additional/revised control measures necessary in this area?	✓ YES	NO

If YES to any of these three questions, provide a description of the problem: (Any necessary corrective actions should be described on the attached Corrective Action Form)

Sediment leaching from accumulated gravel, dirt and CR8 stone observed near salt barn. Evidence of leached sediment from the accumulated gravel, dirt and CR8 pile to a nearby inlet and at the sediment forebay prior to the stormwater pond. No evidence of sediment leaching beyond the forebay.

INDUSTRIAL ACTIVITY AREA 9:

1. Brief Description**:**

Stockpile Area

2. Are any control measures in need of maintenance or repair?	YES	✓ NO
3. Have any control measures failed and require replacement?	YES	✓ NO
4. Are any additional/revised control measures necessary in this area?	YES	✓ NO

If YES to any of these three questions, provide a description of the problem: (Any necessary corrective actions should be described on the attached Corrective Action Form)

No issues observed at the fueling area. The area was free of sheens and showed no evidence of any leaks or spills.

D. CORRECTIVE ACTIONS

Complete this page for each specific condition requiring a corrective action or a review determining that no corrective action is needed. Copy this page for additional corrective actions or reviews.

Include both corrective actions that have been initiated or completed since the last annual report, and future corrective actions needed to address problems identified in this comprehensive stormwater inspection. Include an update on any outstanding corrective actions that had not been completed at the time of your previous annual report.

1. Corrective Action **1 of 2** for this reporting period.

2. Is this corrective action:
   - An update on a corrective action from a previous annual report; or
   - ✓ A new corrective action?

3. Identify the condition(s) triggering the need for this review:
   - Unauthorized release or discharge
   - Numeric effluent limitation exceedance
   - Control measures inadequate to meet applicable water quality standards
   - Control measures inadequate to meet non-numeric effluent limitations
   - ✓ Control measures not properly operated or maintained
   - Change in facility operations necessitated change in control measures
   - Average benchmark value exceedance
   - Other (describe): _____

4. Briefly describe the nature of the problem identified:

   Scrap metal pile observed behind the maintenance garage near Garage Door #8.

5. Date problem identified: **05/30/2025**

6. How problem was identified:
   - ✓ Comprehensive site inspection
   - Quarterly visual assessment
   - Routine facility inspection
   - Benchmark monitoring
   - Notification by EPA or State or local authorities
   - Other (describe): _____

7. Description of corrective action(s) taken or to be taken to eliminate or further investigate the problem (e.g. describe modifications or repairs to control measures, analyses to be conducted, etc.) or if no modifications are needed, basis for that determination:

   The scrap metal should be removed and either placed under cover or in an appropriate container prior to its disposal to prevent stormwater contamination and potential heavy metals discharge into surface waters during precipitation events.

8. Did/will this corrective action require modification of your SWPPP? YES ✓ NO

9. Date corrective action initiated: **05/30/2025**

10. Date corrective action completed: **07/02/2025**

    Or expected to be completed: **08/22/2025**

11. If corrective action not yet completed, provide the status of corrective action at the time of the comprehensive site inspection and describe any remaining steps (including timeframes associated with each step) necessary to complete corrective action:

    The issue was observed during the comprehensive annual site inspection on 05/30/2025.
    Corrective action recommended to Supervisor on 05/30/2025.
    Corrective action completed on 07/02/2025. Scrap metal has been picked up by a contractor.

D. CORRECTIVE ACTIONS

Complete this page for each specific condition requiring a corrective action or a review determining that no corrective action is needed. Copy this page for additional corrective actions or reviews.

Include both corrective actions that have been initiated or completed since the last annual report, and future corrective actions needed to address problems identified in this comprehensive stormwater inspection. Include an update on any outstanding corrective actions that had not been completed at the time of your previous annual report.

1. Corrective Action **2 of 2** for this reporting period.

2. Is this corrective action:
   - An update on a corrective action from a previous annual report; or
   - ✓ A new corrective action?

3. Identify the condition(s) triggering the need for this review:
   - Unauthorized release or discharge
   - Numeric effluent limitation exceedance
   - Control measures inadequate to meet applicable water quality standards
   - Control measures inadequate to meet non-numeric effluent limitations
   - ✓ Control measures not properly operated or maintained
   - Change in facility operations necessitated change in control measures
   - Average benchmark value exceedance
   - Other (describe): _____

4. Briefly describe the nature of the problem identified:

   Sediment leaching from accumulated gravel, dirt and CR8 stone observed near salt barn. Evidence of leached sediment from the accumulated gravel, dirt and CR8 pile to a nearby inlet and at the sediment forebay prior to the stormwater pond. No evidence of sediment leaching beyond the forebay.

5. Date problem identified: **05/30/2025**

6. How problem was identified:
   - ✓ Comprehensive site inspection
   - Quarterly visual assessment
   - Routine facility inspection
   - Benchmark monitoring
   - Notification by EPA or State or local authorities
   - Other (describe): _____

7. Description of corrective action(s) taken or to be taken to eliminate or further investigate the problem (e.g. describe modifications or repairs to control measures, analyses to be conducted, etc.) or if no modifications are needed, basis for that determination:

   Shovel and sweep up the accumulated gravel, sediment and CR8 located near the lower inlet by the salt barns and dispose of properly. Remove accumulated sediment from the sediment forebay and dispose of properly before it has a chance to enter the stormwater pond and be discharged at Outfall 001.

8. Did/will this corrective action require modification of your SWPPP? YES ✓ NO

9. Date corrective action initiated: **05/30/2025**

10. Date corrective action completed: **07/02/2025**

    Or expected to be completed: **08/22/2025**

11. If corrective action not yet completed, provide the status of corrective action at the time of the comprehensive site inspection and describe any remaining steps (including timeframes associated with each step) necessary to complete corrective action:

    The issue was observed during the comprehensive annual site inspection on 05/30/2025.
    Corrective action recommended to Supervisor on 05/30/2025.
    Corrective action completed on 07/02/2025. Sediment removed from stormwater inlet and plunge pool and disposed of properly.

E. ANNUAL REPORT CERTIFICATION

1. Compliance Certification

Do you certify that your annual inspection has met the requirements of Part 4.2 of the permit, and that, based upon the results of this inspection, to the best of your knowledge, you are in compliance with the permit? ✓ YES NO

If NO, summarize why you are not in compliance with the permit:

2. Annual Report Certification

I certify under penalty of law that this document and all attachments were prepared under my direction or supervision in accordance with a system designed to assure that qualified personnel properly gathered and evaluated the information submitted. Based on my inquiry of the person or persons who manage the system, or those persons directly responsible for gathering the information, the information submitted is, to the best of my knowledge and belief, true, accurate, and complete. I am aware that there are significant penalties for submitting false information, including the possibility of fine and imprisonment for knowing violations.

Authorized Representative
Printed Name: Richard Wise Title: Watershed Restoration Specialist III

Signature: Richard Wise Date Signed: 05/30/2025

Jarrettsville Highway Maintenance Facility

1348 Cooptown Road
Forest Hill, MD 21050

Inspection Date: May 30, 2025

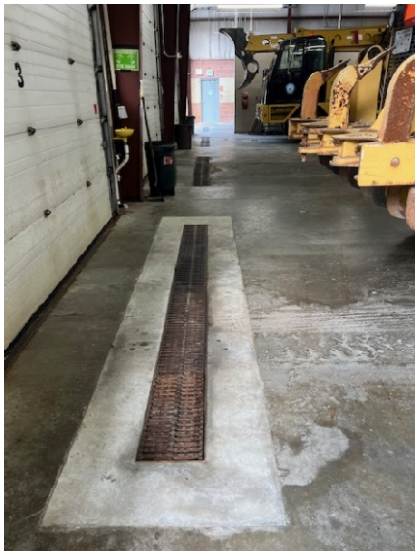

Maintenance Garage Interior Drains

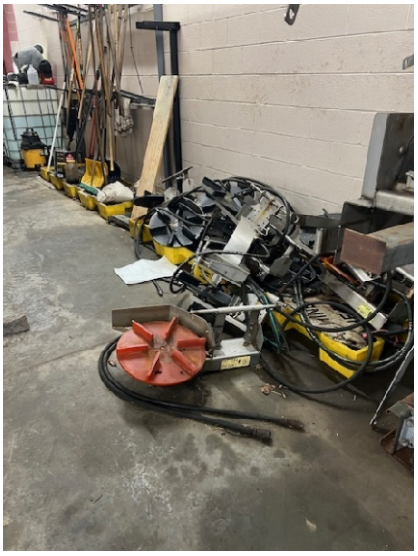

Equipment on Spill Containment Pallets in Maintenance Garage

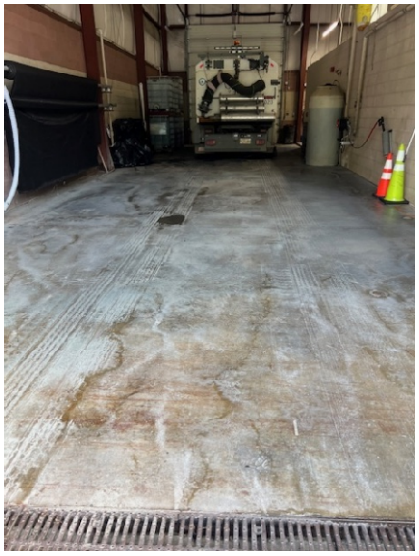

Wash Bay Interior



Parking Lot Outside of Administrative Offices

Jarrettsville Highway Maintenance Facility

1348 Cooptown Road
Forest Hill, MD 21050

Inspection Date: May 30, 2025



West Side of Administrative Offices



South Side of Maintenance Garage Exterior



South Side of Maintenance Garage Exterior



South Side of Wash Bay Exterior

Jarrettsville Highway Maintenance Facility

1348 Cooptown Road
Forest Hill, MD 21050

Inspection Date: May 30, 2025



Vehicle & Equipment Parking – West of Wash Bay



Vehicle & Equipment Parking – North of Wash Bay



Vehicle & Equipment Parking – North of Maintenance Garage and Administrative Offices



Vehicle & Equipment Parking – North of Maintenance Garage and Administrative Offices

Jarrettsville Highway Maintenance Facility

1348 Cooptown Road
Forest Hill, MD 21050

Inspection Date: May 30, 2025



North Side of Wash Bay Exterior



Scrap Metal Located Near Garage Door 8 on North Side of Maintenance Garage

Note: Scrap metal should be moved under cover or placed inside of appropriate container prior to removal for disposal.



Vehicle & Equipment Parking – North of the Maintenance Garage and Administrative Offices



Parking Lot – East of Administrative Offices

Jarrettsville Highway Maintenance Facility

1348 Cooptown Road
Forest Hill, MD 21050

Inspection Date: May 30, 2025



Salt Brine Tank



Fueling Area



Generator



Lower Inlet near Salt Dome

Note: Evidence of sediment leaching. Shovel and sweep up the accumulated material next to the stormwater inlet and dispose of properly.

Jarrettsville Highway Maintenance Facility

1348 Cooptown Road
Forest Hill, MD 21050

Inspection Date: May 30, 2025



Accumulated Sediment, Gravel & Dirt

Note: Evidence of sediment leaching. Shovel and sweep up the accumulated material next to the stormwater inlet and dispose of properly.



Westernmost Salt Dome



Easternmost Salt Dome



Slate Spoils

Jarrettsville Highway Maintenance Facility

1348 Cooptown Road
Forest Hill, MD 21050

Inspection Date: May 30, 2025



Wood Spoils



Stockpile Area



Stockpile Area



Stockpile Area

Jarrettsville Highway Maintenance Facility

1348 Cooptown Road
Forest Hill, MD 21050

Inspection Date: May 30, 2025



Stockpile Area



Stockpile Area



Stockpile Area



Sediment Forebay

Note: Evidence of sediment leaching. Shovel and sweep up the contaminated material in the sediment forebay and dispose of properly.

Jarrettsville Highway Maintenance Facility

1348 Cooptown Road
Forest Hill, MD 21050

Inspection Date: May 30, 2025



Discharge Pipe from Lower Inlet



Outflow Protection Channel Leading to Stormwater Management Pond



Stormwater Management Pond



Vegetative Swale and Outflow Protection Channel – North of Stormwater Management Pond

Jarrettsville Highway Maintenance Facility

1348 Cooptown Road
Forest Hill, MD 21050

Inspection Date: May 30, 2025



Stormwater Management Pond Riser



Outfall 001



Stormwater Inlet near Salt Dome

Sediment removed from inlet and plunge pool. Confirmed on site visit on July 16, 2025.

UNITED STATES ENVIRONMENTAL PROTECTION AGENCY
WASHINGTON, DC20460

Annual Reporting Form

A. GENERAL INFORMATION

1. Facility Name:	Whiteford Highway Maintenance Facility		
Facility Physical Address:	1405 Pylesville Road Whiteford, MD 21160		
2. NPDES Permit Tracking No.:	MDR001847		
3. Lead Inspectors Name:	Richard Wise	Title:	Watershed Restoration Specialist III
Additional Inspectors Name(s):	David Wong		
4. Contact Person:	Chris Sexton	Title:	Supervisor
Phone:	(410) 638-3606 x7491	E-mail:	cdsexton@harfordcountymd.gov
5. Inspection Date:	6/6/2025		

B. GENERAL INSPECTION FINDINGS

1. As part of this comprehensive site inspection, did you inspect all potential pollutant sources, including areas where industrial activity may be exposed to stormwater?

✓ YES NO

If NO, describe why not:

NOTE: *Complete Section C of this form for each industrial activity area inspected and included in your SWPPP or as newly identified in B.2 or B.3 below where pollutants may be exposed to stormwater.*

2. Did this inspection identify any stormwater or non-stormwater outfalls not previously identified in your SWPPP?

YES ✓ NO

If YES, for each location, describe the sources of those stormwater and non-stormwater discharges and any associated control measures in place:

3. Did this inspection identify any stormwater or non-stormwater discharges not previously identified in your SWPPP?

YES ✓ NO

If YES, for each location, describe the sources of those stormwater and non-stormwater discharges and any associated control measures in place:

4. Did you review stormwater monitoring data as part of this inspection to identify potential pollutant hot spots?

✓ YES NO NA, no monitoring performed

The quarterly visual monitoring reports and quarterly site facility inspection reports for the past four quarters were reviewed. No pollutant hot spots were identified or reported.

5. Describe any evidence of pollutants entering the drainage system or discharging to surface waters, and the condition of and around outfalls, including flow dissipation measures to prevent scouring.

The inspection was conducted during dry weather, six days after the most recent rain event. The sampling location and drainage channel were in good shape. There was no evidence of pollutants entering the drainage system or discharging to surface waters.

6. Have you taken or do you plan to take any corrective actions, as specified in Part 3 of the permit, since your last annual report submission (or since you received authorization to discharge under this permit if this is your first annual report), including any corrective actions identified as a result of this annual comprehensive site inspection?

If YES, how many conditions requiring review for correction action as specified in Parts 3.1 and 3.2 were addressed by these corrective actions?

3 conditions require corrective actions.

NOTE: *Complete the attached Corrective Action Form (Section D) for each condition identified, including any conditions identified as a result of this comprehensive stormwater inspection.*

C. INDUSTRIAL ACTIVITY AREA SPECIFIC FINDINGS

Complete one block for each industrial activity area where pollutants may be exposed to stormwater. Copy this page for additional industrial activity areas.

In reviewing each area, you should consider:

- Industrial materials, residue, or trash that may have or could come into contact with stormwater;
- Leaks or spills from industrial equipment, drums, tanks, and other containers;
- Offsite tracking of industrial or waste materials from areas of no exposure to exposed areas; and
- Tracking or blowing of raw, final, or waste materials from areas of no exposure to exposed areas.

INDUSTRIAL ACTIVITY AREA **1**:

1. Brief Description**:**

Stockpile Areas

2. Are any control measures in need of maintenance or repair?	YES	✓ NO
3. Have any control measures failed and require replacement?	YES	✓ NO
4. Are any additional/revised control measures necessary in this area?	YES	✓ NO

If YES to any of these three questions, provide a description of the problem: (Any necessary corrective actions should be described on the attached Corrective Action Form)

No issues observed in the stockpile areas. The areas were free of sheens and showed no evidence of any leaks or spills.

INDUSTRIAL ACTIVITY AREA **2**:

1. Brief Description**:**

Salt Dome

2. Are any control measures in need of maintenance or repair?	YES	✓ NO
3. Have any control measures failed and require replacement?	YES	✓ NO
4. Are any additional/revised control measures necessary in this area?	YES	✓ NO

If YES to any of these three questions, provide a description of the problem: (Any necessary corrective actions should be described on the attached Corrective Action Form)

No issues observed at the salt dome. The area was free of sheens and showed no evidence of any leaks or spills.

INDUSTRIAL ACTIVITY AREA **3**:

1. Brief Description**:**

Salt Brine Tank

2. Are any control measures in need of maintenance or repair?	YES	✓ NO
3. Have any control measures failed and require replacement?	YES	✓ NO
4. Are any additional/revised control measures necessary in this area?	YES	✓ NO

If YES to any of these three questions, provide a description of the problem: (Any necessary corrective actions should be described on the attached Corrective Action Form)

No issues observed at the salt brine tank. The area was free of sheens and showed no evidence of any leaks or spills.

INDUSTRIAL ACTIVITY AREA 4:

1. Brief Description**:**

Vehicle Parking Areas

2. Are any control measures in need of maintenance or repair?	YES	✓ NO
3. Have any control measures failed and require replacement?	YES	✓ NO
4. Are any additional/revised control measures necessary in this area?	YES	✓ NO

If YES to any of these three questions, provide a description of the problem: (Any necessary corrective actions should be described on the attached Corrective Action Form)

No issues observed in vehicle parking areas. The areas were free of sheens and showed no evidence of any leaks or spills.

INDUSTRIAL ACTIVITY AREA 5:

1. Brief Description:

Fueling Area

2. Are any control measures in need of maintenance or repair?	YES	✓ NO
3. Have any control measures failed and require replacement?	YES	✓ NO
4. Are any additional/revised control measures necessary in this area?	YES	✓ NO

If YES to any of these three questions, provide a description of the problem: (Any necessary corrective actions should be described on the attached Corrective Action Form)

No issues observed at the fueling area. The area was free of sheens and showed no evidence of any leaks or spills.

INDUSTRIAL ACTIVITY AREA 6:

1. Brief Description:

Generator

2. Are any control measures in need of maintenance or repair?	YES	✓ NO
3. Have any control measures failed and require replacement?	YES	✓ NO
4. Are any additional/revised control measures necessary in this area?	YES	✓ NO

If YES to any of these three questions, provide a description of the problem: (Any necessary corrective actions should be described on the attached Corrective Action Form)

No issues observed at the generator. The area was free of sheens and showed no evidence of any leaks or spills.

INDUSTRIAL ACTIVITY AREA 7:

1. Brief Description:

Covered Storage

2. Are any control measures in need of maintenance or repair?	YES	✓ NO
3. Have any control measures failed and require replacement?	YES	✓ NO
4. Are any additional/revised control measures necessary in this area?	✓ YES	NO

If YES to any of these three questions, provide a description of the problem: (Any necessary corrective actions should be described on the attached Corrective Action Form)

Accumulation of sediment and evidence of washing observed outside of the covered storage area.

INDUSTRIAL ACTIVITY AREA 8:

1. Brief Description:

Administrative Offices

2. Are any control measures in need of maintenance or repair?	YES	✓ NO
3. Have any control measures failed and require replacement?	YES	✓ NO
4. Are any additional/revised control measures necessary in this area?	YES	✓ NO

If YES to any of these three questions, provide a description of the problem: (Any necessary corrective actions should be described on the attached Corrective Action Form)

No issues observed in the administrative office area. The area was free of sheens and showed no evidence of any leaks or spills.

INDUSTRIAL ACTIVITY AREA 9:
5. Brief Description**:**

Maintenance Garage

6. Are any control measures in need of maintenance or repair?	YES	✓ NO
7. Have any control measures failed and require replacement?	YES	✓ NO
8. Are any additional/revised control measures necessary in this area?	✓ YES	NO

If YES to any of these three questions, provide a description of the problem: (Any necessary corrective actions should be described on the attached Corrective Action Form)

Scrap metal pile should be covered or placed in a covered container until it is removed.

INDUSTRIAL ACTIVITY AREA 10:
5. Brief Description**:**

Washbay

6. Are any control measures in need of maintenance or repair?	YES	✓ NO
7. Have any control measures failed and require replacement?	YES	✓ NO
8. Are any additional/revised control measures necessary in this area?	YES	✓ NO

If YES to any of these three questions, provide a description of the problem: (Any necessary corrective actions should be described on the attached Corrective Action Form)

No issues observed at the wash bay. The area was free of sheens and showed no evidence of any leaks or spills.

INDUSTRIAL ACTIVITY AREA 11:
5. Brief Description**:**

Dumpsters

6. Are any control measures in need of maintenance or repair?	YES	✓ NO
7. Have any control measures failed and require replacement?	YES	✓ NO
8. Are any additional/revised control measures necessary in this area?	✓ YES	NO

If YES to any of these three questions, provide a description of the problem: (Any necessary corrective actions should be described on the attached Corrective Action Form)

Pail of 50:1 3-cycle fuel mix located next to orange connex trailer north of the dumpster area.

INDUSTRIAL ACTIVITY AREA 12:
5. Brief Description**:**

Used Oil & Antifreeze Collection Area

6. Are any control measures in need of maintenance or repair?	YES	✓ NO
7. Have any control measures failed and require replacement?	YES	✓ NO
8. Are any additional/revised control measures necessary in this area?	YES	✓ NO

If YES to any of these three questions, provide a description of the problem: (Any necessary corrective actions should be described on the attached Corrective Action Form)

No issues observed at the used oil and antifreeze collection area. The area was free of sheens and showed no evidence of any leaks or spills.

D. CORRECTIVE ACTIONS

Complete this page for each specific condition requiring a corrective action or a review determining that no corrective action is needed. Copy this page for additional corrective actions or reviews.

Include both corrective actions that have been initiated or completed since the last annual report, and future corrective actions needed to address problems identified in this comprehensive stormwater inspection. Include an update on any outstanding corrective actions that had not been completed at the time of your previous annual report.

1. Corrective Action **1 of 3** for this reporting period.

2. Is this corrective action:
   - An update on a corrective action from a previous annual report; or
   - ✓ A new corrective action?

3. Identify the condition(s) triggering the need for this review:
   - Unauthorized release or discharge
   - Numeric effluent limitation exceedance
   - Control measures inadequate to meet applicable water quality standards
   - Control measures inadequate to meet non-numeric effluent limitations
   - ✓ Control measures not properly operated or maintained
   - Change in facility operations necessitated change in control measures
   - Average benchmark value exceedance
   - Other (describe): _____

4. Briefly describe the nature of the problem identified:

   Pile of scrap metal located on northwest side of maintenance garage next to the wash bay.

5. Date problem identified: **06/06/2025**

6. How problem was identified:
   - ✓ Comprehensive site inspection
   - Quarterly visual assessment
   - Routine facility inspection
   - Benchmark monitoring
   - Notification by EPA or State or local authorities
   - Other (describe): _____

7. Description of corrective action(s) taken or to be taken to eliminate or further investigate the problem (e.g. describe modifications or repairs to control measures, analyses to be conducted, etc.) or if no modifications are needed, basis for that determination:

   The scrap metal should be covered, removed and placed under cover or placed in an appropriate container prior to its disposal to prevent stormwater contamination and potentials metals discharge into surface waters during precipitation events.

8. Did/will this corrective action require modification of your SWPPP? YES ✓ NO

9. Date corrective action initiated: **06/06/2025**

10. Date corrective action completed:

    Or expected to be completed: **08/29/2025**

11. If corrective action not yet completed, provide the status of corrective action at the time of the comprehensive site inspection and describe any remaining steps (including timeframes associated with each step) necessary to complete corrective action:

    The issue was observed during the comprehensive annual site inspection on 06/06/2025.
    Corrective action recommended to Supervisor on 06/06/2025.

D. CORRECTIVE ACTIONS

Complete this page for each specific condition requiring a corrective action or a review determining that no corrective action is needed. Copy this page for additional corrective actions or reviews.

Include both corrective actions that have been initiated or completed since the last annual report, and future corrective actions needed to address problems identified in this comprehensive stormwater inspection. Include an update on any outstanding corrective actions that had not been completed at the time of your previous annual report.

1. Corrective Action **2 of 3** for this reporting period.

2. Is this corrective action:
   - An update on a corrective action from a previous annual report; or
   - ✓ A new corrective action?

3. Identify the condition(s) triggering the need for this review:
   - Unauthorized release or discharge
   - Numeric effluent limitation exceedance
   - Control measures inadequate to meet applicable water quality standards
   - Control measures inadequate to meet non-numeric effluent limitations
   - ✓ Control measures not properly operated or maintained
   - Change in facility operations necessitated change in control measures
   - Average benchmark value exceedance
   - Other (describe): _____

4. Briefly describe the nature of the problem identified:

   A pail of 50:1 3-cycle fuel mix was located next to the orange connex trailer located north of the dumpster area.

5. Date problem identified: **06/06/2025**

6. How problem was identified:
   - ✓ Comprehensive site inspection
   - Quarterly visual assessment
   - Routine facility inspection
   - Benchmark monitoring
   - Notification by EPA or State or local authorities
   - Other (describe): _____

7. Description of corrective action(s) taken or to be taken to eliminate or further investigate the problem (e.g. describe modifications or repairs to control measures, analyses to be conducted, etc.) or if no modifications are needed, basis for that determination:

   Place pail of 50:1 3-cycle fuel mix under cover to prevent stormwater contamination.

8. Did/will this corrective action require modification of your SWPPP? YES ✓ NO

9. Date corrective action initiated: **06/06/2025**

10. Date corrective action completed: **06/06/2025**

    Or expected to be completed: **08/29/2025**

11. If corrective action not yet completed, provide the status of corrective action at the time of the comprehensive site inspection and describe any remaining steps (including timeframes associated with each step) necessary to complete corrective action:

    The issue was observed during the comprehensive annual site inspection on 06/06/2025.
    Corrective action recommended to Supervisor on 06/06/2025.
    Corrective action was completed on 06/06/2025. Pail of fuel mix moved from area.

D. CORRECTIVE ACTIONS

Complete this page for each specific condition requiring a corrective action or a review determining that no corrective action is needed. Copy this page for additional corrective actions or reviews.

Include both corrective actions that have been initiated or completed since the last annual report, and future corrective actions needed to address problems identified in this comprehensive stormwater inspection. Include an update on any outstanding corrective actions that had not been completed at the time of your previous annual report.

1. Corrective Action **3 of 3** for this reporting period.

2. Is this corrective action:
   - An update on a corrective action from a previous annual report; or
   - ✓ A new corrective action?

3. Identify the condition(s) triggering the need for this review:
   - Unauthorized release or discharge
   - Numeric effluent limitation exceedance
   - Control measures inadequate to meet applicable water quality standards
   - Control measures inadequate to meet non-numeric effluent limitations
   - ✓ Control measures not properly operated or maintained
   - Change in facility operations necessitated change in control measures
   - Average benchmark value exceedance
   - Other (describe): _____

4. Briefly describe the nature of the problem identified:

   Sediment and gravel accumulated on the southeast side of the covered storage building. Evidence of vehicle/equipment washing.

5. Date problem identified: **06/06/2025**

6. How problem was identified:
   - ✓ Comprehensive site inspection
   - Quarterly visual assessment
   - Routine facility inspection
   - Benchmark monitoring
   - Notification by EPA or State or local authorities
   - Other (describe): _____

7. Description of corrective action(s) taken or to be taken to eliminate or further investigate the problem (e.g. describe modifications or repairs to control measures, analyses to be conducted, etc.) or if no modifications are needed, basis for that determination:

   Shovel or sweep up the accumulated sediment and gravel.

8. Did/will this corrective action require modification of your SWPPP? YES ✓ NO

9. Date corrective action initiated: **06/06/2025**

10. Date corrective action completed: **06/06/2025**

    Or expected to be completed: **08/29/2025**

11. If corrective action not yet completed, provide the status of corrective action at the time of the comprehensive site inspection and describe any remaining steps (including timeframes associated with each step) necessary to complete corrective action:

    The issue was observed during the comprehensive annual site inspection on 06/06/2025.
    Corrective action recommended to Supervisor on 06/06/2025.
    Corrective action was completed on 06/06/2025. Sediment and gravel pile has been removed.

E. ANNUAL REPORT CERTIFICATION

1. Compliance Certification

Do you certify that your annual inspection has met the requirements of Part 4.2 of the permit, and that, based upon the results of this inspection, to the best of your knowledge, you are in compliance with the permit? ✓ YES NO

If NO, summarize why you are not in compliance with the permit:

2. Annual Report Certification

I certify under penalty of law that this document and all attachments were prepared under my direction or supervision in accordance with a system designed to assure that qualified personnel properly gathered and evaluated the information submitted. Based on my inquiry of the person or persons who manage the system, or those persons directly responsible for gathering the information, the information submitted is, to the best of my knowledge and belief, true, accurate, and complete. I am aware that there are significant penalties for submitting false information, including the possibility of fine and imprisonment for knowing violations.

Authorized Representative
Printed Name: Richard Wise Title: Watershed Restoration Specialist III

Signature: Richard Wise Date Signed: 06/06/2025

Whiteford Highway Maintenance Facility

1405 Pylesville Road
Whiteford, MD 21160

Inspection Date: June 6, 2025



Southeast Side of Administrative Offices and Maintenance Garage



Southeast Side of Maintenance Garage



Southeast Side of Wash Bay



Snowplows (East of Wash Bay)

Whiteford Highway Maintenance Facility

1405 Pylesville Road
Whiteford, MD 21160

Inspection Date: June 6, 2025



Snowplows (Southwest of Dumpster Area)



Vehicle Parking (North-Northeast of Wash Bay)



Dumpster Area



Container of 50:1 3-cycle fuel mix located next to orange connex trailer north of the dumpster area

Note: The container of fuel mix should be placed under cover to prevent any stormwater contamination.

Whiteford Highway Maintenance Facility

1405 Pylesville Road
Whiteford, MD 21160

Inspection Date: June 6, 2025



Snowplows Located East of the Covered Storage Building



Snowplows Located East of the Covered Storage Building



Accumulation of Gravel and Sediment and Evidence of Vehicle/Equipment Washing on Southeast Side of Covered Storage Building

Note: The gravel and sediment should be shoveled up or swept away and disposed of properly.



Covered Storage Building

Whiteford Highway Maintenance Facility

1405 Pylesville Road
Whiteford, MD 21160

Inspection Date: June 6, 2025



Covered Storage Building



Vehicle & Equipment Parking (Northeast of Washbay)



Vehicle & Equipment Parking (Northeast of Washbay)



Vehicle & Equipment Parking (Northeast of Washbay)

Whiteford Highway Maintenance Facility

1405 Pylesville Road
Whiteford, MD 21160

Inspection Date: June 6, 2025



Vehicle & Equipment Parking (Northeast of Washbay)



Scrap Metal Pile on Northwest Side of Maintenance Garage

Note: Scrap metal pile should be covered, moved to a covered area or placed in an appropriate container until it can be disposed.



Generator



Fueling Area

Whiteford Highway Maintenance Facility

1405 Pylesville Road
Whiteford, MD 21160

Inspection Date: June 6, 2025



Sampling Location and Drainage Conveyance Channel



Sampling Point 001



Drainage Conveyance Channel



Salt Brine Tank

Whiteford Highway Maintenance Facility

1405 Pylesville Road
Whiteford, MD 21160

Inspection Date: June 6, 2025



South Stockpile



Wood Spoils (South Stockpile Area)



Snowplows (South Stockpile Area)



South Stockpile

Whiteford Highway Maintenance Facility

1405 Pylesville Road
Whiteford, MD 21160

Inspection Date: June 6, 2025



South Stockpile



South Stockpile



South Stockpile



Vegetated Buffer

Whiteford Highway Maintenance Facility

1405 Pylesville Road
Whiteford, MD 21160

Inspection Date: June 6, 2025



Vegetated Buffer



Straw Bale at Curb Cut to Vegetated Buffer



Used Antifreeze Collection Spill Collection Pallet



Used Oil Collection Spill Collection Pallet

Whiteford Highway Maintenance Facility

1405 Pylesville Road
Whiteford, MD 21160

Inspection Date: June 6, 2025



Used Oil Collection Tank



Used Antifreeze Collection Tank



Used Oil Filter Collection Cans



Salt Dome

Whiteford Highway Maintenance Facility

1405 Pylesville Road
Whiteford, MD 21160

Inspection Date: June 6, 2025



North Stockpile



North Stockpile



North Stockpile



North Stockpile

Whiteford Highway Maintenance Facility

1405 Pylesville Road
Whiteford, MD 21160

Inspection Date: June 6, 2025



North Stockpile



North Stockpile



Cistern



Cistern

Whiteford Highway Maintenance Facility

1405 Pylesville Road
Whiteford, MD 21160

Inspection Date: June 6, 2025



Corrective Action: Sediment and Gravel Pile Before Removal



Corrective Action Completed on 06/06/2025 – Sediment and Gravel Pile Has Been Removed



Corrective Action Completed on 06/06/2025 – Pail of Fuel Mix Has Been Removed from Area next to Orange Connex Trailer

Appendix D4

Harford County, MD Department of Public Works
Watershed Protection and Restoration

Good Housekeeping Plans (July 1, 2024 - June 30, 2025)

Robert Cassilly
County Executive

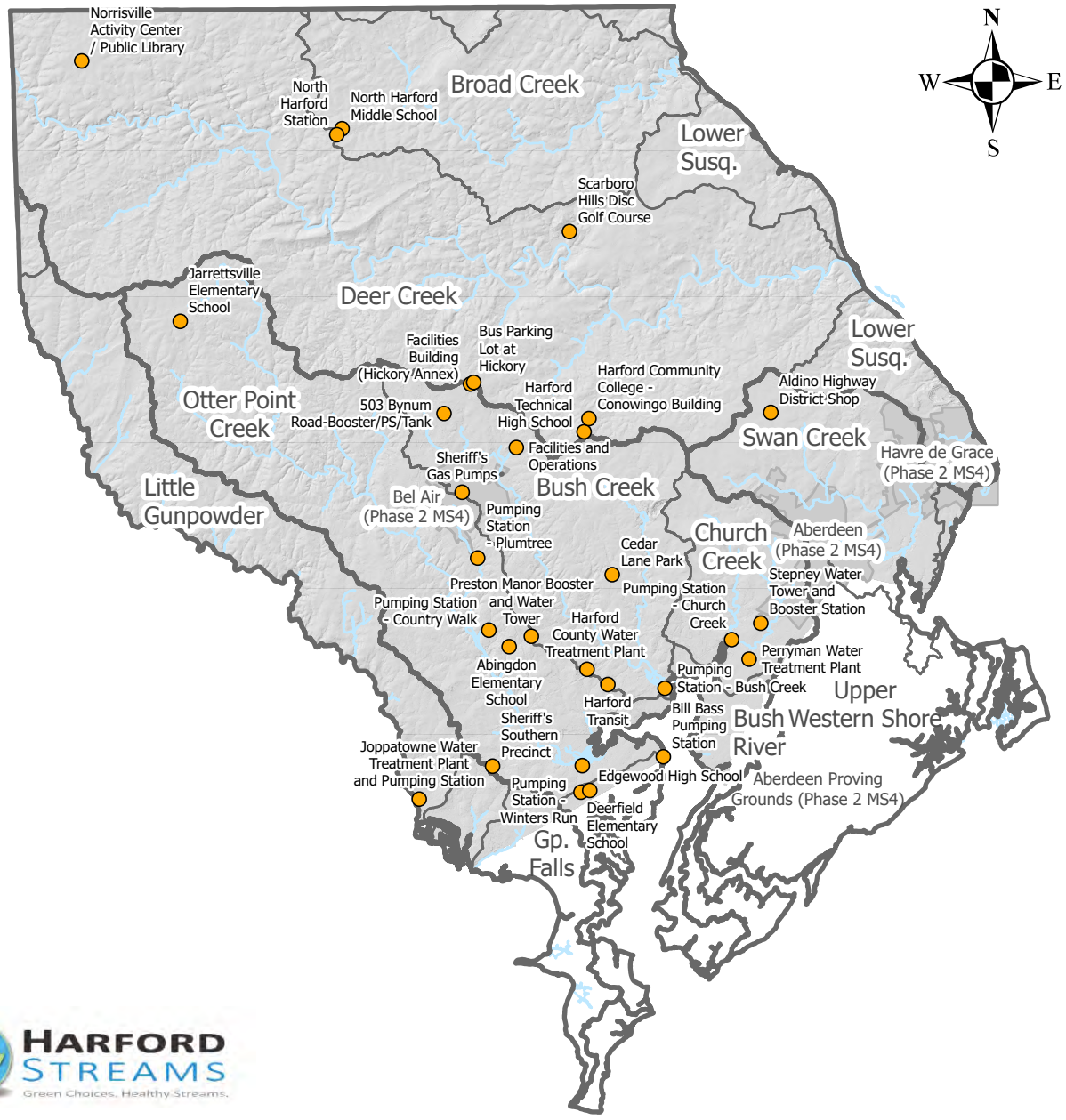

HARFORD STREAMS
Green Choices. Healthy Streams.

Harford Streams is a program developed and administered through Harford County Department of Public Works

0 1 2 4 6 8 Miles

NPDES Phase 1 MS4 Permit 22-DP-3310

Printed 12/2025

www.HarfordCountyMD.gov
HarfordStreams@HarfordCountyMD.gov
www.Facebook.com/HarfordStreams
(410) 638 - 3217

2025 List of County Owned Properties- Updated 04/04/2025

TaxID	Owner	Facility Name	Address	City	Zip Code	Facility Type	Is a GHP required for this facility:	Environmental Justice Score:	Facility in 100-yr Floodplain:
01-012053	HARFORD COUNTY MARYLAND	Riverside Building Complex - Public Library	1221 Brass Mill Road	Belcamp	21017	Office Building	No	0.63	No
01-013912	HARFORD COUNTY	Bynum Run Flood Plain	505 Cedar Lane	Bel Air	21014	Open Space	No	0.46	Yes
01-015060	BOARD OF EDUCATION	Magnolia Elementary School	901 Trimble Road	Joppa	21085	School	No	0.5	No
01-015060	BOARD OF EDUCATION	Magnolia Middle School	299 Fort Hoyle Road	Joppa	21085	School	No	0.5	No
01-015095	BOARD OF EDUCATION OF	Wm S. James Elementary School - Wm S. James Elementar	1 Laurentum Parkway	Abingdon	21009	School	No	0.14	No
01-015109	BOARD OF EDUCATION OF	Harford Glen Environmental Center	600 West Wheel Road	Bel Air	21015	Education Center	No	0.16	No
01-015117	BOARD OF EDUCATION OF	Edgewood Elementary School	2100 Cedar Drive	Edgewood	21040	School	No	0.71	No
01-015133	BOARD OF EDUCATION OF	Deerfield Elementary School	2307 Willoughby Beach Road	Edgewood	21040	School	Yes	0.59	No
01-015133	BOARD OF EDUCATION OF	Edgewood High School	2415 Willoughby Beach Road	Edgewood	21040	School	Yes	0.59	No
01-015133	BOARD OF EDUCATION OF	Edgewood Middle School	2311 Willoughby Beach Road	Edgewood	21040	School	No	0.59	No
01-015141	BOARD OF EDUCATION OF	Old Post Road Elementary School	2706 Philadelphia Road	Abingdon	21009	School	No	0.69	No
01-015974	HARFORD COUNTY	Wheel and Old Emmorton Road	Wheel and Emmorton Road	Abingdon	21009	Open Space	No	0.09	No
01-017462	BOARD OF EDUCATION	Patterson Mill Middle High School (High School)	85 Patterson Mill Road	Bel Air	21015	School	No	0.09	No
01-017462	BOARD OF EDUCATION	Patterson Mill Middle High School (Middle School)	85 Patterson Mill Road	Bel Air	21015	School	No	0.09	No
01-024973	HARFORD COUNTY	Bynum Run Flood Plain	702 Wheel Road	Bel Air	21014	Open Space	No	0.46	Yes
01-027395	HARFORD COUNTY MARYLAND	E S Route 24	E S Route 24	Abingdon	21009	Open Space	No	0.26	No
01-028537	HARFORD COUNTY MARYLAND	4127 Philadelphia Road-Flood Plain	4127 Philadelphia Road	Bel Air	21015	Open Space	No	0.69	Yes
01-031589	HARFORD COUNTY	S S Route 40 LD edge Vilg 50/55	Route 40	Edgewood	21040	Park	No	0.65	No
01-031597	HARFORD COUNTY	Edgewood Recreation Center	1980 Brookside Drive	Edgewood	21040	Recreation / Community Center	No	0.65	No
01-031600	HARFORD COUNTY	Edgewater Village Parks	Church Site Watergate Court	Edgewood	21040	Open Space	No	0.65	No
01-031619	HARFORD COUNTY	Edgewater Village Parks	Edgewood Road	Edgewood	21040	Open Space	No	0.65	No
01-031643	HARFORD COUNTY	Flood Reserve/ Edgewater Village Pt	Edgewater Drive	Edgewood	21040	Open Space	No	0.65	No
01-031651	HARFORD COUNTY	Edgewater Village Parks	Cor Top View Drive	Edgewood	21040	Open Space	No	0.65	No
01-031678	HARFORD COUNTY	Edgewater Village Parks	Horseshoe Lane	Edgewood	21040	Open Space	No	0.65	No
01-031686	HARFORD COUNTY	Edgewater Village Parks	Horseshoe Lane	Edgewood	21040	Open Space	No	0.65	No
01-031716	HARFORD COUNTY	Edgewater Village Parks	Edgewater Drive	Edgewood	21040	Open Space	No	0.65	No
01-031724	HARFORD COUNTY	Edgewood Senior Center	1000 Gateway Road	Edgewood	21040	Recreation / Community Center	No	0.65	No
01-031805	HARFORD COUNTY	Edgewater Village Parks	2030 Watergate Court	Edgewood	21040	Open Space	No	0.65	No
01-031813	HARFORD COUNTY	Edgewater Village Parks	2028 Watergate Court	Edgewood	21040	Open Space	No	0.65	No
01-031821	HARFORD COUNTY	Edgewater Village Parks	2026 Watergate Court	Edgewood	21040	Open Space	No	0.65	No
01-031848	HARFORD COUNTY	Edgewater Village Parks	2024 Watergate Court	Edgewood	21040	Open Space	No	0.65	No
01-031856	HARFORD COUNTY	Edgewater Village Parks	2022 Watergate Court	Edgewood	21040	Open Space	No	0.65	No
01-031864	HARFORD COUNTY	Edgewater Village Parks	2020 Watergate Court	Edgewood	21040	Open Space	No	0.65	No
01-031872	HARFORD COUNTY	Gateway & Brookside Drive- Edgewater Village PT	Gateway Road	Edgewood	21040	Open Space	No	0.65	No
01-031880	HARFORD COUNTY	Gilway Court Edge Vilg S2 PT 40/94	Gilway Court	Edgewood	21040	Open Space	No	0.65	No
01-031899	HARFORD COUNTY	Drainage & Utility Easement	Drainage & Utility Easement	Edgewood	21040	Open Space	No	0.65	No
01-037315	HARFORD COUNTY	Community Action Agency	1010 Gateway Road	Edgewood	21040	Recreation / Community Center	No	0.65	No
01-042718	HARFORD COUNTY MD	Old Post Road	1561 Philadelphia Road	Edgewood	21040	Open Space	No	0.73	No
01-042726	HARFORD COUNTY	Booster Station - Magnolia	1119 S. Mountain Road	Joppa	21085	Magnolia Booster Station	No	0.73	No
01-042742	HARFORD COUNTY	Pumping Station - Bush Creek	701 Pamela Drive	Abingdon	21009	Pumping Station	Yes	0.66	No
01-042777	HARFORD COUNTY	Magnolia Water Tower	1304 Pulaski Highway	Edgewood	21040	Water Tower	No	0.73	No
01-042807	HARFORD COUNTY	Preston Manor Booster and Water Tower	2817 Preston Lane	Abingdon	21009	Water Tower	Yes	0.16	No
01-042823	HARFORD COUNTY	Bill Bass Pumping Station	2 Kennard Avenue	Edgewood	21040	Pumping Station	Yes	0.59	No
01-042831	HARFORD COUNTY COMMISSIONERS	Mountain Road Park	S S Singer Road	Joppa	21085	Park	No	0.53	No
01-042858	HARFORD COUNTY COMMISSIONERS	William Avenue	William Avenue	Joppa	21085	Open Space	No	0.73	No
01-042866	HARFORD COUNTY MARYLAND	Highway Maintenance 1st District Shop	3111 Philadelphia Road	Abingdon	21009	Maintenance Facility	No	0.69	No
01-042874	HARFORD COUNTY COMMISSIONERS	Flying Point Park	511 Kennard Avenue	Edgewood	21040	Park	No	0.59	Yes
01-042904	HARFORD COUNTY COMMISSIONERS	Alice & William Longley Park	Longley & Long Bar Roads	Abingdon	21009	Park	No	0.66	No
01-042912	HARFORD COUNTY COMMISSIONERS	Adj to PRR	Boat Landing	Edgewood	21040	Boat Ramp	No	0.59	Yes
01-042947	HARFORD COUNTY MD	Bynum Ridge Conservation Area	Broadview Plats CDE	Bel Air	21014	Open Space	No	0.15	Yes
01-042971	HARFORD COUNTY	Pumping Station - Baker Avenue	3817 W Baker Avenue	Abingdon	21009	Pumping Station	No	0.66	Yes
01-043005	HARFORD COUNTY MD	Edgewood Rec Park	1702 Trimble Road	Edgewood	21040	Park	No	0.71	No
01-043013	HARFORD COUNTY MD	Adj. to Edgewood Rec Park	Adj. to Harford Square	Edgewood	21040	Open Space	No	0.71	No
01-043021	HARFORD COUNTY MD	Mariner Point Park - Visitor Center	100 Kearney Drive	Joppa	21085	Park	No	0.43	No
01-045970	HARFORD COUNTY MARYLAND	Near Anita C. Leight Estuary Center	S S Route 40	Abingdon	21009	Open Space	No	0.66	No
01-045997	HARFORD COUNTY MARYLAND	Adj. to Anita C. Leight Estuary Center	S S Route 40	Abingdon	21009	Open Space	No	0.66	Yes
01-046004	HARFORD COUNTY MARYLAND	Otter Point Creek Boat Ramp	3023 Pulaski Highway	Abingdon	21009	Boat Ramp	No	0.66	No
01-046675	HARFORD COUNTY MARYLAND	814 Philadelphia Road	814 Philadelphia Road	Joppa	21085	Open Space	No	0.73	No
01-046705	HARFORD COUNTY MARYLAND	804 Philadelphia Road	804 Philadelphia Road	Joppa	21085	Open Space	No	0.73	No
01-048074	HARFORD COUNTY	Bynum Run Flood Plain	703 Wheel Road	Bel Air	21014	Open Space	No	0.46	Yes
01-050346	HARFORD COUNTY MARYLAND	Cedar Lane Park II	2300 Calvary Road	Bel Air	21015	Open Space	No	0.46	No
01-051822	BOARD OF EDUCATION OF	Ulty Lt & Park Rear Cypress Dr S of Bel Air	Cypress Drive	Bel Air	21015	Open Space	No	0.16	No
01-056387	HARFORD COUNTY MARYLAND	Anita C. Leight Estuary Center	618 Otter Point Road	Abingdon	21009	Park	No	0.66	No
01-056867	HARFORD COUNTY MARYLAND	4125 Philadelphia Road-Flood Plain	4125 Philadelphia Road	Bel Air	21015	Open Space	No	0.69	Yes
01-063561	HARFORD COUNTY MARYLAND	Sheriff's Southern Precinct	1301 Pulaski Highway	Joppa	21085	Sheriff's Office	Yes	0.65	No
01-065238	HARFORD COUNTY	Bynum Run Flood Plain	611 E. Wheel Road	Bel Air	21015	Open Space	No	0.15	No
01-073168	HARFORD COUNTY MARYLAND	N/S Willoughby Beach Road	N S Willoughby Beach Road	Edgewood	21040	Open Space	No	0.59	Yes
01-082922	HARFORD COUNTY MARYLAND	Winters Run Greenway	1906 Philadelphia Road	Joppa	21085	Open Space	No	0.73	Yes
01-088572	HARFORD COUNTY	Bynum Run Floor Plain	617 E. Wheel Road	Bel Air	21015	Open Space	No	0.15	Yes
01-089617	HARFORD COUNTY MARYLAND	3330 Abingdon Rd, Lot 2 46.92	3330 Abingdon Rd	Abingdon	21009	Park	No	0.15	No
01-098853	HARFORD COUNTY	Nuttel Ave	Nuttel Ave	Edgewood	21040	Park	No	0.71	No
01-100645	HARFORD COUNTY	Harford Transit	1311 Abingdon Road	Abingdon	21009	Transit Operations Center	Yes	0.69	No
01-100653	HARFORD COUNTY MARYLAND	Harford County Water Treatment Plant	3340 Abingdon Road	Abingdon	21009	Water Treatment Plant	Yes	0.15	No
01-103628	BOARD OF EDUCATION OF	Adjacent to Harford Glen	Off Royal Fern Court	Bel Air	21015	Open Space	No	0.16	No
01-111868	HARFORD COUNTY	Pumping Station - Perry Avenue	2324 Perry Avenue	Edgewood	21040	Pumping Station	No	0.59	Yes
01-111876	HARFORD COUNTY	Pumping Station - Winters Run	2601 Perry Avenue	Edgewood	21040	Pumping Station	Yes	0.59	Yes
01-111884	HARFORD COUNTY MARYLAND	Edgewood Public Library	629 Edgewood Road	Edgewood	21040	Library	No	0.59	No
01-120743	BOARD OF EDUCATION	Joppatowne High School	555 Joppa Farm Road	Joppa	21085	School	No	0.43	No
01-120751	BOARD OF EDUCATION OF	Joppatowne Elementary School	407 Trimble Road	Joppa	21085	School	No	0.43	No
01-120778	BOARD OF EDUCATION OF	Riverside Elementary School	211 Stillmeadow Drive	Joppa	21085	School	No	0.5	No
01-129597	HARFORD COUNTY COMMISSIONERS	Robert Copenhaver Park	Joppa Farm Road	Joppa	21085	Park	No	0.43	Yes
01-129600	HARFORD COUNTY COMMISSIONERS	Robert Copenhaver Park	Joppa Farm Road	Joppa	21085	Park	No	0.73	Yes
01-129619	HARFORD COUNTY COMMISSIONERS	Irwin Drive Park	Irwin Drive	Joppa	21085	Park	No	0.43	Yes
01-129635	HARFORD COUNTY COMMISSION	Chell Road Park	Tot Lot	Joppa	21085	Park	No	0.43	No
01-129643	HARFORD COUNTY COMMISSIONERS	Barksdale Park	W/S Barksdale Road	Joppa	21085	Park	No	0.43	No
01-129651	HARFORD COUNTY MD	Joppa Public Library - Joppa Public Library	655 Towne Center Drive	Joppa	21085	Library	No	0.43	No
01-135120	HARFORD COUNTY	Pumping Station	Access Road	Joppa	21085	Open Space	No	0.5	No
01-135139	HARFORD COUNTY	Pumping Station	Includes Parcel 001	Joppa	21085	Pumping Station	No	0.43	No
01-135147	HARFORD COUNTY	Water Treatment Plant	432 Gilmor Road	Joppa	21085	Open Space	No	0.43	No
01-135155	HARFORD COUNTY	Open Space Adjacent from Joppatowne Water Treatment Pl	101 Townewood Drive	Joppa	21085	Open Space	No	0.43	Yes
01-135163	HARFORD COUNTY	Pumping Station	Incl Parc 2 Joppa Farm Road	Joppa	21085	Access Road	No	0.43	Yes
01-135171	HARFORD COUNTY	Pumping Station	Incl Parc 3 Joppa Farm Road	Joppa	21085	Access Road	No	0.43	Yes
01-135198	HARFORD COUNTY	Pumping Station - Town Center Drive	Station 1	Joppa	21085	Pumping Station	No	0.43	No
01-135201	HARFORD COUNTY	Joppatowne Water Treatment Plant and Pumping Station	101 Shore Drive	Joppa	21085	Wastewater Plant (20DP0675 Per	Yes	0.43	Yes
01-135228	HARFORD COUNTY	BLK 5	BLK 5	Joppa	21085	Open Space	No	0.43	No
01-135252	HARFORD COUNTY	Haverhill Pump Station	113 Haverhill Road	Joppa	21085	Pumping Station	No	0.5	No
01-135260	HARFORD COUNTY	W S Joppa Farm Road	W S Joppa Farm Road	Joppa	21085	Open Space	No	0.5	No

01-135309	HARFORD COUNTY	Lot 0.4631 AC Water Supply Parcel 1 Joppatowne				Open Space	No	0.43	No
01-135317	HARFORD COUNTY	Lot 2.0530 AC Water Supply Parcel 2 Joppatowne				Open Space	No	0.43	No
01-135325	HARFORD COUNTY	Joppatowne Water Tower	Par G Bk 34 Par H Bk 35	Joppa	21085	Open Space	No	0.43	No
01-163450	HARFORD COUNTY MARYLAND	Pumping Station - Singer Woods	2820 A Singer Woods Drive	Abingdon	21009	Pumping Station	No	0.16	No
01-168126	HARFORD COUNTY MARYLAND	Emmorton Recreation & Tennis Center - Indoor Recreation C	2213 Old Emmorton Road	Bel Air	21015	Recreation / Community Center	No	0.09	No
01-170449	HARFORD COUNTY	399 Darby Lane	399 Darby Lane	Bel Air	21014	Open Space	No	0.16	No
01-175750	BOARD OF EDUCATION OF	WS Cypress Drive S of Bel Air	Cypress Drive	Bel Air	21015	Open Space	No	0.16	No
01-176447	HARFORD COUNTY MARYLAND	Winters Run Greenway	Off Crisfield Drive	Abingdon	21009	Open Space	No	0.18	No
01-176560	HARFORD COUNTY MARYLAND	Winters Run Greenway	Off Crisfield Drive	Abingdon	21009	Open Space	No	0.18	No
01-178350	HARFORD COUNTY	Otter Point Landing	Otter Point Road	Abingdon	21009	Boat Ramp	No	0.66	Yes
01-199110	BOARD OF EDUCATION	Harford Glen Environmental Center	Adjacent Harford Glen Park	Bel Air	21014	Open Space	No	0.16	No
01-200925	HARFORD COUNTY MARYLAND	Winters Run Greenway	Off Winters Run Road	Joppa	21085	Open Space	No	0.73	Yes
01-201123	BOARD OF EDUCATION	Abingdon Elementary School	3001 S. Tollgate Road	Abingdon	21009	School	Yes	0.26	No
01-207911	HARFORD COUNTY MD	William Paca/Old Post Road School	E S Vanbibber Road	Edgewood	21040	Open Space	No	0.69	No
01-208454	HARFORD COUNTY	Woodbridge Park	Off Clover Valley Way	Edgewood	21040	Open Space	No	0.65	No
01-208462	BOARD OF EDUCATION OF	Woodbridge Park	1219 Clover Valley Way	Edgewood	21040	Open Space	No	0.65	No
01-220136	COUNTY COMMISSIONERS OF	Pumping Station - Dembytown 2	618 Dembytown Road	Joppa	21085	Pumping Station	No	0.73	No
01-223542	HARFORD COUNTY MARYLAND	Singer and Mountain Road	Singer and Mountain Road	Joppa	21085	Open Space	No	0.53	No
01-225553	HARFORD COUNTY	Bynum Run Conservation Area	N S Hookers Mill Road	Abingdon	21009	Open Space	No	0.46	Yes
01-225561	HARFORD COUNTY	Bynum Run Conservation Area	S S Hookers Mill Road	Abingdon	21009	Open Space	No	0.46	Yes
01-226436	HARFORD COUNTY	Bynum Run Conservation Area	Rear Deer Court	Abingdon	21009	Open Space	No	0.46	Yes
01-226444	HARFORD COUNTY	W S Abingdon Road	W S Abingdon Road	Abingdon	21009	Open Space	No	0.69	No
01-226460	HARFORD COUNTY	Otter Point Water and Booster Tank	1015 Otter Point Road	Abingdon	21009	Water Tower	No	0.66	No
01-227955	COUNTY COMMISSIONERS OF	Clayton Road Conservation Area	W S Clayton Road	Joppa	21085	Open Space	No	0.53	No
01-236237	HARFORD COUNTY	Belcamp Park	1119 Belcamp Garth	Belcamp	21017	Park	No	0.42	No
01-236644	BOARD OF EDUCATION OF	Box Hill South Park	333 Windy Laurel Way	Abingdon	21009	Park	No	0.45	No
01-237764	BOARD OF PARKS & RECREATION	Harford Glen Environmental Center	N E Atkisson Road	Joppa	21085	Open Space	No	0.16	No
01-244280	HARFORD COUNTY	Glenridge Booster and Tank	531 David Drive	Bel Air	21014	Water Tower	No	0.09	No
01-247352	HARFORD COUNTY	Par 1 & 2 5.36AC Patterson Mill RD Edgewood Corp Pt 72/8	Patterson Mill Road	Bel Air	21015	Open Space	No	0.09	Yes
01-250167	HARFORD COUNTY MARYLAND	Cedar Lane Park	1100 Cedar Lane	Bel Air	21015	Park	Yes	0.46	No
01-250795	HARFORD COUNTY MARYLAND	Pumping Station - Country Walk	2310-A Arthur Woods Drive	Abingdon	21009	Pumping Station	Yes	0.16	No
01-261215	BOARD OF EDUCATION	Church Creek Elementary School	4299 Church Creek Road	Belcamp	21017	School	No	0.63	No
01-261223	HARFORD COUNTY	Adjacent to Harford Glen	Off Tollgate Parkway	Bel Air	21015	Open Space	No	0.16	No
01-261231	HARFORD COUNTY	Water Tower - Country Walk	2500 Tollgate Parkway	Bel Air	21015	Water Tower	No	0.16	No
01-261258	BOARD OF EDUCATION	Emmorton Elementary School	2502 S. Tollgate Road	Bel Air	21015	School	No	0.16	No
01-261657	HARFORD COUNTY MARYLAND	Pumping Station - Plumtree Estates	2021 Royal Fern Court	Bel Air	21015	Pumping Station	No	0.16	No
01-266322	BOARD OF EDUCATION OF	Adjacent to Harford Glen	N S Wheel Road	Bel Air	21015	Open Space	No	0.16	No
01-266837	BOARD OF EDUCATION OF	Adjacent to Harford Glen	Off Country Ridge Circle	Bel Air	21015	Open Space	No	0.16	No
01-282204	HARFORD COUNTY	Joppa Water Tank	704 Philadelphia Road	Joppa	21085	Water Tower	No	0.73	No
01-284541	HARFORD COUNTY	Winters Run Greenway	S S Singer Road	Abingdon	21009	Open Space	No	0.18	Yes
01-285165	HARFORD COUNTY	Winters Run Greenway	Off Singer Road	Abingdon	21009	Open Space	No	0.18	Yes
01-297066	HARFORD COUNTY MARYLAND	2004 Willoughby Beach Road	2004 Willoughby Beach Road	Edgewood	21040	Open Space	No	0.71	No
01-308734	HARFORD COUNTY MARYLAND	Pumping Station - Riverside S40	Bata Boulevard	Belcamp	21017	Pumping Station	No	0.66	No
01-309579	HARFORD COUNTY	Pumping Station - Washington Avenue	3685 Washington Avenue	Abingdon	21009	Pumping Station	No	0.66	No
01-309587	HARFORD COUNTY MARYLAND	Open Space 4 AC off Washington Ave Lucky Property PT 92	Washington Ave	Abingdon	21009	Open Space	No	0.66	Yes
01-320157	HARFORD COUNTY MARYLAND	1620 Mandeville Road-Gunpowder PS and Tank	1620 Mandeville Road	Joppa	21085	Pumping Station	No	0.73	Yes
01-321722	HARFORD COUNTY MARYLAND	Abingdon Public Library	2510 Tollgate Road	Abingdon	21009	Library	No	0.16	No
01-326872	HARFORD COUNTY MARYLAND	Bynum Run Conservation Area	Off Sidehill Drive	Bel Air	21015	Open Space	No	0.46	Yes
01-327372	HARFORD COUNTY MARYLAND	Winters Run Greenway	Off Philadelphia Road	Edgewood	21040	Open Space	No	0.73	Yes
01-335030	HARFORD COUNTY MARYLAND	Adj. to Anita C. Leight Estuary Center	Otter Point Road	Abingdon	21009	Open Space	No	0.66	No
01-335049	HARFORD COUNTY MARYLAND	Parcel 7.75 AC Otter Point Rd S E of Abingdon	Otter Point Road	Abingdon	21009	Open Space	No	0.66	No
01-337785	HARFORD COUNTY MARYLAND	Hollywood Park	Off Holly Oak Circle	Aberdeen	21001	Park	No	0.49	Yes
01-356127	HARFORD COUNTY MARYLAND	Pumping Station - Cokesbury	3319 A Shrewsbury Road	Abingdon	21009	Pumping Station	No	0.69	No
01-357336	HARFORD COUNTY MARYLAND	Off Philadelphia Road	Off Philadelphia Road	Abingdon	21009	Open Space	No	0.69	No
01-365630	HARFORD COUNTY MARYLAND	2000 Willoughby Beach Road-Edgewood Commons	2000 Willoughby Beach Road	Edgewood	21040	Open Space	No	0.71	No
01-365649	HARFORD COUNTY MARYLAND	Washington Court	Washington Court	Edgewood	21040	Open Space	No	0.71	No
01-378082	HARFORD COUNTY MARYLAND	S S Tollgate Road	S S Tollgate Road	Abingdon	21009	Open Space	No	0.18	Yes
01-386743	HARFORD COUNTY MARYLAND	Pumping Station - Old Trails	178 Trails Way	Joppa	21085	Pumping Station	No	0.5	No
01-386972	HARFORD COUNTY MARYLAND	Open Space 1.51 AC off Lucky Ave Lucky Property PT 92/87	Lucky Ave	Abingdon	21009	Open Space	No	0.66	No
01-387863	COUNTY COMMISSIONERS OF	Parcel 0.81 AC Philadelphia Rd Bush	Philadelphia Rd	Abingdon	21009	Open Space	No	0.69	Yes
01-388037	HARFORD COUNTY MARYLAND	32.82 Acres E S Route 24 S of Norris Corner	Route 24	Abingdon	21001	Open Space	No	0.18	Yes
01-388169	HARFORD COUNTY MARYLAND	Lot 0.057 AC Riviera Dr Pumping Station #5	Riviera Drive	Joppa	21085	Pumping Station	No	0.43	No
01-393170	HARFORD COUNTY MARYLAND	8.37 Acres Arundel Rd W of Abingdon	Arundel Rd	Abingdon	21009	Open Space	No	0.18	Yes
01-393367	HARFORD COUNTY MARYLAND	James Run Pumping Station	4127 Philadelphia Road	Abingdon	21009	Pumping Station	No	0.69	No
01-395157	BOARD OF EDUCATION OF	Par C 1.59 AC N Cedar Dr BOE PT 135/84	N Cedar Dr	Edgewood	21040	Open Space	No	0.71	No
01-397419	HARFORD COUNTY MARYLAND	Tollgate Road @ Wheel Road	Tollgate Road @ Wheel Road	Bel Air	21014	Open Space	No	0.16	No
01-397456	HARFORD COUNTY MARYLAND	Open Space Off Dembytowne Rd Fosters Run P/O 132/19	Dembytown Road	Joppa	21085	Open Space	No	0.73	No
01-398725	HARFORD COUNTY MARYLAND	5 Wheel Road	5 Wheel Road	Bel Air	21014	Park	No	0.16	No
02-005174	BOARD OF EDUCATION	SE S Mount Royal Avenue	SE S. Mount Royal Avenue	Aberdeen	21001	Open Space	No	0.75	No
02-005182	BOARD OF EDUCATION OF	Aberdeen High School	251 Paradise Road	Aberdeen	21001	School	No	0.75	No
02-005182	BOARD OF EDUCATION OF	Bakerfield Elementary School	36 Baker Street	Aberdeen	21001	School	No	0.75	Yes
02-005182	BOARD OF EDUCATION OF	Swan Creek School @ CEO (Center for Educational Opportu	253 Paradise Road	Aberdeen	21001	School	No	0.75	No
02-005190	BOARD OF EDUCATION	Geoge D. Lisby Elementary School	810 Edmund Street	Aberdeen	21001	School	No	0.76	No
02-005204	BOARD OF EDUCATION OF	Aberdeen Middle School	111 Mount Royal Avenue	Aberdeen	21001	School	No	0.75	No
02-005212	BOARD OF EDUCATION OF	Hall's Cross Roads Elementary School	203 E. Bel Air Avenue	Aberdeen	21001	School	No	0.81	No
02-017016	HARFORD COUNTY	SS Rt. 7 and NS PenN/A RR	SS Rt. 7 and NS PenN/A RR	Aberdeen	21001	Open Space	No	0.82	No
02-017024	HARFORD COUNTY MD	Aberdeen Public Library	21 Franklin Street	Aberdeen	21001	Library	No	0.81	Yes
02-050196	HARFORD COUNTY	Pumping Station - Forest Greens	Perryman Road	Aberdeen	21001	Pumping Station	No	0.82	Yes
02-050404	HARFORD COUNTY MARYLAND	1204 Perryman Road	1204 Perryman Road	Aberdeen	21001	Open Space	No	0.82	No
02-050528	HARFORD COUNTY MARYLAND	N S Earlton Road	N S Earlton Road	Havre de Gra	21078	Open Space	No	0.67	No
02-050544	HARFORD COUNTY MARYLAND	W S Earlton Road	W S Earlton Road	Havre de Gra	21078	Open Space	No	0.67	No
02-050560	HARFORD COUNTY MARYLAND	N S Earlton Road	N S Earlton Road	Havre de Gra	21078	Open Space	No	0.67	No
02-050579	HARFORD COUNTY MARYLAND	N S Earlton Road	N S Earlton Road	Havre de Gra	21078	Open Space	No	0.67	No
02-050587	HARFORD COUNTY MARYLAND	N S Earlton Road	N S Earlton Road	Havre de Gra	21078	Open Space	No	0.67	No
02-053713	HARFORD COUNTY	Alfred B. Hilton Park	N E S Gravel Hill Road	Havre de Gra	21078	Park	No	0.42	No
02-053756	HARFORD COUNTY	Water Well	Corner of Perryman Road	Aberdeen	21001	Open Space	No	0.82	No
02-053764	HARFORD COUNTY	Aberdeen Water Treatment Plant	Off ROW	Aberdeen	21001	Open Space	No	0.82	No
02-053772	HARFORD COUNTY	N/W/S Perryman Road	N/W/S Perryman Road	Aberdeen	21001	Open Space	No	0.82	No
02-053780	HARFORD COUNTY	Pumping Station - Church Creek	S S Mitchell Lane	Aberdeen	21001	Open Space	No	0.82	Yes
02-053829	HARFORD COUNTY METROPOLITAN	S S Church Creek NW of Perryman	S Church Creek	Aberdeen	21001	Open Space	No	0.82	Yes
02-053837	HARFORD COUNTY	Stepney Water Tower and Booster Station	1313 S. Philadelphia Boulevard	Aberdeen	21001	Water Tower	Yes	0.82	No
02-053845	HARFORD COUNTY	Perryman Water Treatment Plant	1538 Perryman Road	Aberdeen	21001	Water Treatment Plant	Yes	0.82	No
02-053853	HARFORD COUNTY	Harford Center	4 Earlton Road	Havre De Gra	21078	Recreation / Community Center	No	0.42	No
02-053888	HARFORD COUNTY COMMISSIONERS	Chelsea Road	Chelsea Road	Aberdeen	21001	Open Space	No	0.82	Yes
02-053918	HARFORD COUNTY COMMISSIONERS	W S Cranberry Road	W S Cranberry Road	Aberdeen	21001	Open Space	No	0.82	Yes
02-053926	HARFORD COUNTY COMMISSIONER	State Road Near Perryman	State Road Near Perryman	Aberdeen	21001	Open Space	No	0.82	No
02-053942	HARFORD COUNTY COMMISSIONER	WS Bush River Rd S of Aberdeen	Bush River Road	Aberdeen	21001	Open Space	No	0.82	No
02-053950	HARFORD COUNTY HIGHWAY	Aldino Highway District Shop	3031 Hopewell Road	Aldino	21078	Maintenance Facility	Yes	0.42	No
02-053977	HARFORD COUNTY MD	Sod Run Wastewater Treatment Plant	1212 Chelsea Road	Aberdeen	21001	Wastewater Plant	No	0.82	Yes
02-055031	HARFORD COUNTY MARYLAND	Pumping Station - Church Creek	1565 Mitchell Lane	Aberdeen	21001	Pumping Station	Yes	0.82	Yes
02-059037	HARFORD COUNTY	Adj. to Hollywood Park	1508 Old Philadelphia Road	Aberdeen	21001	Open Space	No	0.82	Yes
02-066963	HARFORD COUNTY MARYLAND	2100 Perryman Road	2100 Perryman Road	Aberdeen	21001	Open Space	No	0.82	No
02-070960	HARFORD COUNTY MARYLAND	2128 Perryman Road	2128 Perryman Road	Aberdeen	21001	Open Space	No	0.82	Yes

02-073757	HARFORD COUNTY MARYLAND	539 Michaelsville Road-Perryman Wells 5,6,7,8	529 Michaelsville Road	Aberdeen	21001	Open Space	No	0.82	No
02-080834	HARFORD COUNTY	Off Perryman Road	Off Perryman Road	Aberdeen	21001	Open Space	No	0.82	No
02-081989	HARFORD COUNTY	Par A off Fords Ln Ford Estate PT 57/44	Fords Ln	Aberdeen	21001	Park	No	0.82	Yes
02-082500	HARFORD COUNTY	304 Sherrard Road--Old Landfill	304 Sherrard Road	Aberdeen	21001	Open Space	No	0.82	No
02-082845	HARFORD COUNTY	303 Sherrard Road--Old Landfill	303 Sherrard Road	Aberdeen	21001	Open Space	No	0.82	No
02-082853	HARFORD COUNTY	305 Sherrard Road--Old Landfill	305 Sherrard Road	Aberdeen	21001	Open Space	No	0.82	No
02-082861	HARFORD COUNTY	307 Sherrard Road	307 Sherrard Road	Aberdeen	21001	Open Space	No	0.82	No
02-082888	HARFORD COUNTY	309 Sherrard Road--Old Landfill	309 Sherrard Road	Aberdeen	21001	Open Space	No	0.82	No
02-082896	HARFORD COUNTY	311 Sherrard Road--Old Landfill	311 Sherrard Road	Aberdeen	21001	Open Space	No	0.82	No
02-082918	HARFORD COUNTY	313 Sherrard Road--Old Landfill	313 Sherrard Road	Aberdeen	21001	Open Space	No	0.82	No
02-082926	HARFORD COUNTY	315 Sherrard Road--Old Landfill	315 Sherrard Road	Aberdeen	21001	Open Space	No	0.82	No
02-083000	HARFORD COUNTY	Bonning Greens Road-Perryman Landfill	Bonning Greens Road	Aberdeen	21001	Open Space	No	0.82	No
02-083256	HARFORD COUNTY	Bonning Greens Road-Perryman Landfill	Bonning Greens Road	Aberdeen	21001	Open Space	No	0.82	No
02-083272	HARFORD COUNTY	Seagull Drive	Seagull Drive	Aberdeen	21001	Open Space	No	0.82	No
02-086859	HARFORD COUNTY	302 Tern Street--Old Landfill	302 Tern Road	Aberdeen	21001	Open Space	No	0.82	No
02-086867	HARFORD COUNTY	304 Tern Street--Old Landfill	304 Tern Street	Aberdeen	21001	Open Space	No	0.82	No
02-086875	HARFORD COUNTY	306 Tern Street--Old Landfill	306 Tern Street	Aberdeen	21001	Open Space	No	0.82	No
02-086883	HARFORD COUNTY	1936 Perryman Road--Old Landfill	1936 Perryman Road	Aberdeen	21001	Open Space	No	0.82	No
02-086891	HARFORD COUNTY	1934 Perryman Road--Old Landfill	1934 Perryman Road	Aberdeen	21001	Open Space	No	0.82	No
02-086905	HARFORD COUNTY	1932 Perryman Road--Old Landfill	1932 Perryman Road	Aberdeen	21001	Open Space	No	0.82	No
02-086913	HARFORD COUNTY	1930 Perryman Road --Old Landfill	1930 Perryman Road	Aberdeen	21001	Open Space	No	0.82	No
02-086921	HARFORD COUNTY	1928 Perryman Road--Old Landfill	1928 Perryman Road	Aberdeen	21001	Open Space	No	0.82	No
02-086948	HARFORD COUNTY	303 Tern Street--Old Landfill	303 Tern Street	Aberdeen	21001	Open Space	No	0.82	No
02-086956	HARFORD COUNTY	302 Sherrard Road	302 Sherrard Road	Aberdeen	21001	Open Space	No	0.82	No
02-086964	HARFORD COUNTY	305 Tern Street--Old Landfill	305 Tern Street	Aberdeen	21001	Open Space	No	0.82	No
02-086980	HARFORD COUNTY	307 Tern Street--Old Landfill	307 Tern Street	Aberdeen	21001	Open Space	No	0.82	No
02-086999	HARFORD COUNTY	306 Sherrard Road--Old Landfill	306 Sherrard Road	Aberdeen	21001	Open Space	No	0.82	No
02-087006	HARFORD COUNTY	309 Tern Street--Old Landfill	309 Tern Street	Aberdeen	21001	Open Space	No	0.82	No
02-087014	HARFORD COUNTY	308 Sherrard Road--Old Landfill	308 Sherrard Road	Aberdeen	21001	Open Space	No	0.82	No
02-087022	HARFORD COUNTY	311 Tern Street--Old Landfill	311 Tern Street	Aberdeen	21001	Open Space	No	0.82	No
02-087030	HARFORD COUNTY	310 Sherrard Road--Old Landfill	310 Sherrard Road	Aberdeen	21001	Open Space	No	0.82	No
02-087049	HARFORD COUNTY	313 Tern Street--Old Landfill	313 Tern	Aberdeen	21001	Open Space	No	0.82	No
02-087057	HARFORD COUNTY	312 Sherrard Road	312 Sherrard Road	Aberdeen	21001	Open Space	No	0.82	No
02-087065	HARFORD COUNTY	315 Tern Street--Old Landfill	315 Tern Street	Aberdeen	21001	Open Space	No	0.82	No
02-087073	HARFORD COUNTY	314 Sherrard Road--Old Landfill	314 Sherrard Road	Aberdeen	21001	Open Space	No	0.82	No
02-095483	HARFORD COUNTY MARYLAND	Pumping Station - Bush River Manor	277 Gulf Drive	Aberdeen	21001	Pumping Station	No	0.82	No
02-095629	HARFORD COUNTY	1924 Perryman Road-Old Landfill	1924 Perryman Road	Aberdeen	21001	Open Space	No	0.82	No
02-095637	HARFORD COUNTY	1926 Perryman Road--Old Landfill	1926 Perryman Road	Aberdeen	21001	Open Space	No	0.82	No
02-095726	HARFORD COUNTY MARYLAND	Perryman Park	Off Ford's Lane	Aberdeen	21001	Open Space	No	0.82	Yes
02-096463	HARFORD COUNTY	Pumping Station - Park Beach Farm	1856 Mitchell Drive	Aberdeen	21001	Pumping Station	No	0.82	No
02-097117	HARFORD COUNTY MARYLAND	Chelsea Road	Chelsea Road	Perryman	21130	Open Space	No	0.82	No
02-097125	HARFORD COUNTY MARYLAND	Perryman Road/Bypass	Perryman Road/Bypass	Perryman	21130	Open Space	No	0.82	No
02-099624	HARFORD COUNTY MARYLAND	MTA Property/ Classroom	1201 Technology Dr	Aberdeen	21001	Office Building	No	0.42	No
03-001296	HARFORD COUNTY MD	220 South Main Street	220 South Main Street	Bel Air	21014	Office Building	No	0.34	No
03-002217	BOARD OF EDUCATION OF	Homestead/Wakefield Elementary School - Homestead Build	900 South Main Street	Bel Air	21014	School	No	0.16	No
03-002225	BOARD OF EDUCATION OF	Bel Air High School	100 Heighe Street	Bel Air	21014	School	No	0.16	No
03-002233	BOARD OF EDUCATION OF	Bel Air Elementary School	30 East Lee Street	Bel Air	21014	School	No	0.24	No
03-002241	BOARD OF EDUCATION OF	Bel Air Middle School	99 Idlewild Street	Bel Air	21014	School	No	0.16	No
03-002462	HARFORD COUNTY MARYLAND	Parking Lot Main St and Route 22	Main St	Bel Air	21014	Parking Lot	No	0.34	No
03-010961	HARFORD COUNTY COMMISSIONERS	Bel Air Public Library	100 East Pennsylvania Avenue	Bel Air	21014	Library	No	0.24	No
03-010996	HARFORD COUNTY COMMISSIONERS	Old Health Department	119 Hays Street	Bel Air	21014	Parking Lot	No	0.34	No
03-011003	HARFORD COUNTY COMMISSIONERS	Sheriff's Gas Pumps	Courtland & Burns Alley	Bel Air	21014	Parking Lot	Yes	0.24	No
03-011011	HARFORD COUNTY COMMISSIONERS	Bel Air Parking Garage	26 Courtland & Hickory Avenue	Bel Air	21014	Parking Garage	No	0.24	No
03-011054	HARFORD COUNTY COMMISSIONERS	Office Building - Vacant	29 West Courtland Street	Bel Air	21014	Office Building	No	0.34	No
03-011062	HARFORD COUNTY COMMISSIONERS	Office Building	18 Office Street	Bel Air	21014	Office Building	No	0.34	No
03-011070	HARFORD COUNTY COMMISSIONERS	Circuit Courthouse	20 West Courtland Street	Bel Air	21014	Courthouse	No	0.34	No
03-011100	BOARD OF EDUCATION OF	BOE Administrative Offices	102 South Hickory Avenue	Bel Air	21014	Office Building	No	0.24	No
03-011119	HARFORD COUNTY COMMISSIONERS	Sheriff's Headquarters	45 South Main Street	Bel Air	21014	Sheriff's Office	No	0.24	No
03-011127	HARFORD COUNTY COMMISSIONERS	Bel Air Colored High School	205 Hays Street	Bel Air	21014	Office Building	No	0.34	No
03-011143	HARFORD COUNTY MD	Mary Risteau Parking Lot	2 S. Bond Street	Bel Air	21014	Parking Lot	No	0.34	No
03-011151	HARFORD COUNTY MD	Office on Aging	145 North Hickory Avenue	Bel Air	21014	Office Building	No	0.24	No
03-011178	HARFORD COUNTY MD	Mann House - Mann House	14 Williams Street	Bel Air	21014	Recreation / Community Center	No	0.34	No
03-012344	HARFORD COUNTY	212 S Bond Street	212 S Bond Street	Bel Air	21014	Office Building	No	0.34	No
03-013987	HARFORD COUNTY	Heavenly Waters Park/Maulsby Street	E of Maulsby Street	Bel Air	21014	Open Space	No	0.34	No
03-019616	HARFORD COUNTY MARYLAND	Commercial & parking lot	112 S Hickory Ave	Bel Air	21014	Commercial	No	0.24	No
03-023400	HARFORD COUNTY MARYLAND	lot 75x150 0.264 AC	143 Thomas Street	Bel Air	21014	Parking Lot	No	0.34	No
03-025004	HARFORD COUNTY MARYLAND	Parking Lot	11 W. Courtland	Bel Air	21014	Parking Lot	No	0.24	No
03-029220	BOARD OF TRUSTEES OF	Adjacent to Harford Community College	400 Thomas Run Road	Bel Air	21015	Open Space	No	0.09	No
03-031020	HARFORD COUNTY MARYLAND	Blakes Venture	Off Bynum Road	Forest Hill	21050	Open Space	No	0.15	Yes
03-031330	BOARD OF EDUCATION	Forest Hill Annex - Food Services/LPC	101 Industry Lane	Forest Hill	21050	Forest Hill Annex	No	0.12	No
03-031349	BOARD OF EDUCATION	C. Milton Wright High School	1301 North Fountain Green Road	Bel Air	21015	School	No	0.09	No
03-031357	BOARD OF EDUCATION	Facilities Building (Hickory Annex)	2209 Conowingo Road	Bel Air	21015	Maintenance Facility	Yes	0.09	No
03-031365	BOARD OF EDUCATION OF	Hickory Elementary School	2100 Conowingo Road	Bel Air	21014	School	No	0.12	No
03-031373	BOARD OF EDUCATION OF	Fallston High School	2301 Carrs Mill Road	Fallston	21047	School	No	0.12	No
03-031373	BOARD OF EDUCATION OF	Fallston Middle School	2303 Carrs Mill Road	Fallston	21047	School	No	0.12	No
03-031381	BOARD OF EDUCATION OF	Harford Academy	100 Thomas Run Road	Bel Air	21015	School	No	0.09	No
03-031381	BOARD OF EDUCATION OF	Harford Technical High School	200 Thomas Run Road	Bel Air	21015	School	Yes	0.09	No
03-031381	BOARD OF EDUCATION OF	Prospect Mill Elementary School	101 Prospect Mill Road	Bel Air	21015	School	No	0.09	No
03-031403	BOARD OF EDUCATION OF	Churchville Elementary School	2935 Level Road	Churchville	21028	School	No	0.45	No
03-031411	BOARD OF EDUCATION OF	Southampton Middle School	1200 Moores Mill Road	Bel Air	21014	School	No	0.24	No
03-031438	BOARD OF EDUCATION OF	Youth's Benefit Elementary School - Primary Building	1901 Fallston Road	Fallston	21047	School	No	0.12	No
03-031446	HARFORD COUNTY MARYLAND	Reckord Road Park	800 Mountain Road	Joppa	21085	Park	No	0.1	No
03-031454	BOARD OF EDUCATION OF	Forest Hill Elementary School	2407 Rocks Road	Forest Hill	21050	School	No	0.12	No
03-031462	BOARD OF EDUCATION OF	Hickory Annex - Public School Facilities	2209 Conowingo Road	Bel Air	21014	Maintenance Facility	No	0.09	No
03-031470	BOARD OF EDUCATION OF	Ring Factory Elementary School	1400 Emmorton Road	Bel Air	21014	School	No	0.16	No
03-032647	BOARD OF TRUSTEES OF	Adjacent to Harford Community College	300 Thomas Run Road	Bel Air	21015	Open Space	No	0.09	No
03-033767	BOARD OF TRUSTEES OF	Adjacent to Harford Community College	W S Thomas Run Road	Bel Air	21015	Open Space	No	0.09	No
03-033775	BOARD OF TRUSTEES OF	Road From Schucks Corner to Thomas Run	Schucks Road	Bel Air	21015	Unknown	No	0.09	No
03-033775	BOARD OF TRUSTEES OF	Adjacent to Harford Community College	510 Thomas Run Road	Bel Air	21015	College Academic Building	No	0.09	No
03-035557	HARFORD COUNTY MARYLAND	Facilities and Operations	611 Fountain Green Road	Bel Air	21015	Maintenance Facility	Yes	0.09	No
03-035921	BOARD OF TRUSTEES	W S Thomas Run Rd N of Fulford	Thomas Run Road	Bel Air	21015	Open Space	No	0.09	No
03-039129	HARFORD COUNTY MARYLAND	Prospect Mill Park	821 Prospect Mill Road	Bel Air	21015	Park	No	0.09	No
03-040461	HARFORD COUNTY MARYLAND	Tudor Hall	17 Tudor Lane	Bel Air	21015	Historic Site	No	0.09	No
03-040593	HARFORD COUNTY	Flood Plain North of Chestnut Hill	1225 Walters Mill Road	Forest Hill	21050	Open Space	No	0.12	Yes
03-043177	BOARD OF TRUSTEES	Harford Community College - Amoss Center	401 Thomas Run Road	Bel Air	21015	Theatre	No	0.04	
03-043177	BOARD OF TRUSTEES	Harford Community Cololege - Joppa Hall - TV Station	401 Thomas Run Road	Bel Air	21015	Televsion Studio	No	0.04	
03-043177	BOARD OF TRUSTEES	Harford Community College - Student Center	401 Thomas Run Road	Bel Air	21015	Student Center	No	0.04	
03-043177	BOARD OF TRUSTEES	Harford Community College - Observatory	401 Thomas Run Road	Bel Air	21015	Observatory	No	0.04	
03-043177	BOARD OF TRUSTEES	Harford Community College - Hays-Heighe House	401 Thomas Run Road	Bel Air	21015	Multi-Purpose Building	No	0.04	
03-043177	BOARD OF TRUSTEES	Harford Community College - Forest Hill Building	401 Thomas Run Road	Bel Air	21015	Multi-Purpose Building	No	0.04	
03-043177	BOARD OF TRUSTEES	Harford Community College - Fallston Hall	401 Thomas Run Road	Bel Air	21015	Multi-Purpose Building	No	0.04	
03-043177	BOARD OF TRUSTEES	Harford Community College - Edgewood Hall	401 Thomas Run Road	Bel Air	21015	Multi-Purpose Building	No	0.04	
03-043177	BOARD OF TRUSTEES	Harford Community College - Library	401 Thomas Run Road	Bel Air	21015	Library	No	0.04	

03-043177	BOARD OF TRUSTEES	Harford Community College - Conowingo Building	401 Thomas Run Road	Bel Air	21015	Facilities & Operations Building	Yes	0.04	No
03-043177	BOARD OF TRUSTEES	Harford Community College - Maryland Hall	401 Thomas Run Road	Bel Air	21015	College Academic Building	No	0.04	
03-043177	BOARD OF TRUSTEES	Harford Community College - Havre de Grace Hall	401 Thomas Run Road	Bel Air	21015	College Academic Building	No	0.04	
03-043177	BOARD OF TRUSTEES	Harford Community College - Bel Air Hall	401 Thomas Run Road	Bel Air	21015	College Academic Building	No	0.04	
03-043177	BOARD OF TRUSTEES	Harford Community College - Aberdeen Hall	401 Thomas Run Road	Bel Air	21015	College Academic Building	No	0.04	
03-043177	BOARD OF TRUSTEES	Harford Community College - Belcamp Building	401 Thomas Run Road	Bel Air	21015	Career Training Center	No	0.04	
03-043177	BOARD OF TRUSTEES	Harford Community College - SusquehanN/A Center	401 Thomas Run Road	Bel Air	21015	Athletics Center	No	0.04	
03-043177	BOARD OF TRUSTEES	Harford Community College - Sports Complex Building	401 Thomas Run Road	Bel Air	21015	Athletics Center	No	0.04	
03-043177	BOARD OF TRUSTEES	Harford Community College - Chesapeake Center	401 Thomas Run Road	Bel Air	21015	Administration Building	No	0.04	No
03-043185	HARFORD COMMUNITY COLLEG	Adjacent to Harford Community College	SS Medical Hall Road	Bel Air	21015	Open Space	No	0.04	No
03-043193	HARFORD COUNTY	Pumping Station - Harford Estates	711 Bernadette Drive	Forest Hill	21050	Open Space	No	0.05	No
03-043223	HARFORD COUNTY COMMISSIONERS	Churchville Recreation Complex	111 Glenville Road	Churchville	21028	Recreation / Community Center	No	0.45	No
03-043231	HARFORD COUNTY COMMISSIONERS	Liriodendron	502 West Gordon Street	Bel Air	21014	Open Space	No	0.34	No
03-043258	HARFORD COUNTY MARYLAND	EOC Building	2220 Ady Road	Forest Hill	21050	Office Building	No	0.12	No
03-043266	HARFORD COUNTY MARYLAND	Detention Center	1030 North Rock Spring Road	Bel Air	21014	Detention Center	No	0.11	Yes
03-043274	HARFORD COUNTY COMMISSIONERS	Heavenly Waters Park/Edgely Grove	N/W S Route 1	Bel Air	21014	Open Space	No	0.03	Yes
03-043282	HARFORD COUNTY MARYLAND	Equestrian Center	608 Tollgate Road	Bel Air	21014	Park	No	0.03	No
03-043363	HARFORD COUNTY MARYLAND	Fallston Recreation Complex - Maintenance Building	1809 Fallston Road	Fallston	21047	Maintenance Facility	No	0.12	No
03-043371	HARFORD COUNTY MD	Unimproved Parcel	Arden Drive	Fallston	21047	Open Space	No	0.12	No
03-043398	HARFORD COUNTY MD	Forest Hill Recreation Complex - Concession Stand	21 Rock Spring Church Road	Forest Hill	21050	Recreation / Community Center	No	0.09	No
03-043428	HARFORD COUNTY MD	Hickory II - Fleet Maintenance	1807 North Fountain Green Road	Bel Air	21015	Maintenance Facility	No	0.09	No
03-043436	HARFORD COUNTY MD	Fallston Public Library - Fallston Public Library	1461 Fallston Road	Fallston	21047	Library	No	0.12	No
03-043444	HARFORD COUNTY MD	Forest Hill Recreation Complex	W S Route 24	Forest Hill	21050	Recreation / Community Center	No	0.09	No
03-043452	HARFORD COUNTY MD	NWS Sandy Hook Rd Deer Creek Conserv Area	3030 Sandy Hook Rd	Bel Air	21014	Open Space	No	0.09	Yes
03-046109	HARFORD COUNTY MARYLAND	S S Tollgate Road	S S Tollgate Road	Bel Air	21014	Open Space	No	0.03	No
03-047636	HARFORD COUNTY MARYLAND	S S Southampton Rd E of Bel Air	Southampton Rd	Bel Air	21014	Open Space	No	0.03	Yes
03-048152	HARFORD COUNTY MARYLAND	Kelly House	500 West Gordon	Bel Air	21014	Historic Site	No	0.34	No
03-050270	HARFORD COUNTY MARYLAND	Open Space Behind Southampton	S S Moores Mill Road	Bel Air	21014	Open Space	No	0.24	No
03-051765	BOARD OF TRUSTEES	Stucco House	605 Prospect Mill Road	Bel Air	21015	Open Space	No	0.09	No
03-052354	BOARD OF EDUCATION	Adjacent to Harford Glen	1618 Somerville Road	Bel Air	21015	Open Space	No	0.16	No
03-054241	BOARD OF TRUSTEES OF	208 Thomas Run Road	208 Thomas Run Road	Bel Air	21015	Observatory	No	0.09	No
03-054748	HARFORD COMMUNITY COLLEGE	Adjacent to Harford Community College	304 Thomas Run Road	Bel Air	21015	Open Space	No	0.09	No
03-059332	HARFORD COUNTY	N S Tollgate Road	1621 S. Tollgate Road	Bel Air	21015	Open Space	No	0.16	No
03-059545	HARFORD COUNTY MARYLAND	1200 MacPhail Rd, LD Gonzalez Pt 124/89	1200 MacPhail Rd	Bel Air	21015	Open Space	No	0.04	Yes
03-062171	HARFORD COUNTY MARYLAND	Edgeley Grove Farm	864 Smith Lane	Benson	21018	Farm	No	0.12	No
03-065693	BOARD OF EDUCATION OF	119 Schucks Road	119 Schucks Road	Bel Air	21015	Open Space	No	0.45	No
03-072851	BOARD OF EDUCATION	Right of Way - Emmorton Elementary	Regent Drive	Bel Air	21014	Right of Way	No	0.16	No
03-073165	BOARD OF EDUCATION	Right of Way - Emmorton Elementary	West Riding Drive	Bel Air	21014	Right of Way	No	0.16	No
03-079023	BOARD OF EDUCATION	Bus Parking Lot at Hickory	Fountain Green Road	Bel Air	21015	Parking Lot	Yes	0.09	No
03-082806	HARFORD COUNTY	Flood Plain Property	1304 Montreal Drive	Aberdeen	21001	Open Space	No	0.45	Yes
03-102017	HARFORD COUNTY MARYLAND	Lot 51 100x200 S1 PT 6/24	1302 Montreal Drive	Aberdeen	21001	Open Space	No	0.45	Yes
03-102025	HARFORD COUNTY MARYLAND	Lot 52 100x200 W S Montreal Dr AC S1 PT 6/24	Montreal Drive	Aberdeen	21001	Open Space	No	0.45	Yes
03-106721	HARFORD COUNTY	1306 Montreal Drive	1306 Montreal Drive	Aberdeen	21001	Open Space	No	0.45	Yes
03-117405	HARFORD COUNTY MARYLAND	Tollgate Road Improvement Project	1512 S. Tollgate Road	Bel Air	21015	Open Space	No	0.16	Yes
03-121100	HARFORD COUNTY MARYLAND	Property Adjacent to Friends Park	31 E. Jarrettsville Road	Forest Hill	21050	Open Space	No	0.12	No
03-132056	HARFORD COUNTY	E S Route 1	E S Route 1	Bel Air	21014	Open Space	No	0.03	Yes
03-147436	HARFORD COUNTY	Lot 11 104/100x327 Shawnee Pt 12/6	1217 A Walters Mill Rd	Forest Hill	21050	Open Space	No	0.12	Yes
03-156605	HARFORD COUNTY MARYLAND	Pumping Station - Greenridge	813 Flintlock Drive	Bel Air	21015	Pumping Station	No	0.45	Yes
03-171337	HARFORD COUNTY MARYLAND	Lt 1 27742 SF Shawnee P 12/6	1202 Walters Mill Road	Forest Hill	21050	Boat Ramp	No	0.12	Yes
03-171418	HARFORD COUNTY	Wooded Unimproved Land	3203 Shawnee Road	Forest Hill	21050	Open Space	No	0.12	Yes
03-173593	BOARD OF EDUCATION OF HARFORD CT	Right of Way - Homestead/Wakefield Elementary	Adjacent LT - Chatham Road	Bel Air	21014	Right of Way	No	0.16	No
03-174476	HARFORD COUNTY MD	Hickory Park	2310 Ady Road	Forest Hill	21050	Park	No	0.12	No
03-175731	HARFORD COUNTY	Parking Lot Office on Aging	Wright Street	Bel Air	21014	Parking Lot	No	0.24	No
03-176231	HARFORD COUNTY	Adjacent to Wakefield Meadow	Adj To Wakefield Meadows	Bel Air	21014	Open Space	No	0.16	No
03-177939	HARFORD COUNTY MARYLAND	Schucks Road Regional Sports Complex	301 Schucks Road	Bel Air	21015	Park	No	0.45	No
03-181448	HARFORD COUNTY MARYLAND	Right of Way - Southampton Middle School	Broadway	Bel Air	21014	Right of Way	No	0.24	No
03-181685	HARFORD COUNTY MARYLAND	Right of Way - Southampton Middle School	Broadway	Bel Air	21014	Right of Way	No	0.24	No
03-188477	HARFORD COUNTY MARYLAND	Benson Field / Residential House	712 Smith Lane	Fallston	21014	Park	No	0.12	No
03-189325	HARFORD COUNTY MD	Vale Road Water Tank	501 Vale Road	Bel Air	21014	Water Tower	No	0.03	No
03-194841	HARFORD COUNTY	Boulton Street Parking Lot	Boulton Street	Bel Air	21014	Parking Lot	No	0.34	No
03-204499	HARFORD COUNTY METROPOLITAN	Adjacent to Hickory Elementary	2126 Conowingo Road	Bel Air	21014	Open Space	No	0.12	No
03-205142	HARFORD COUNTY	Pumping Station - Fairwind Farms	802 A Deep Ridge Road	Bel Air	21014	Open Space	No	0.16	No
03-207358	HARFORD COUNTY	Off E Ring Factory Road	Off E Ring Factory Road	Bel Air	21014	Open Space	No	0.02	No
03-219453	HARFORD COUNTY MARYLAND	Pumping Station - Brentwood Park	1021 Red Pump Road	Bel Air	21015	Pumping Station	No	0.03	No
03-230562	BOARD OF EDUCATION	C. Milton Wright High School	Off Route 543	Bel Air	21015	Open Space	No	0.09	No
03-230872	HARFORD COUNTY	Pumping Station - Plumtree	205 W Ring Factory Road	Bel Air	21014	Pumping Station	Yes	0.16	No
03-235009	HARFORD COUNTY	Priv RD Dixie Ln Voshelle S1 Pt 60/35	Dixie Ln	Forest Hill	21050	Private Road	No	0.12	No
03-235238	HARFORD COUNTY MD	Heavenly Waters Park/Gateway Drive	Off of Gateway	Bel Air	21014	Open Space	No	0.34	No
03-243524	HARFORD COUNTY MARYLAND	Deer Creek Conservation Area	Off Deer Creek	Street	21154	Open Space	No	0.12	Yes
03-256138	HARFORD COUNTY	Pumping Station - Woodland Hills	801 N. Tollgate Road	Bel Air	21014	Pumping Station	No	0.03	No
03-257088	HARFORD COUNTY	Lot 1 LD WM Kurtz PT 94/56	35 E. Jarrettsville Rd	Jarrettsville	21084	Park	No	0.12	No
03-266087	HARFORD COUNTY	503 Bynum Road-Booster/PS/Tank	503 Bynum Road	Bel Air	21015	Booster Station	Yes	0.12	No
03-267024	HARFORD COUNTY MARYLAND	Prospect Mill Park	807 Prospect Mill Road	Bel Air	21015	Park	No	0.09	No
03-268284	HARFORD COUNTY BOARD OF EDUCATIO	Red Pump Elementary School	600 Red Pump Road	Bel Air	21014	School	No	0.05	No
03-270394	HARFORD COUNTY	Water Tank - Fountain Green	521 S. Fountain Green Road	Bel Air	21014	Water Tower	No	0.45	No
03-282856	HARFORD COUNTY	Water Tower	Bynum & Route 1	Bel Air	21015	Water Tower	No	0.12	No
03-289664	BOARD OF EDUCATION	Forest Lakes Elementary School	100 Osborne Parkway	Forest Hill	21050	School	No	0.09	No
03-290530	HARFORD COUNTY	Unimproved Parcel	Industry Lane	Forest Hill	21050	Open Space	No	0.12	No
03-294714	HARFORD COUNTY	Forest Hill Lake Water Tower	2008 Rock Spring Road	Forest Hill	21050	Water Tower	No	0.09	No
03-301575	HARFORD COUNTY	Pumping Station - Hickory Overlook	621 A Hickory Overlook Drive	Bel Air	21014	Pumping Station	No	0.03	No
03-302393	BOARD OF EDUCATION	Fountain Green Elementary School	517 South Fountain Green Road	Bel Air	21015	School	No	0.45	No
03-302407	HARFORD COUNTY MARYLAND	Adjacent to Fountain Green Elementary	ES S. Fountain Green Road	Bel Air	21015	Open Space	No	0.45	No
03-302415	HARFORD COUNTY MARYLAND	Adjacent to Fountain Green Elementary	Ad. to Fountain Green Elementary	Bel Air	21015	Open Space	No	0.45	No
03-305929	HARFORD COUNTY	Pumping Station - Record Road	2714 Reckord Road	Fallston	21047	Pumping Station	No	0.1	Yes
03-306593	HARFORD COUNTY MD	Fleet Maintenance	1304 Enterprise Court	Bel Air	21015	Maintenance Facility	No	0.03	No
03-308456	HARFORD COUNTY MARYLAND	Adjacent to Hickory II	1851 N Fountain Green Road	Bel Air	21015	Maintenance Facility	No	0.09	No
03-308464	HARFORD COUNTY	Off Hall Street	Off Hall Street	Bel Air	21014	Open Space	No	0.34	No
03-308472	HARFORD COUNTY MD	Pumping Station - Trails of Glen Eagles	389 Loch Doon Trail	Bel Air	21014	Pumping Station	No	0.34	No
03-308480	HARFORD COUNTY	Heavenly Waters Park/Hall Street	End of Hall Street	Bel Air	21014	Open Space	No	0.34	No
03-309762	HARFORD COUNTY	Heavenly Waters Park/Bypass	E of Rt 1	Bel Air	21014	Open Space	No	0.34	No
03-316114	HARFORD COUNTY	Heavenly Waters Park/Tollgate Fields	704 Tollgate Road	Bel Air	21014	Park	No	0.03	No
03-317056	HARFORD COUNTY	N S Aldino Rd HC PT 96/53	Aldino Rd	Churchville	21028	Open Space	No	0.45	No
03-318494	HARFORD COUNTY	Pumping Station - Woodcrest	508 A Stratford Road	Fallston	21047	Pumping Station	No	0.1	No
03-320901	HARFORD COUNTY	Gymnasium S S Churchville Rd	3023 Level Road	Churchville	21028	Recreation / Community Center	No	0.45	No
03-322688	HARFORD COUNTY	Future Ma & Pa Trail	404 Mast Street	Bel Air	21014	Parking Lot	No	0.34	No
03-324893	HARFORD COUNTY MARYLAND	Blakes Venture Park	326 Bynum Run Road	Forest Hill	21050	Park	No	0.15	No
03-338398	HARFORD COUNTY MARYLAND	Ma & Pa Trail	Off Wagner Way	Forest Hill	21050	Open Space	No	0.15	No
03-338584	HARFORD COUNTY MARYLAND	Pumping Station - Parliament Ridge	499 Red Pump Road	Bel Air	21014	Open Space	No	0.05	No
03-341763	HARFORD COUNTY MARYLAND	Ma & Pa Trail	Off Mardic Drive	Forest Hill	21050	Open Space	No	0.15	No
03-341836	HARFORD COUNTY MARYLAND	Forest Hill / Hickory Activity Center	2213 Commerce Road	Forest Hill	21050	Recreation / Community Center	No	0.12	No
03-342301	HARFORD COUNTY MARYLAND	McFaul Community Center	525 West MacPhail Road	Bel Air	21014	Recreation / Community Center	No	0.16	No
03-345262	HARFORD COUNTY MARYLAND	Lyn Stacie Getz Playground	301 W. Ring Factory Road	Bel Air	21015	Playground	No	0.16	No
03-349926	HARFORD COUNTY MARYLAND	Ma & Pa Trail	Off Trudy Court	Forest Hill	21050	Open Space	No	0.15	No

03-353389	HARFORD COUNTY MARYLAND	Oak Ridge Park	N S of Moores Mill Road	Bel Air	21014	Open Space	No	0.15	No
03-353397	HARFORD COUNTY MARYLAND	Edgely Grove Farm/Parcel B	Smith Lane	Bel Air	21014	Open Space	No	0.12	No
03-354415	HARFORD COUNTY MARYLAND	Tucker Field - Announcers Stand	630 A East West Highway	Bel Air	21014	Recreation / Community Center	No	0.03	No
03-360814	BOARD OF TRUSTEES OF	302 Thomas Run Road	302 Thomas Run Road	Bel Air	21015	Annex	No	0.09	No
03-360822	BOARD OF TRUSTEES OF	298 Thomas Run Road	298 Thomas Run Road	Bel Air	21015	Open Space	No	0.09	No
03-360830	BOARD OF TRUSTEES OF	Lot 4	294 Thomas Run Road	Bel Air	21015	Open Space	No	0.09	No
03-363740	HARFORD COUNTY MARYLAND	11152 Timberlea Drive	1112 Timberlea Drive	Forest Hill	21050	Open Space	No	0.05	No
03-363759	HARFORD COUNTY MARYLAND	Saddleview Conservation Area	Off Grafton Shop Road	Forest Hill	21050	Open Space	No	0.05	Yes
03-367789	HARFORD COUNTY MARYLAND	Prospect Mill Park Connector	Off Jacobs Well Court	Bel Air	21015	Open Space	No	0.09	No
03-367924	HARFORD COUNTY MARYLAND	Heavenly Waters Park/Future ROW	Irwin's Choice	Bel Air	21014	Open Space	No	0.11	No
03-370143	HARFORD COUNTY MARYLAND	Ma/Pa Trail Irwin's Choice S3	Ma/Pa Trail	Bel Air	21014	Open Space	No	0.11	No
03-371530	HARFORD COUNTY MARYLAND	Tire Lot	121 S. Main Street	Bell Air	21014	Parking Lot	No	0.24	No
03-377059	HARFORD COUNTY MARYLAND	Pipercove Way - Right of Way	Off Pipercove Way	Bel Air	21014	Open Space	No	0.03	No
03-383059	HARFORD COUNTY MARYLAND	Op Sp Par 1 Off Tollgate Rd Tollgate Village	Tollgate Road	Bel Air	21014	Open Space	No	0.03	Yes
03-383075	HARFORD COUNTY MARYLAND	Off Tollgate Rd/ Tollagte Village 121/46		Bel Air	21014	Open Space	No	0.03	Yes
03-383083	HARFORD COUNTY MARYLAND	Pumping Station - Tollgate Village	790 Turtlecreek Court	Bel Air	21014	Pumping Station	No	0.03	No
03-387127	HARFORD COUNTY MARYLAND	Pumping Station - Vale Woods	1167 Tuscany Lane	Bel Air	21014	Pumping Station	No	0.03	No
03-388441	HARFORD COUNTY MARYLAND	Graybeal Fields	590 Red Pump Road	Bel Air	21014	Recreation / Community Center	No	0.05	No
03-389464	HARFORD COUNTY MARYLAND	Open Space .21 AC Off Moores Mill Rd 131/46	Moores Mill Road	Bel Air	21014	Open Space	No	0.11	No
03-394697	HARFORD COUNTY MARYLAND	1551 Blakes Legacy Drive	Blakes Legacy Drive	Bel Air	21014	Pumping Station	No	0.05	No
03-396994	HARFORD COUNTY MARYLAND	Pumping Station - Cedarwood	Cedarwood Dr	Bel Air	21015	Open Space	No	0.05	No
03-400216	HARFORD COUNTY MARYLAND	Pumping Station - Ring Factory	676 Iron Gate Road	Bel Air	21014	Pumping Station	No	0.16	No
04-006178	BOARD OF EDUCATION OF	Jarrettsville Elementary School	3818 Norrisville Road	Jarrettsville	21084	School	Yes	0.11	No
04-006186	BOARD OF EDUCATION OF	Jarrettsville Elementary School	3818 Norrisville Road	Jarrettsville	21084	Open Space	No	0.11	No
04-006194	BOARD OF EDUCATION OF	Norrisville Elementary School	5302 Norrisville Road	White Hall	21161	School	No	0.13	No
04-027469	HARFORD COUNTY COMMISSIONERS	Jarrettsville Highways District Shop	3804 Federal Hill Road	Jarrettsville	21084	Maintenance Facility	No	0.11	No
04-027485	HARFORD COUNTY COMMISSIONERS	Parker Conservation Area	SS Green Road	White Hall	21161	Open Space	No	0.13	Yes
04-027493	HARFORD COUNTY COMMISSIONERS	Eden Mill Park - Nature Center	1617 Eden Mill Road	Pylesville	21132	Park	No	0.13	Yes
04-027507	HARFORD COUNTY MD	Madonna Landfill	Madonna Road	White Hall	21161	Open Space	No	0.13	No
04-038177	HARFORD COUNTY MARYLAND	Jarrettsville Public Library	3722 Norrisville Road	Jarrettsville	21084	Library	No	0.11	No
04-039874	HARFORD COUNTY MARYLAND	Highway Maintenance 4th District Shop	1348 Coopstown Road	Forest Hill	21050	Maintenance Facility	No	0.11	No
04-042867	HARFORD COUNTY MD	Parker Conservation Area	N & WS Jolly Acres Road	White Hall	21161	Open Space	No	0.13	Yes
04-058313	HARFORD COUNTY MARYLAND	Rutledge Park	3973 Norrisville Road	Jarrettsville	21084	Park	No	0.07	No
04-063228	HARFORD COUNTY MARYLAND	5240 Norrisville Road - Braff Property	5240 Norrisville Road	White Hall	21161	Open Space	No	0.07	No
04-070526	HARFORD COUNTY MARYLAND	Eden Mill Park - Open Space	4610 Fawn Grove Road	Pylesville	21132	Open Space	No	0.13	No
04-076001	HARFORD COUNTY	W S Jolly Acres Road S of Norrisville	Jolly Acres Rd	White Hall	21161	Open Space	No	0.13	Yes
04-076907	HARFORD COUNTY MD	Norrisville Activity Center / Public Library	5310 Norrisville Road	White Hall	21161	Library	Yes	0.13	No
04-077776	HARFORD COUNTY	3653 Fallston Rd Jarrettsville Fox Meadows	3653 Fallston Rd	Jarrettsville	21084	Recreation / Community Center	No	0.05	Yes
04-082702	HARFORD COUNTY MARYLAND	Spring Meadows WWTP	1411 Dalewood Drive	Jarrettsville	21084	Wastewater Plant (17DP0870 Per	No	0.07	No
04-085787	HARFORD COUNTY MARYLAND	3889 Norrisville Rd N W of Jarrettsville	3889 Norrisville Rd	Jarrettsville	21084	Office Building	No	0.11	No
04-086287	BOARD OF EDUCATION	North Bend Elementary School	1445 North Bend Road	Jarrettsville	21084	School	No	0.07	No
04-089170	HARFORD COUNTY MARYLAND	3901 Norrisville Rd W of Jarrettsville	3901 Norrisville Road	Jarrettsville	21084	Private Residence	No	0.11	No
04-095529	HARFORD COUNTY MARYLAND	Right of Way to Highway's Fourth District Shop	Cooptown Road	Forest Hill	21050	Open Space	No	0.11	No
04-099710	HARFORD COUNTY MARYLAND	Off Ingleside Drive	Off Ingleside Drive	Jarrettsville	21084	Open Space	No	0.11	No
04-106210	HARFORD COUNTY MARYLAND	Eden Mill Park - Open Space	1624 Eden Mill Road	Pylesville	21132	Open Space	No	0.13	Yes
05-003431	BOARD OF EDUCATION	Dublin Ball Fields	Dublin Road	Street	21154	Open Space	No	0.44	No
05-003458	BOARD OF EDUCATION	North Harford Elementary School	120 Pylesville Road	Pylesville	21132	School	No	0.31	No
05-003458	BOARD OF EDUCATION	North Harford Middle School	112 Pylesville Road	Pylesville	21132	School	Yes	0.31	No
05-003466	HARFORD COUNTY MARYLAND	Highland Community Center	708 Highland Road	Street	21154	Recreation / Community Center	No	0.31	No
05-003474	BOARD OF EDUCATION OF	North Harford High School	211 Pylesville Road	Pylesville	21132	School	No	0.31	No
05-003482	BOARD OF EDUCATION OF	Darlington Elementary School	2119 Shuresville Road	Darlington	21034	School	No	0.41	No
05-003490	BOARD OF EDUCATION OF	Dublin Elementary School	1527 Whiteford Road	Street	21154	School	No	0.44	No
05-004586	HARFORD COUNTY	Across From Scarboro Landfill	3152 Scarboro Road	Street	21154	Open Space	No	0.31	No
05-004594	HARFORD COUNTY	3116 Sandy Hook Road	3116 Sandy Hook Road	Street	21154	Park	No	0.44	Yes
05-007003	HARFORD COUNTY	Scarboro Conservation Area	S S Route 440	Street	21154	Open Space	No	0.31	No
05-007070	HARFORD COUNTY	Harford Waste Disposal Center North Campus - Groundwate	3243 Scarboro Road	Street	21154	Waste Disposal Center	No	0.44	Yes
05-007682	HARFORD COUNTY	Harford Waste Disposal Center North Campus - White Hous	3243 Scarboro Road	Street	21154	Waste Disposal Center	No	0.44	No
05-014972	HARFORD COUNTY	Harford Waste Disposal Center South Campus - Mulch & Co	3127 Scarboro Road	Street	21154	Mulch and Composting Facility	No	0.44	Yes
05-016827	HARFORD COUNTY	Deer Creek Conservation Area	NWS of Rt. 1	Street	21154	Boat Ramp	No	0.44	Yes
05-016835	HARFORD COUNTY COMMISSIONERS	Line Bridge Landing	NE End Line Bridge Road	Whiteford	21160	Open Space	No	0.31	Yes
05-016843	HARFORD COUNTY COMMISSIONERS	3145 Scarboro Road	3145 Scarboro Road	Street	21154	Waste Disposal Center	No	0.44	No
05-016878	HARFORD COUNTY MARYLAND	Francis Silver Park	2124 Shuresville Road	Darlington	21034	Park	No	0.41	No
05-016886	HARFORD COUNTY MD	Highway Maintenance 3rd District Shop	1405 Pylesville Road	Whiteford	21160	Maintenance Facility	No	0.31	No
05-016894	HARFORD COUNTY MD	Emma Rockey Park	Rt. 1 & MD Rt. 440	Street	21154	Park	No	0.44	No
05-016908	HARFORD COUNTY MD	Deer Creek Conservation Area	ES of 136 Deer Creek	Street	21154	Open Space	No	0.41	Yes
05-016916	HARFORD COUNTY MD	Whiteford Public Library	2407 Whiteford Road	Whiteford	21160	Library	No	0.31	No
05-016924	HARFORD COUNTY MD	Darlington Public Library	1134 Main Street	Darlington	21034	Library	No	0.41	No
05-021901	HARFORD COUNTY MARYLAND	Landfill	3139 Scarboro Road	Street	21154	Waste Disposal Center	No	0.44	No
05-021928	HARFORD COUNTY MARYLAND	Harford Waste Disposal Center South Campus - Main Admin	3135 Scarboro Road	Street	21154	Waste Disposal Center	No	0.44	No
05-022940	HARFORD COUNTY MARYLAND	3100 Sandy Hook Road	3100 Sandy Hook Road	Street	21154	Unknown	No	0.44	Yes
05-023696	HARFORD COUNTY	115-A Scarboro Road	115-A Scarboro Road	Street	21154	Open Space	No	0.31	No
05-027594	HARFORD COUNTY MARYLAND	3231 Scarboro Road	3231 Scarboro Road	Street	21154	Waste Disposal Center	No	0.44	No
05-030463	HARFORD COUNTY MARYLAND	3200 Scarboro Road	3200 Scarboro Road	Street	21154	Unknown	No	0.31	No
05-032865	HARFORD COUNTY MARYLAND	Scarboro Hills Disc Golf Course	3128 Sandy Hook Road	Street	21154	Recreation / Community Center	Yes	0.44	Yes
05-033225	HARFORD COUNTY MARYLAND	S S Route 136 (@ Ridge Road)	S S Route 136 (@ Ridge Road)	Whiteford	21160	Open Space	No	0.31	No
05-038847	HARFORD COUNTY MARYLAND	3019 Dublin Road	3019 Dublin Road	Street	21154	Open Space	No	0.44	No
05-038855	HARFORD COUNTY MARYLAND	3031 Dublin Road	3031 Dublin Road	Street	21154	Unknown	No	0.44	No
05-038863	HARFORD COUNTY MARYLAND	E of Scarboro Rd	3029 Dublin Road	Street	21154	Unknown	No	0.44	No
05-038871	HARFORD COUNTY MARYLAND	Dublin Rd near Scarboro	Dublin Rd 0-0000	Street	21154	Waste Disposal Center	No	0.44	No
05-038898	HARFORD COUNTY MARYLAND	3029 A Dublin Rd Scarboro	3029 A Dublin Rd	Street	21154	Open Space	No	0.44	No
05-042356	HARFORD COUNTY MARYLAND	3317 Scarboro Road	3317 Scarboro Road	Street	21154	Unknown	No	0.44	No
05-048036	HARFORD COUNTY MD	Scarboro Landfill	Dublin Road	Street	21154	Waste Disposal Center	No	0.44	No
05-052459	HARFORD COUNTY MARYLAND	Dinning Property	3045 Dublin Road	Street	21154	Open Space	No	0.44	No
05-052467	HARFORD COUNTY MARYLAND	Dinning Property	3047 Dublin Road	Street	21154	Open Space	No	0.44	No
05-057264	HARFORD COUNTY	Off ROW W/S Red Road	Off ROW W/S Red Road	Whiteford	21160	Open Space	No	0.31	No
05-059097	HARFORD COUNTY MD	Par A Off Ady Rd, Copenhaver Rd Sub P97/34	Ady Rd	Street	21154	Open Space	No	0.31	No
05-059895	HARFORD COUNTY MARYLAND	4549 Conowingo Rd LD D Ashley Pt 101/63	4549 Conowingo Rd	Darlington	21034	Park	No	0.41	No
06-001564	HARFORD COUNTY MARYLAND	Mullins Landfill	S S Route 635	Havre de Gra	21078	Open Space	No	0.45	Yes
06-003028	HARFORD COUNTY MARYLAND	Edgewater Village Parks	S S Route 40	Edgewood	21040	Open Space	No	0.45	No
06-005896	HARFORD COUNTY MARYLAND	Eleanor & Millard Tydings Park	701 Oakington Road	Havre de Gra	21078	Open Space	No	0.45	Yes
06-010997	BOARD OF EDUCATION OF	Havre de Grace Middle and High School	445 Lewis Lane	Havre De Gra	21078	School	No	0.78	Yes
06-010997	BOARD OF EDUCATION OF	Havre de Grace Middle and High School	445 Lewis Lane	Havre De Gra	21078	School	No	0.78	Yes
06-011004	BOARD OF EDUCATION	W/S S Juniata Street	W/S S Juniata Street	Havre de Gra	21078	Annex	No	0.78	No
06-011055	BOARD OF EDUCATION OF	Meadowvale Elementary School	910 Grace View Drive	Havre De Gra	21078	School	No	0.5	No
06-011063	BOARD OF EDUCATION OF	Havre de Grace Elementary School	600 Juniata Street	Havre De Gra	21078	School	No	0.78	Yes
06-020119	HARFORD COUNTY MARYLAND	Citizens Nursing Home	415 Market Street	Havre de Gra	21078	Care & Rehabilitation Center	No	0.78	No
06-020194	HARFORD COUNTY COMMISSIONERS	Parking Lot	Lewis Street & Lodge Lane	Havre de Gra	21078	Parking Lot	No	0.78	No
06-034098	HARFORD COUNTY	Havre de Grace Public Library	120 North Union Avenue	Havre De Gra	21078	Library	No	0.78	No
06-039391	HARFORD COUNTY METROPOLITAN CON	Mullins Landfill	Near Swan Creek	Havre de Gra	21078	Open Space	No	0.45	Yes
06-039405	BOARD OF EDUCATION	Roye-Williams Elementary School	201 Oakington Road	Havre De Gra	21078	School	No	0.45	Yes
06-039421	HARFORD COUNTY COMMISSIONERS	Mullins Landfill	S S Post Road	Havre de Gra	21078	Open Space	No	0.45	Yes
06-039448	HARFORD COUNTY METROPOLITAN CON	Mullins Landfill	On Swan Creek	Havre de Gra	21078	Open Space	No	0.45	Yes
06-055745	HARFORD COUNTY	Swan Harbor Farm	401 Oakington Road	Havre de Gra	21078	Farm	No	0.45	Yes

06-059554	HARFORD COUNTY	Oakington Road	Oakington Road	Havre de Gra	21078	Open Space	No	0.45	No
01-138502	HARFORD COUNTY MARYLAND	E S Foster Knoll Drive	Foster Knoll Drive	Bel Air	21014	Open Space	No	0.5	No
01-236253	HARFORD COUNTY MARYLAND	Creamery Lane	1127 Belcamp Garth	Belcamp	21017	Open Space	No	0.42	No
01-376888	HARFORD COUNTY MD	Booster Station	1000 Magnolia Rd	Joppa	21085	Booster Station	No	0.73	No
01-396377	HARFORD COUNTY MARYLAND	Future Baseball Field	2825 12 Stones Road	Bel Air	231015	Open Space	No	0.46	No
01-397693	HARFORD COUNTY MARYLAND	Foster's Run	732 Outrigger Circle	Joppa	21085	Open Space	No	0.73	No
01-397694	HARFORD COUNTY MARYLAND	Foster's Run	730 Outrigger Circle	Joppa	21085	Open Space	No	0.73	No
01-397695	HARFORD COUNTY MARYLAND	Foster's Run	728 Outrigger Circle	Joppa	21085	Open Space	No	0.73	No
01-397696	HARFORD COUNTY MARYLAND	Foster's Run	726 Outrigger Circle	Joppa	21085	Open Space	No	0.73	No
01-397697	HARFORD COUNTY MARYLAND	Foster's Run	724 Outrigger Circle	Joppa	21085	Open Space	No	0.73	No
01-397698	HARFORD COUNTY MARYLAND	Foster's Run	722 Outrigger Circle	Joppa	21085	Open Space	No	0.73	No
01-397699	HARFORD COUNTY MARYLAND	Foster's Run	720 Outrigger Circle	Joppa	21085	Open Space	No	0.73	No
01-397700	HARFORD COUNTY MARYLAND	Foster's Run	718 Outriiger Circle	Joppa	21085	Open Space	No	0.73	No
01-397701	HARFORD COUNTY MARYLAND	Foster's Run	601 Galley Way	Joppa	21085	Open Space	No	0.73	No
01-397702	HARFORD COUNTY MARYLAND	Foster's Run	603 Galley Way	Joppa	21085	Open Space	No	0.73	No
01-397703	HARFORD COUNTY MARYLAND	Foster's Run	605 Galley Way	Joppa	21085	Open Space	No	0.73	No
01-397704	HARFORD COUNTY MARYLAND	Foster's Run	607 Galley Way	Joppa	21085	Open Space	No	0.73	No
01-397705	HARFORD COUNTY MARYLAND	Foster's Run	609 Galley Way	Joppa	21085	Open Space	No	0.73	No
01-397706	HARFORD COUNTY MARYLAND	Foster's Run	611 Galley Way	Joppa	21085	Open Space	No	0.73	No
01-397707	HARFORD COUNTY MARYLAND	Foster's Run	613 Galley Way	Joppa	21085	Open Space	No	0.73	No
01-397708	HARFORD COUNTY MARYLAND	Foster's Run	600 Galley Way	Joppa	21085	Open Space	No	0.73	No
01-397709	HARFORD COUNTY MARYLAND	Foster's Run	602 Galley Way	Joppa	21085	Open Space	No	0.73	No
01-397710	HARFORD COUNTY MARYLAND	Foster's Run	604 Galley Way	Joppa	21085	Open Space	No	0.73	No
01-397711	HARFORD COUNTY MARYLAND	Foster's Run	606 Galley Way	Joppa	21085	Open Space	No	0.73	No
01-397712	HARFORD COUNTY MARYLAND	Foster's Run	608 Galley Way	Joppa	21085	Open Space	No	0.73	No
01-397713	HARFORD COUNTY MARYLAND	Foster's Run	610 Galley Way	Joppa	21085	Open Space	No	0.73	No
01-397714	HARFORD COUNTY MARYLAND	Foster's Run	612 Galley Way	Joppa	21085	Open Space	No	0.73	No
01-397715	HARFORD COUNTY MARYLAND	Foster's Run	609 Crows Nest Rd	Joppa	21085	Open Space	No	0.73	No
01-397716	HARFORD COUNTY MARYLAND	Foster's Run	607 Crows Nest Rd	Joppa	21085	Open Space	No	0.73	No
01-397717	HARFORD COUNTY MARYLAND	Foster's Run	605 Crows Nest Rd	Joppa	21085	Open Space	No	0.73	No
01-397718	HARFORD COUNTY MARYLAND	Foster's Run	603 Crows Nest Rd	Joppa	21085	Open Space	No	0.73	No
01-397719	HARFORD COUNTY MARYLAND	Foster's Run	601 Crows Nest Rd	Joppa	21085	Open Space	No	0.73	No
01-397720	HARFORD COUNTY MARYLAND	Foster's Run	721 Outrigger Circle	Joppa	21085	Open Space	No	0.73	No
01-397721	HARFORD COUNTY MARYLAND	Foster's Run	723 Outrigger Circle	Joppa	21085	Open Space	No	0.73	No
01-397722	HARFORD COUNTY MARYLAND	Foster's Run	615 Galley Way	Joppa	21085	Open Space	No	0.73	No
01-397724	HARFORD COUNTY MARYLAND	Foster's Run	619 Galley Way	Joppa	21085	Open Space	No	0.73	No
01-397725	HARFORD COUNTY MARYLAND	Foster's Run	621 Galley Way	Joppa	21085	Open Space	No	0.73	No
01-397726	HARFORD COUNTY MARYLAND	Foster's Run	623 Galley Way	Joppa	21085	Open Space	No	0.73	No
01-397727	HARFORD COUNTY MARYLAND	Foster's Run	625 Galley Way	Joppa	21085	Open Space	No	0.73	No
01-397728	HARFORD COUNTY MARYLAND	Foster's Run	614 Galley Way	Joppa	21085	Open Space	No	0.73	No
01-397729	HARFORD COUNTY MARYLAND	Foster's Run	616 Galley Way	Joppa	21085	Open Space	No	0.73	No
01-397730	HARFORD COUNTY MARYLAND	Foster's Run	618 Galley Way	Joppa	21085	Open Space	No	0.73	No
01-397731	HARFORD COUNTY MARYLAND	Foster's Run	620 Galley Way	Joppa	21085	Open Space	No	0.73	No
01-397732	HARFORD COUNTY MARYLAND	Foster's Run	622 Galley Way	Joppa	21085	Open Space	No	0.73	No
01-397733	HARFORD COUNTY MARYLAND	Foster's Run	624 Galley Way	Joppa	21085	Open Space	No	0.73	No
01-397734	HARFORD COUNTY MARYLAND	Foster's Run	626 Galley Way	Joppa	21085	Open Space	No	0.73	No
01-397735	HARFORD COUNTY MARYLAND	Foster's Run	628 Galley Way	Joppa	21085	Open Space	No	0.73	No
01-397736	HARFORD COUNTY MARYLAND	Foster's Run	630 Galley Way	Joppa	21085	Open Space	No	0.73	No
01-397737	HARFORD COUNTY MARYLAND	Foster's Run	632 Galley Way	Joppa	21085	Open Space	No	0.73	No
01-397738	HARFORD COUNTY MARYLAND	Foster's Run	634 Galley Way	Joppa	21085	Open Space	No	0.73	No
01-397739	HARFORD COUNTY MARYLAND	Foster's Run	636 Galley Way	Joppa	21085	Open Space	No	0.73	No
01-397740	HARFORD COUNTY MARYLAND	Foster's Run	623 Crows Nest Way	Joppa	21085	Open Space	No	0.73	No
01-397741	HARFORD COUNTY MARYLAND	Foster's Run	621 Crows Nest Way	Joppa	21085	Open Space	No	0.73	No
01-397742	HARFORD COUNTY MARYLAND	Foster's Run	619 Crows Nest Way	Joppa	21085	Open Space	No	0.73	No
01-397743	HARFORD COUNTY MARYLAND	Foster's Run	617 Crows Nest Way	Joppa	21085	Open Space	No	0.73	No
01-397744	HARFORD COUNTY MARYLAND	Foster's Run	615 Crows Nest Way	Joppa	21085	Open Space	No	0.73	No
01-397745	HARFORD COUNTY MARYLAND	Foster's Run	613 Crows Nest Way	Joppa	21085	Open Space	No	0.73	No
01-397746	HARFORD COUNTY MARYLAND	Foster's Run	611 Crows Nest Way	Joppa	21085	Open Space	No	0.73	No
01-397747	HARFORD COUNTY MARYLAND	Foster's Run	627 Galley Way	Joppa	21085	Open Space	No	0.73	No
01-397748	HARFORD COUNTY MARYLAND	Foster's Run	716 Outrigger Circle	Joppa	21085	Open Space	No	0.73	No
01-397749	HARFORD COUNTY MARYLAND	Foster's Run	714 Outrigger Circle	Joppa	21085	Open Space	No	0.73	No
01-397750	HARFORD COUNTY MARYLAND	Foster's Run	712 Outrigger Circle	Joppa	21085	Open Space	No	0.73	No
01-397751	HARFORD COUNTY MARYLAND	Foster's Run	710 Outrigger Circle	Joppa	21085	Open Space	No	0.73	No
01-397752	HARFORD COUNTY MARYLAND	Foster's Run	708 Outrigger Circle	Joppa	21085	Open Space	No	0.73	No
01-397753	HARFORD COUNTY MARYLAND	Foster's Run	706 Outrigger Circle	Joppa	21085	Open Space	No	0.73	No
01-397754	HARFORD COUNTY MARYLAND	Foster's Run	704 Outrigger Circle	Joppa	21085	Open Space	No	0.73	No
01-397755	HARFORD COUNTY MARYLAND	Foster's Run	702 Outrigger Circle	Joppa	21085	Open Space	No	0.73	No
01-397756	HARFORD COUNTY MARYLAND	Foster's Run	603 Schooner Court	Joppa	21085	Open Space	No	0.73	No
01-397757	HARFORD COUNTY MARYLAND	Foster's Run	605 Schooner Court	Joppa	21085	Open Space	No	0.73	No
01-397758	HARFORD COUNTY MARYLAND	Foster's Run	607 Schooner Court	Joppa	21085	Open Space	No	0.73	No
01-397759	HARFORD COUNTY MARYLAND	Foster's Run	608 Schooner Court	Joppa	21085	Open Space	No	0.73	No
01-397760	HARFORD COUNTY MARYLAND	Foster's Run	606 Schooner Court	Joppa	21085	Open Space	No	0.73	No
01-397761	HARFORD COUNTY MARYLAND	Foster's Run	604 Schooner Court	Joppa	21085	Open Space	No	0.73	No
01-397762	HARFORD COUNTY MARYLAND	Foster's Run	602 Schooner Court	Joppa	21085	Open Space	No	0.73	No
01-397763	HARFORD COUNTY MARYLAND	Foster's Run	700 Outrigger Circle	Joppa	21085	Open Space	No	0.73	No
01-397764	HARFORD COUNTY MARYLAND	Foster's Run	713 Outrigger Circle	Joppa	21085	Open Space	No	0.73	No
01-397765	HARFORD COUNTY MARYLAND	Foster's Run	602 Crows Nest Way	Joppa	21085	Open Space	No	0.73	No
01-397766	HARFORD COUNTY MARYLAND	Foster's Run	604 Crows Nest Way	Joppa	21085	Open Space	No	0.73	No
01-397767	HARFORD COUNTY MARYLAND	Foster's Run	606 Crows Nest Way	Joppa	21085	Open Space	No	0.73	No
01-397768	HARFORD COUNTY MARYLAND	Foster's Run	608 Crows Nest Way	Joppa	21085	Open Space	No	0.73	No
01-397769	HARFORD COUNTY MARYLAND	Foster's Run	707 Outrigger Circle	Joppa	21085	Open Space	No	0.73	No
01-397770	HARFORD COUNTY MARYLAND	Foster's Run	709 Outrigger Circle	Joppa	21085	Open Space	No	0.73	No
01-397771	HARFORD COUNTY MARYLAND	Foster's Run	711 Outrigger Circle	Joppa	21085	Open Space	No	0.73	No
01-397772	HARFORD COUNTY MARYLAND	Foster's Run	615 Outrigger Circle	Joppa	21085	Open Space	No	0.73	No
01-397773	HARFORD COUNTY MARYLAND	Foster's Run	703 Barque Terr	Joppa	21085	Open Space	No	0.73	No
01-397774	HARFORD COUNTY MARYLAND	Foster's Run	705 Barque Terr	Joppa	21085	Open Space	No	0.73	No
01-397775	HARFORD COUNTY MARYLAND	Foster's Run	707 Barque Terr	Joppa	21085	Open Space	No	0.73	No
01-397776	HARFORD COUNTY MARYLAND	Foster's Run	709 Barque Terr	Joppa	21085	Open Space	No	0.73	No
01-397777	HARFORD COUNTY MARYLAND	Foster's Run	711 Barque Terr	Joppa	21085	Open Space	No	0.73	No
01-397778	HARFORD COUNTY MARYLAND	Foster's Run	710 Barque Terr	Joppa	21085	Open Space	No	0.73	Yes
01-397779	HARFORD COUNTY MARYLAND	Foster's Run	708 Barque Terr	Joppa	21085	Open Space	No	0.73	No
01-397780	HARFORD COUNTY MARYLAND	Foster's Run	706 Barque Terr	Joppa	21085	Open Space	No	0.73	No
01-397781	HARFORD COUNTY MARYLAND	Foster's Run	704 Barque Terr	Joppa	21085	Open Space	No	0.73	No
01-397782	HARFORD COUNTY MARYLAND	Foster's Run	702 Barque Terr	Joppa	21085	Open Space	No	0.73	No
01-397783	HARFORD COUNTY MARYLAND	Foster's Run	609 Outrigger Circle	Joppa	21085	Open Space	No	0.73	No
01-397784	HARFORD COUNTY MARYLAND	Foster's Run	607 Outrigger Circle	Joppa	21085	Open Space	No	0.73	No
01-397785	HARFORD COUNTY MARYLAND	Foster's Run	605 Outrigger Circle	Joppa	21085	Open Space	No	0.73	No
01-397786	HARFORD COUNTY MARYLAND	Foster's Run	603 Outrigger Circle	Joppa	21085	Open Space	No	0.73	No
01-397787	HARFORD COUNTY MARYLAND	Foster's Run	610 Outrigger Circle	Joppa	21085	Open Space	No	0.73	No
01-397788	HARFORD COUNTY MARYLAND	Foster's Run	608 Outrigger Circle	Joppa	21085	Open Space	No	0.73	No
01-397789	HARFORD COUNTY MARYLAND	Foster's Run	606 Outrigger Circle	Joppa	21085	Open Space	No	0.73	No
01-397790	HARFORD COUNTY MARYLAND	Foster's Run	604 Outrigger Circle	Joppa	21085	Open Space	No	0.73	No
01-397791	HARFORD COUNTY MARYLAND	Foster's Run	601 Outrigger Circle	Joppa	21085	Open Space	No	0.73	No

01-397792	HARFORD COUNTY MARYLAND	Foster's Run	702 Tack Court	Joppa	21085	Open Space	No	0.73	No
01-397793	HARFORD COUNTY MARYLAND	Foster's Run	704 Tack Court	Joppa	21085	Open Space	No	0.73	No
01-397794	HARFORD COUNTY MARYLAND	Foster's Run	706 Tack Court	Joppa	21085	Open Space	No	0.73	No
01-397795	HARFORD COUNTY MARYLAND	Foster's Run	707 Tack Court	Joppa	21085	Open Space	No	0.73	No
01-397796	HARFORD COUNTY MARYLAND	Foster's Run	705 Tack Court	Joppa	21085	Open Space	No	0.73	No
01-397797	HARFORD COUNTY MARYLAND	Foster's Run	703 Tack Court	Joppa	21085	Open Space	No	0.73	No
01-397798	HARFORD COUNTY MARYLAND	Foster's Run	583 Outrigger Circle	Joppa	21085	Open Space	No	0.73	No
01-397799	HARFORD COUNTY MARYLAND	Foster's Run	581 Outrigger Circle	Joppa	21085	Open Space	No	0.73	No
01-397800	HARFORD COUNTY MARYLAND	Foster's Run	579 Outrigger Circle	Joppa	21085	Open Space	No	0.73	No
01-397801	HARFORD COUNTY MARYLAND	Foster's Run	577 Outrigger Circle	Joppa	21085	Open Space	No	0.73	No
01-397802	HARFORD COUNTY MARYLAND	Foster's Run	575 Outrigger Circle	Joppa	21085	Open Space	No	0.73	No
01-397803	HARFORD COUNTY MARYLAND	Foster's Run	701 Catamaran Court	Joppa	21085	Open Space	No	0.73	No
01-397804	HARFORD COUNTY MARYLAND	Foster's Run	703 Catamaran Court	Joppa	21085	Open Space	No	0.73	No
01-397805	HARFORD COUNTY MARYLAND	Foster's Run	705 Catamaran Court	Joppa	21085	Open Space	No	0.73	No
01-397806	HARFORD COUNTY MARYLAND	Foster's Run	707 Catamaran Court	Joppa	21085	Open Space	No	0.73	No
01-397807	HARFORD COUNTY MARYLAND	Foster's Run	704 Catamaran Court	Joppa	21085	Open Space	No	0.73	No
01-397808	HARFORD COUNTY MARYLAND	Foster's Run	702 Catamaran Court	Joppa	21085	Open Space	No	0.73	No
01-397809	HARFORD COUNTY MARYLAND	Foster's Run	700 Catamaran Court	Joppa	21085	Open Space	No	0.73	No
01-397810	HARFORD COUNTY MARYLAND	Foster's Run	602 Outrigger Circle	Joppa	21085	Open Space	No	0.73	No
01-397811	HARFORD COUNTY MARYLAND	Foster's Run	600 Outrigger Circle	Joppa	21085	Open Space	No	0.73	No
01-397812	HARFORD COUNTY MARYLAND	Foster's Run	580 Outrigger Circle	Joppa	21085	Open Space	No	0.73	No
01-397813	HARFORD COUNTY MARYLAND	Foster's Run	578 Outrigger Circle	Joppa	21085	Open Space	No	0.73	No
01-397814	HARFORD COUNTY MARYLAND	Foster's Run	576 Outrigger Circle	Joppa	21085	Open Space	No	0.73	No
01-397815	HARFORD COUNTY MARYLAND	Foster's Run	573 Outrigger Circle	Joppa	21085	Open Space	No	0.73	No
01-397816	HARFORD COUNTY MARYLAND	Foster's Run	571 Outrigger Circle	Joppa	21085	Open Space	No	0.73	No
01-397817	HARFORD COUNTY MARYLAND	Foster's Run	569 Outrigger Circle	Joppa	21085	Open Space	No	0.73	No
01-397818	HARFORD COUNTY MARYLAND	Foster's Run	567 Outrigger Circle	Joppa	21085	Open Space	No	0.73	No
01-397819	HARFORD COUNTY MARYLAND	Foster's Run	565 Outrigger Circle	Joppa	21085	Open Space	No	0.73	No
01-397820	HARFORD COUNTY MARYLAND	Foster's Run	563 Outrigger Circle	Joppa	21085	Open Space	No	0.73	No
01-397821	HARFORD COUNTY MARYLAND	Foster's Run	561 Outrigger Circle	Joppa	21085	Open Space	No	0.73	No
01-397822	HARFORD COUNTY MARYLAND	Foster's Run	559 Outrigger Circle	Joppa	21085	Open Space	No	0.73	No
01-397823	HARFORD COUNTY MARYLAND	Foster's Run	557 Outrigger Circle	Joppa	21085	Open Space	No	0.73	No
01-397824	HARFORD COUNTY MARYLAND	Foster's Run	555 Outrigger Circle	Joppa	21085	Open Space	No	0.73	No
01-397825	HARFORD COUNTY MARYLAND	Foster's Run	553 Outrigger Circle	Joppa	21085	Open Space	No	0.73	No
01-397826	HARFORD COUNTY MARYLAND	Foster's Run	551 Outrigger Circle	Joppa	21085	Open Space	No	0.73	No
01-397827	HARFORD COUNTY MARYLAND	Foster's Run	549 Outrigger Circle	Joppa	21085	Open Space	No	0.73	No
01-397828	HARFORD COUNTY MARYLAND	Foster's Run	547 Outrigger Circle	Joppa	21085	Open Space	No	0.73	No
01-397829	HARFORD COUNTY MARYLAND	Foster's Run	420 Dembytown Road	Joppa	21085	Open Space	No	0.73	No
01-397830	HARFORD COUNTY MARYLAND	Foster's Run	418 Dembytown Road	Joppa	21085	Open Space	No	0.73	No
01-397831	HARFORD COUNTY MARYLAND	Foster's Run	416 Dembytown Road	Joppa	21085	Open Space	No	0.73	No
01-397832	HARFORD COUNTY MARYLAND	Foster's Run	422 Dembytown Road	Joppa	21085	Open Space	No	0.73	No
01-397833	HARFORD COUNTY MARYLAND	Foster's Run	Dembytown Road	Joppa	21085	Open Space	No	0.73	Yes
01-397834	HARFORD COUNTY MARYLAND	Foster's Run	Trimble Road	Joppa	21085	Open Space	No	0.73	Yes
01-397835	HARFORD COUNTY MARYLAND	Foster's Run	500 Barnacle Lane	Joppa	21085	Open Space	No	0.73	No
01-397836	HARFORD COUNTY MARYLAND	Foster's Run	403 Whaler Court	Joppa	21085	Open Space	No	0.73	No
01-397837	HARFORD COUNTY MARYLAND	Foster's Run	405 Whaler Court	Joppa	21085	Open Space	No	0.73	No
01-397838	HARFORD COUNTY MARYLAND	Foster's Run	404 Whaler Court	Joppa	21085	Open Space	No	0.73	No
01-397839	HARFORD COUNTY MARYLAND	Foster's Run	402 Whaler Court	Joppa	21085	Open Space	No	0.73	No
01-397840	HARFORD COUNTY MARYLAND	Foster's Run	400 Whaler Court	Joppa	21085	Open Space	No	0.73	No
01-397841	HARFORD COUNTY MARYLAND	Foster's Run	Whaler Court	Joppa	21085	Open Space	No	0.73	No
01-397842	HARFORD COUNTY MARYLAND	Foster's Run	580 Trimble Road	Joppa	21085	Open Space	No	0.73	No
01-397843	HARFORD COUNTY MARYLAND	Foster's Run	523 Barnacle Lane	Joppa	21085	Open Space	No	0.73	No
01-397844	HARFORD COUNTY MARYLAND	Foster's Run	521 Barnacle Lane	Joppa	21085	Open Space	No	0.73	No
01-397845	HARFORD COUNTY MARYLAND	Foster's Run	519 Barnacle Lane	Joppa	21085	Open Space	No	0.73	No
01-397846	HARFORD COUNTY MARYLAND	Foster's Run	517 Barnacle Lane	Joppa	21085	Open Space	No	0.73	No
01-397847	HARFORD COUNTY MARYLAND	Foster's Run	515 Barnacle Lane	Joppa	21085	Open Space	No	0.73	No
01-397848	HARFORD COUNTY MARYLAND	Foster's Run	513 Barnacle Lane	Joppa	21085	Open Space	No	0.73	No
01-397849	HARFORD COUNTY MARYLAND	Foster's Run	511 Barnacle Lane	Joppa	21085	Open Space	No	0.73	No
01-397850	HARFORD COUNTY MARYLAND	Foster's Run	509 Barnacle Lane	Joppa	21085	Open Space	No	0.73	No
01-397851	HARFORD COUNTY MARYLAND	Foster's Run	507 Barnacle Lane	Joppa	21085	Open Space	No	0.73	No
01-397852	HARFORD COUNTY MARYLAND	Foster's Run	505 Barnacle Lane	Joppa	21085	Open Space	No	0.73	No
01-397853	HARFORD COUNTY MARYLAND	Foster's Run	503 Barnacle Lane	Joppa	21085	Open Space	No	0.73	No
01-397854	HARFORD COUNTY MARYLAND	Foster's Run	501 Barnacle Lane	Joppa	21085	Open Space	No	0.73	No
01-397855	HARFORD COUNTY MARYLAND	Foster's Run	734 Outrigger Circle	Joppa	21085	Open Space	No	0.73	No
01-397856	HARFORD COUNTY MARYLAND	Foster's Run	736 Outrigger Circle	Joppa	21085	Open Space	No	0.73	No
01-397857	HARFORD COUNTY MARYLAND	Foster's Run	608 Scuttle Court	Joppa	21085	Open Space	No	0.73	No
01-397858	HARFORD COUNTY MARYLAND	Foster's Run	606 Scuttle Court	Joppa	21085	Open Space	No	0.73	No
01-397859	HARFORD COUNTY MARYLAND	Foster's Run	604 Scuttle Court	Joppa	21085	Open Space	No	0.73	No
01-397860	HARFORD COUNTY MARYLAND	Foster's Run	602 Scuttle Court	Joppa	21085	Open Space	No	0.73	No
01-397861	HARFORD COUNTY MARYLAND	Foster's Run	735 Outrigger Circle	Joppa	21085	Open Space	No	0.73	No
01-397862	HARFORD COUNTY MARYLAND	Foster's Run	530 Outrigger Circle	Joppa	21085	Open Space	No	0.73	No
01-397863	HARFORD COUNTY MARYLAND	Foster's Run	756 Outrigger Circle	Joppa	21085	Open Space	No	0.73	No
01-397864	HARFORD COUNTY MARYLAND	Foster's Run	748 Outrigger Circle	Joppa	21085	Open Space	No	0.73	No
01-397865	HARFORD COUNTY MARYLAND	Foster's Run	746 Outrigger Circle	Joppa	21085	Open Space	No	0.73	No
01-397866	HARFORD COUNTY MARYLAND	Foster's Run	744 Outrigger Circle	Joppa	21085	Open Space	No	0.73	No
01-397867	HARFORD COUNTY MARYLAND	Foster's Run	742 Outrigger Circle	Joppa	21085	Open Space	No	0.73	No
01-397868	HARFORD COUNTY MARYLAND	Foster's Run	740 Outrigger Circle	Joppa	21085	Open Space	No	0.73	No
01-397869	HARFORD COUNTY MARYLAND	Foster's Run	738 Outrigger Circle	Joppa	21085	Open Space	No	0.73	No
01-397870	HARFORD COUNTY MARYLAND	Foster's Run	534 Outrigger Circle	Joppa	21085	Open Space	No	0.73	No
01-397871	HARFORD COUNTY MARYLAND	Foster's Run	747 Outrigger Circle	Joppa	21085	Open Space	No	0.73	No
01-397872	HARFORD COUNTY MARYLAND	Foster's Run	745 Outrigger Circle	Joppa	21085	Open Space	No	0.73	No
01-397873	HARFORD COUNTY MARYLAND	Foster's Run	743 Outrigger Circle	Joppa	21085	Open Space	No	0.73	No
01-397874	HARFORD COUNTY MARYLAND	Foster's Run	741 Outrigger Circle	Joppa	21085	Open Space	No	0.73	No
01-397875	HARFORD COUNTY MARYLAND	Foster's Run	603 Scuttle Court	Joppa	21085	Open Space	No	0.73	No
01-397876	HARFORD COUNTY MARYLAND	Foster's Run	605 Scuttle Court	Joppa	21085	Open Space	No	0.73	No
01-397877	HARFORD COUNTY MARYLAND	Foster's Run	607 Scuttle Court	Joppa	21085	Open Space	No	0.73	No
01-397878	HARFORD COUNTY MARYLAND	Foster's Run	609 Scuttle Court	Joppa	21085	Open Space	No	0.73	No
01-397879	HARFORD COUNTY MARYLAND	Foster's Run	611 Scuttle Court	Joppa	21085	Open Space	No	0.73	No
01-397880	HARFORD COUNTY MARYLAND	Foster's Run	Galley Way	Joppa	21085	Open Space	No	0.73	No
01-397889	HARFORD COUNTY MARYLAND	Foster's Run	527 Barnacle Ln	Joppa	21085	Open Space	No	0.73	No
01-397890	HARFORD COUNTY MARYLAND	Foster's Run	409 Rudder Ln	Joppa	21085	Open Space	No	0.73	No
01-397891	HARFORD COUNTY MARYLAND	Foster's Run	407 Rudder Ln	Joppa	21085	Open Space	No	0.73	No
01-397892	HARFORD COUNTY MARYLAND	Foster's Run	405 Rudder Ln	Joppa	21085	Open Space	No	0.73	No
01-397893	HARFORD COUNTY MARYLAND	Foster's Run	403 Rudder Ln	Joppa	21085	Open Space	No	0.73	No
01-397894	HARFORD COUNTY MARYLAND	Foster's Run	525 Barnacle Ln	Joppa	21085	Open Space	No	0.73	No
01-397895	HARFORD COUNTY MARYLAND	Foster's Run	545 Outrigger Circle	Joppa	21085	Open Space	No	0.73	No
01-397896	HARFORD COUNTY MARYLAND	Foster's Run	543 Outrigger Circle	Joppa	21085	Open Space	No	0.73	No
01-397897	HARFORD COUNTY MARYLAND	Foster's Run	541 Outrigger Circle	Joppa	21085	Open Space	No	0.73	No
01-397898	HARFORD COUNTY MARYLAND	Foster's Run	539 Outrigger Circle	Joppa	21085	Open Space	No	0.73	No
01-397899	HARFORD COUNTY MARYLAND	Foster's Run	537 Outrigger Circle	Joppa	21085	Open Space	No	0.73	No
01-397900	HARFORD COUNTY MARYLAND	Foster's Run	535 Outrigger Circle	Joppa	21085	Open Space	No	0.73	No
01-397901	HARFORD COUNTY MARYLAND	Foster's Run	533 Outrigger Circle	Joppa	21085	Open Space	No	0.73	No
01-397902	HARFORD COUNTY MARYLAND	Foster's Run	531 Outrigger Circle	Joppa	21085	Open Space	No	0.73	No

01-397903	HARFORD COUNTY MARYLAND	Foster's Run	542 Outrigger Circle	Joppa	21085	Open Space	No	0.73	No
01-397904	HARFORD COUNTY MARYLAND	Foster's Run	540 Outrigger Circle	Joppa	21085	Open Space	No	0.73	No
01-397905	HARFORD COUNTY MARYLAND	Foster's Run	538 Outrigger Circle	Joppa	21085	Open Space	No	0.73	No
01-397906	HARFORD COUNTY MARYLAND	Foster's Run	536 Outrigger Circle	Joppa	21085	Open Space	No	0.73	No
01-397907	HARFORD COUNTY MARYLAND	Foster's Run	506 Barnacle Lane	Joppa	21085	Open Space	No	0.73	No
01-397908	HARFORD COUNTY MARYLAND	Foster's Run	405 Keel Court	Joppa	21085	Open Space	No	0.73	No
01-397909	HARFORD COUNTY MARYLAND	Foster's Run	407 Keel Court	Joppa	21085	Open Space	No	0.73	No
01-397910	HARFORD COUNTY MARYLAND	Foster's Run	409 Keel Court	Joppa	21085	Open Space	No	0.73	No
01-397911	HARFORD COUNTY MARYLAND	Foster's Run	411 Keel Court	Joppa	21085	Open Space	No	0.73	No
01-397912	HARFORD COUNTY MARYLAND	Foster's Run	413 Keel Court	Joppa	21085	Open Space	No	0.73	No
01-397913	HARFORD COUNTY MARYLAND	Foster's Run	403 Keel Court	Joppa	21085	Open Space	No	0.73	No
01-397914	HARFORD COUNTY MARYLAND	Foster's Run	510 Barnacle Ln	Joppa	21085	Open Space	No	0.73	No
01-397915	HARFORD COUNTY MARYLAND	Foster's Run	512 Barnacle Ln	Joppa	21085	Open Space	No	0.73	No
01-397916	HARFORD COUNTY MARYLAND	Foster's Run	514 Barnacle Ln	Joppa	21085	Open Space	No	0.73	No
01-397917	HARFORD COUNTY MARYLAND	Foster's Run	403 Stern Court	Joppa	21085	Open Space	No	0.73	No
01-397918	HARFORD COUNTY MARYLAND	Foster's Run	405 Stern Court	Joppa	21085	Open Space	No	0.73	No
01-397919	HARFORD COUNTY MARYLAND	Foster's Run	407 Stern Court	Joppa	21085	Open Space	No	0.73	No
01-397920	HARFORD COUNTY MARYLAND	Foster's Run	408 Stern Court	Joppa	21085	Open Space	No	0.73	No
01-397921	HARFORD COUNTY MARYLAND	Foster's Run	406 Stern Court	Joppa	21085	Open Space	No	0.73	No
01-397922	HARFORD COUNTY MARYLAND	Foster's Run	404 Stern Court	Joppa	21085	Open Space	No	0.73	No
01-397923	HARFORD COUNTY MARYLAND	Foster's Run	402 Stern Court	Joppa	21085	Open Space	No	0.73	No
01-397924	HARFORD COUNTY MARYLAND	Foster's Run	401 Stern Court	Joppa	21085	Open Space	No	0.73	No
01-397925	HARFORD COUNTY MARYLAND	Foster's Run	400 Stern Court	Joppa	21085	Open Space	No	0.73	No
01-397926	HARFORD COUNTY MARYLAND	Foster's Run	422 Rudder Ln	Joppa	21085	Open Space	No	0.73	No
01-397927	HARFORD COUNTY MARYLAND	Foster's Run	420 Rudder Ln	Joppa	21085	Open Space	No	0.73	No
01-397928	HARFORD COUNTY MARYLAND	Foster's Run	418 Rudder Ln	Joppa	21085	Open Space	No	0.73	No
01-397929	HARFORD COUNTY MARYLAND	Foster's Run	423 Rudder Ln	Joppa	21085	Open Space	No	0.73	No
01-397930	HARFORD COUNTY MARYLAND	Foster's Run	421 Rudder Ln	Joppa	21085	Open Space	No	0.73	No
01-397931	HARFORD COUNTY MARYLAND	Foster's Run	419 Rudder Ln	Joppa	21085	Open Space	No	0.73	No
01-397932	HARFORD COUNTY MARYLAND	Foster's Run	417 Rudder Ln	Joppa	21085	Open Space	No	0.73	No
01-397933	HARFORD COUNTY MARYLAND	Foster's Run	415 Rudder Ln	Joppa	21085	Open Space	No	0.73	No
01-397934	HARFORD COUNTY MARYLAND	Foster's Run	413 Rudder Ln	Joppa	21085	Open Space	No	0.73	No
01-397935	HARFORD COUNTY MARYLAND	Foster's Run	411 Rudder Ln	Joppa	21085	Open Space	No	0.73	No
01-397936	HARFORD COUNTY MARYLAND	Foster's Run	Rudder	Joppa	21085	Open Space	No	0.73	No
01-397937	HARFORD COUNTY MARYLAND	Foster's Run	426 Rudder Ln	Joppa	21085	Open Space	No	0.73	No
01-397938	HARFORD COUNTY MARYLAND	Foster's Run	424 Rudder Ln	Joppa	21085	Open Space	No	0.73	No
01-397939	HARFORD COUNTY MARYLAND	Foster's Run	Keel Ct	Joppa	21085	Open Space	No	0.73	Yes
01-397940	HARFORD COUNTY MARYLAND	Foster's Run	Foster Run Blvd	Joppa	21085	Open Space	No	0.73	Yes
01-397941	HARFORD COUNTY MARYLAND	Foster's Run	Foster Run Blvd	Joppa	21085	Open Space	No	0.73	No
01-401979	HARFORD COUNTY MARYLAND	4790 Sanibel Square	4790 Sanibel Square	Aberdeen	21001	Pumping Station	No	0.49	No
02-040352	HARFORD COUNTY MARYLAND	HEAT Center	3658 Churchville Road	Aberdeen	21001	Open Space	No	0.42	No
02-051508	HARFORD COUNTY MARYLAND	HEAT Center	3656 Churchville Road	Aberdeen	21001	Open Space	No	0.42	No
02-056321	HARFORD COUNTY	Converge Parking	3663 Churchville Rd	Aberdeen	21001	Open Space	No	0.42	No
02-060167	HARFORD COUNTY	Converge Parking Lot	Route 22	Aberdeen	21001	Parking Lot	No	0.42	No
02-081903	HARFORD COUNTY MARYLAND	Mitchell Avenue	Mitchell Avenue	Aberdeen	21001	Open Space	No	0.82	No
03-008304	HARFORD COUNTY MARYLAND	Young Property	202 South Main Street	Bel Air	21014	Office Building	No	0.34	No
03-008576	HARFORD COUNTY MARYLAND	M&T Bank	5 South Bond Street	Bel Air	21014	Parking Lot	No	0.34	No
03-008584	HARFORD COUNTY MARYLAND	M&T Bank	12 Office Street	Bel Air	21014	Office Building	No	0.34	No
03-023621	HARFORD COUNTY MARYLAND	M&T Bank	1 South Bond Street	Bel Air	21014	Parking Lot	No	0.34	No
03-025381	HARFORD COUNTY MARYLAND	Young Property	200 South Main Street	Bel Air	21014	Office Building	No	0.34	No
03-025403	HARFORD COUNTY MARYLAND	Young Property	15 E Churchville Rd	Bel Air	21014	Office Building	No	0.34	No
03-056783	HARFORD COUNTY MARYLAND	Old Upholstery Shop/ FEMA	810 Conowingo Road	Bel Air	21014	Open Space	No	0.03	Yes
03-057534	BOARD OF EDUCATION OF	Eva Mar - Future Harford Academy	301 N Fountain Green Rd	Bel Air	21015	Open Space	No	0.09	No
03-057534	HARFORD COUNTY MARYLAND		301 N Fountain Green Rd	Bel Air	21015	Open Space	No	0.09	No
03-057682	HARFORD COUNTY MARYLAND	Quesenberry Property	1301 Carrs Mill Road	Fallston	21047	Open Space	No	0.03	No
05-009332	HARFORD COUNTY MARYLAND	Whiteford Volunteer Fire Company	Jones Road	Whiteford	21160	Open Space	No	0.31	No
05-011590	HARFORD COUNTY	2953 Dublin Road SE of Street	2953 Dublin Road	Street	21154	Open Space	No	0.31	No
05-030668	HARFORD COUNTY MARYLAND	Stafford Road	Stafford Road	Darlington	21034	Open Space	No	0.41	No
05-038812	HARFORD COUNTY MARYLAND	3037 Dublin Road	3037 Dublin Road	Street	21154	Unknown	No	0.44	No
05-059127	HARFORD COUNTY MD	Par D Off Ady Rd, Copenhaver Rd Sub P97/34	Ady Rd	Street	21154	Open Space	No	0.31	No
05-059135	HARFORD COUNTY MD	Par E Off Ady Rd, Copenhaver Rd Sub P97/34	Ady Rd	Street	21154	Open Space	No	0.31	No
05-059143	HARFORD COUNTY MD	Par F Off Ady Rd, Copenhaver Rd Sub P97/34	Ady Rd	Street	21154	Open Space	No	0.31	No
05-061083	HARFORD COUNTY MARYLAND	North Harford Station	50 Pylesville Road	Pylesville	21132	Fire Station	Yes	0.31	No
06-002072	HARFORD COUNTY MARYLAND	Belle Vue Farm	415 Oakington Road	Havre de Gra	21078	Farm	No	0.45	Yes
06-002684	HARFORD COUNTY MARYLAND	Near Swan Creek	Route 635	Havre de Gra	21078	Open Space	No	0.45	Yes
06-002692	HARFORD COUNTY MARYLAND	Near Swan Creek	E of US Rt 40	Havre de Gra	21078	Open Space	No	0.45	No
06-002706	HARFORD COUNTY MARYLAND	Near Swan Creek	107 Branch Road	Havre de Gra	21078	Open Space	No	0.45	No
06-002714	HARFORD COUNTY MARYLAND	Near Swan Creek	105 Point Concord Rd	Havre de Gra	21078	Open Space	No	0.45	No
06-002722	HARFORD COUNTY MARYLAND	Near Swan Creek	107 Point Concord Rd	Havre de Gra	21078	Open Space	No	0.45	No
06-002730	HARFORD COUNTY MARYLAND	Near Swan Creek	106 Branch Road	Havre de Gra	21078	Open Space	No	0.45	No
06-002749	HARFORD COUNTY MARYLAND	Near Swan Creek	104 Branch Road	Havre de Gra	21078	Open Space	No	0.45	Yes
06-002757	HARFORD COUNTY MARYLAND	Near Swan Creek	102 Branch Road	Havre de Gra	21078	Open Space	No	0.45	Yes
06-002765	HARFORD COUNTY MARYLAND	Near Swan Creek	103 Branch Road	Havre de Gra	21078	Open Space	No	0.45	No
06-002773	HARFORD COUNTY MARYLAND	Near Swan Creek	105 Branch Road	Havre de Gra	21078	Open Space	No	0.45	No
06-002781	HARFORD COUNTY MARYLAND	Near Swan Creek	2105 Sandy Point Lane	Havre de Gra	21078	Open Space	No	0.45	No
06-002803	HARFORD COUNTY MARYLAND	Near Swan Creek	2103 Sandy Point Lane	Havre de Gra	21078	Open Space	No	0.45	No
06-002811	HARFORD COUNTY MARYLAND	Near Swan Creek	2101 Sandy Point Lane	Havre de Gra	21078	Open Space	No	0.45	No
06-002838	HARFORD COUNTY MARYLAND	Near Swan Creek	106 Point Concord Road	Havre de Gra	21078	Open Space	No	0.45	No
06-002846	HARFORD COUNTY MARYLAND	Near Swan Creek	104 Point Concord Road	Havre de Gra	21078	Open Space	No	0.45	No
06-002854	HARFORD COUNTY MARYLAND	Near Swan Creek	102 Point Concord Road	Havre de Gra	21078	Open Space	No	0.45	No
06-002862	HARFORD COUNTY MARYLAND	Near Swan Creek	109 Point Concord Road	Havre de Gra	21078	Open Space	No	0.45	No
06-002870	HARFORD COUNTY MARYLAND	Near Swan Creek	111 Point Concord Road	Havre de Gra	21078	Open Space	No	0.45	No
06-002889	HARFORD COUNTY MARYLAND	Near Swan Creek	2104 Sandy Point Lane	Havre de Gra	21078	Open Space	No	0.45	No

Guidance Manual for
NPDES Phase I MS4 Permit
Good Housekeeping Plan Applicability Certification

Prepared for:

Metropolitan Washington Council of Governments
777 North Capitol Street NE, Suite 300
Washington, DC 20002

Prepared By:

KCI Technologies, Inc.
936 Ridgebrook Road
Sparks, MD 21152
(410) 527-4407

March 2024

TABLE OF CONTENTS

1.0 INTRODUCTION 1
2.0 APPLICABILITY 1
3.0 WHO SHOULD COMPLETE THIS CERTIFICATION? 1
4.0 REVIEWS, UPDATES, AND AMENDMENTS 1
5.0 GHP APPLICABILITY CERTIFICATION GUIDANCE 2
5.1 Section A – Facility Owner Information (County/Jurisdiction) 2
5.2 Section B – Facility Operator Information (Agency/Department) 2
5.3 Section C – Facility Information 2
5.4 Section D – Preparer Information 4
5.5 Section E – Applicability Checklist 4
5.5.1 Waste Management 5
5.5.2 Vehicle and Equipment Storage 5
5.5.3 Vehicle and Equipment Refueling 6
5.5.4 Vehicle Maintenance 6
5.5.5 Vehicle and Equipment Washing 6
5.5.6 Material Storage 6
5.5.7 Aboveground Storage Tanks 7
5.5.8 Resident Drop-Off Centers 7
5.5.9 Stockpiles 8
5.5.10 Deicing Materials 8

List of Acronyms

AST - Aboveground Storage Tank
EJ - Environmental Justice
GHP - Good Housekeeping Plan
MDE - Maryland Department of the Environment
MS4 - Municipal Separate Storm Sewer System
SIC - Standard Industrial Classification

1.0 INTRODUCTION

To comply with Part IV.D.4.b of the County's Phase I Municipal Separate Storm Sewer System (MS4) Permit, the County must develop, implement, and maintain a Good Housekeeping Plan (GHP) for County-owned properties not required to be covered under Maryland's General Permit For Discharges from Stormwater Associated with Industrial Activities (General Permit 20-SW).

To support this effort, a *"Good Housekeeping Plan Applicability Certification"* has been developed to evaluate and document if a specific County-owned facility is subject to the GHP requirements. This guidance document has been created to aid County representatives in the completion of the GHP Applicability Certification.

If any of the covered activities identified in the GHP Applicability Certification are performed at the facility, then that facility will be required to implement a GHP. The GHP will include each of the potential stormwater polluting activities identified in the GHP Applicability Certification and corresponding pollution prevention procedures. The intent of the pollution prevention procedures included in the GHP will be to limit the release of materials with the potential to impact stormwater, this includes reducing or eliminating (to the extent practical):

- The occurrence of spills and leaks;
- The accidental dumping or release of materials;
- The accumulation of waste, trash, debris, unused parts/equipment, etc.;
- The exposure of hazardous materials to precipitation/run-off;
- Stormwater run-off contamination by stored materials; and/or
- Illicit discharges to the storm drain system.

2.0 APPLICABILITY

The GHP Program applies to permanent/fixed locations only. Temporary work sites such as construction sites or roadways undergoing repairs or maintenance are excluded from the GHP Program.

3.0 WHO SHOULD COMPLETE THIS CERTIFICATION?

This evaluation shall be completed by an individual familiar with the operations of the property being assessed. Typically, one form must be completed for each facility/site. However, if there are multiple agencies with separate operations at the same facility the County shall determine how best to manage the situation. If desired, a separate GHP Applicability Certification may be completed for each agency/area of operation at the facility, assuming that all areas of the facility are assessed and accounted for. A separate GHP may then be developed for each agency/area of operation at the facility, in accordance with the findings from the GHP Applicability Certification(s).

4.0 REVIEWS, UPDATES, AND AMENDMENTS

The GHP Applicability Certification must be reviewed and updated once every permit term or within one (1) year of substantial changes to a facility's operations which include any of the GHP-regulated activities included in the GHP Applicability Certification.

Any newly constructed/acquired facility must be assessed within one (1) year of initiating operations at the facility.

A facility's GHP must be amended and reissued to the facility within one (1) year of any changes to the facility's GHP Applicability Certification.

5.0 GHP APPLICABILITY CERTIFICATION GUIDANCE

This section will provide guidance and clarification for the referenced section of the GHP Applicability Certification.

5.1 Section A – Facility Owner Information (County/Jurisdiction)

This section intends to record information related to the owner of the facility (i.e. the County) and the County/Jurisdiction contact responsible for administering the GHP Program, typically the MS4 Coordinator or similar position. This information will likely be the same for each facility. In many cases, this information will be auto-populated.

- Items 1 and 2 – identify the name and address of the County/Jurisdiction that owns the property. If unknown, this information is available through the Maryland Department of Assessments and Taxation real property data search website: https://sdat.dat.maryland.gov/RealProperty/Pages/default.aspx

- Item 3 – Identify the County/Jurisdiction contact responsible for administering the GHP Program, typically the MS4 Coordinator or similar position.

- Item 4– Provide the mailing address of the individual identified in Item 3.

- Item 5 – Provide the contact information for the individual identified in Item 3.

5.2 Section B – Facility Operator Information (Agency/Department)

This section shall be used to record contact information for the agency/department that is responsible for operating the facility (e.g. Department of Public Works, Fire Department, Department of Corrections, Parks and Recreation Department, etc.).

5.3 Section C – Facility Information

This section is intended to provide information related to the specific facility being assessed.

- *Facility Type* – describe the purpose/use of this facility (e.g. Public Park, Hospital, School, Resident Drop-Off Center, etc.).

- *Facility Contact Name and Information* – Provide the name and contact information of the individual responsible for operations at the facility (Manager, Superintendent, etc.). Only provide updated contact information if it is different from that provided in Section B.

- *Facility Coordinates* – this information will be auto-populated based on the facility address provided.

- *Facility Size* – This can be obtained from the Maryland Department of Assessments and Taxation Real Property Data Search: https://sdat.dat.maryland.gov/RealProperty/Pages/default.aspx

- *Environmental Justice Score* – This can be obtained utilizing either of the options below, provided by the Maryland Department of the Environment (MDE) on the General Permit 20-SW website.

  - Map of Locations with EJ Score >0.76 - Image File (.jpg)
  - Map of Locations with EJ Score >0.76 - Google Earth File (.kmz)

  Note: The only Maryland Counties with census tracts that have an EJ Score greater than 0.76 are Baltimore, Montgomery, Prince George's, and Washington Counties.

- *Facility in 100-year Floodplain* – This can be obtained from the U.S. Federal Emergency Management Administration mapping tool available at: https://msc.fema.gov/portal/search

- *Industrial Permit Applicability* – Determine if the facility is (or should be) covered under Maryland's General Permit For Discharges from Stormwater Associated with Industrial Activities (General Permit 12-SWA / 20-SW). If a facility is or should be covered under the 20-SW permit, the facility is exempt from the GHP Program. Complete Section D of the GHP Applicability Certification and then stop. You do not have to complete Section E.

  Facilities covered under the 20-SW permit and/or the previous 12-SWA permit can be identified using MDE's Wastewater Permits Interactive Search Portal available at: https://mes-mde.mde.state.md.us/WastewaterPermitPortal/

  To determine if a facility should be covered under the 20-SW permit, refer to Part I.B of the 20-SW permit, which states, that to be eligible for authorization under the 20-SW permit a facility must either:

  (1) have been authorized to discharge under the previous 12-SWA permit;
  (2) have a stormwater discharge associated with industrial activity, or
  (3) be notified by the Department that the facility is eligible for coverage under Sector AD: Non-Classified Facilities.

  To assess item 2 above, first identify the Standard Industrial Classification (SIC) Code(s) most applicable to the facility's operation. The following OSHA websites provide the SIC search tools:

  - https://www.osha.gov/data/sic-manual
  - https://www.osha.gov/data/sic-search

  Once the facility's SIC Code has been identified, compare it to Appendix A of the 20-SW Permit (see link below). If the facility's SIC Code is included within Appendix A, then the facility must seek coverage under the 20-SW permit (unless a "No Exposure" certification can be obtained).

https://mde.maryland.gov/programs/permits/WaterManagementPermits/Documents/GDP%20Stormwater/20SW/20SW-Final-AppendixA.pdf

Additional information regarding "No Exposure" Certifications can be found here:

https://mde.maryland.gov/programs/permits/WaterManagementPermits/Documents/GDP%20Stormwater/Guidance%20Manual%20for%20No%20Exposure.pdf

- *No Exposure Certification* – Determine if a "No Exposure" Certification has been granted for this facility. If a "No Exposure" Certification has been granted then the facility is exempt from the GHP Program. Complete Section D of the GHP Applicability Certification and then stop. You do not have to complete Section E.

  Facilities covered under a "No Exposure" Certification can be identified using MDE's Wastewater Permits Interactive Search Portal available here:

  https://mes-mde.mde.state.md.us/WastewaterPermitPortal/

5.4 Section D – Preparer Information

Utilize this section to provide contact information for the individual who completed the GHP Applicability Certification.

5.5 Section E – Applicability Checklist

The preparer shall assess the facility and determine if any of the activities within Section E are occurring at the facility, now or in the foreseeable future. The preparer shall check either "Yes" or "No" in the appropriate box. If you answer "Yes" to any of the questions, the facility will require a GHP, addressing all applicable activities.

When a question asks if an activity is conducted outdoors, the intent is to determine if the activity has the potential to be exposed to stormwater or precipitation. Generally, activities conducted within a "storm resistant shelter" would not be considered "exposed" to rain, snow, snowmelt, and/or runoff. A "storm-resistant shelter" shall include completely roofed and walled buildings or structures, as well as structures with only a top cover but no side coverings, provided material under the structure is not otherwise subject to any run-on and subsequent runoff of stormwater.

When completing this assessment, the preparer shall disregard any existing pollution prevention controls or best management practices (BMPs) that are in place for a GHP-regulated activity. The purpose of this assessment is to identify if an activity is conducted at the facility that represents a potential threat to stormwater quality (i.e. presence of an activity). Properly managing a GHP-regulated activity does not exclude it from coverage under the GHP Program.

The following sections provide additional detail/explanation, where deemed necessary, regarding the specific questions asked within the GHP Applicability Certification.

5.5.1 Waste Management

The generation and storage of general refuse and office-type waste within typical lidded dumpsters would not trigger inclusion in the GHP Program. Generally, this type of waste would pose little threat to stormwater quality. However, the generation of industrial waste, the storage of waste in open-top containers, scrap metal containers, trash compactors, and hazardous waste storage, if located outdoors, would be a potential concern and trigger inclusion in the GHP Program.

Note that the handling, transfer, and disposal of non-hazardous waste that is generated and stored indoors and only moved outdoors during pickup/disposal is not considered an activity that would trigger the need for a GHP.

- Item 1 – this question is looking to establish if industrial wastes are routinely generated at the facility. If industrial waste only accounts for a very small fraction (~1%) of the total waste generated, this would be considered a minute amount. This exception is provided to exclude for example an office building that disposes of the occasional bottle of cleaning chemical.

- Item 5 – "Hazardous Waste" is defined as a waste with properties that make it dangerous or capable of having a harmful effect on human health or the environment. Hazardous waste possesses at least one of four characteristics (ignitability, corrosivity, reactivity, or toxicity), or is specifically listed by EPA or MDE as hazardous waste.

  "Universal Waste" is defined as any hazardous wastes managed under the universal waste requirements of COMAR 26.13.10.06 - 26.13.10.18, including batteries, lamps (bulbs), PCB-containing lamp ballasts, mercury-containing equipment, and recalled pesticides.

5.5.2 Vehicle and Equipment Storage

Assuming that the County has procedures in place for routine preventive maintenance on general purpose vehicles, then the presence of adequately maintained general purpose vehicles, which are not leaking or otherwise a potential source of stormwater contamination, is exempt from the GHP Program. This is based, in part, on MDE's rationale found in MDE's "No Exposure" Guidance Manual.

- Item 1 - Heavy equipment would include but not be limited to dump trucks, excavators, backhoes, loaders, gradealls, bulldozers, tractors, skid steers, cranes, pavers, pile drivers, asphalt rollers, etc.

- Item 6 – The photo below is an example of a Fuel Transfer tank in the bed of a pickup truck.



- Item 7 – Work trucks/pickup truck beds can be used to store potential stormwater pollutants (e.g. soil, sand, containers of hazardous materials, deicing materials, contaminated tools and equipment, etc.). If a work truck/pickup truck may contain these items and is routinely stored at the facility, mark "yes" to this question.

- Item 8 – This question intends to identify any portable equipment that may be stored at the facility. Specifically, any portable equipment that is run on or maintained with petroleum-based products. Examples include portable light stands, portable generators, and portable pumps.

5.5.3 Vehicle and Equipment Refueling

Spills at vehicle fueling operations have the potential to directly contribute oil, grease, gasoline, and diesel fuel to stormwater, and can be a significant source of lead, copper, zinc, and petroleum hydrocarbons. As such, vehicle or equipment refueling activities occurring at a facility would trigger coverage under the GHP. This includes but is not limited to on-site fuel dispensing islands served by underground or aboveground storage tanks and mobile refueling (e.g. refueling of equipment from a portable tank, fuel transfer tank, or fuel truck).

As stated in Section 2.0, the GHP Program applies to permanent/fixed locations only. Temporary work sites such as construction sites or roadways undergoing repairs or maintenance are excluded from the GHP Program. As such, refueling activities at a construction site or temporary worksite would not trigger coverage under the GHP.

5.5.4 Vehicle Maintenance

Vehicle and equipment maintenance activities conducted at a facility represent a potential threat to stormwater, regardless of where such activities occur. As such, the preparer shall assess if there is any likelihood of vehicle/equipment maintenance activities being performed at the facility, whether planned or unplanned and if so, mark this question "yes".

5.5.5 Vehicle and Equipment Washing

This section intends to identify if any vehicle/equipment washing occurs at the facility. This could include but is not limited to vehicle wash houses, steam cleaning bays, pressure washing of vehicles or equipment to remove dirt or salt, heavy equipment wash downs, etc. If vehicle/equipment washing occurs at the facility, regardless of location, mark this question "yes",

However, if vehicle washing is conducted in accordance with the terms and conditions of an existing State discharge permit, mark this question "No".

5.5.6 Material Storage

As noted in Section 5.5, activities conducted within a "storm resistant shelter" would not be considered "exposed" to rain, snow, snowmelt, and/or runoff. A "storm-resistant shelter" includes completely roofed and walled buildings or structures, as well as structures with only a top cover but no side coverings, provided material under the structure is not otherwise subject to any run-on and subsequent runoff of stormwater.

Materials stored in a completely enclosed structure (e.g. a building) are less likely to impact stormwater, assuming those materials are kept at an appropriate distance from doorways and other building openings and would not be subject to this section. However, materials stored in outdoor storage areas that are covered by a roof or awning but allow precipitation to enter and/or allow runoff to exit are considered to be "exposed" to stormwater and would be subject to this section.

5.5.7 Aboveground Storage Tanks

- Item 1 – A "Gen-set" is an emergency generator that has been installed on top of an integral fuel storage tank. "Gen-Sets" are generally contained units with weather-proof enclosures *(see the image below)*. MDE has excluded "Gen-Sets" from their definition of an aboveground storage tank. For this reason, "Gen-sets" were excluded from the GHP program.



- Item 2 – Chemicals or other hazardous substances could include but not be limited to substances such as antifreeze, windshield washer fluid, vehicle wash chemicals, diesel exhaust fluid, etc.

5.5.8 Resident Drop-Off Centers

As the title implies, this section is intended to identify resident drop-off centers, also known as convenience centers, beauty spots, etc. In general, these are self-service, outdoor areas, designed for the collection and temporary storage of household wastes such as used oil, used antifreeze, solid waste, recyclables, and other refuse by the public.

The preparer shall mark "yes" if any of the listed activities are performed at the facility being assessed, regardless of the entity responsible for managing the collection tanks and/or waste materials. For example, the Maryland Environmental Service (MES) is responsible for managing many used oil collection tanks across the State, while MES may be responsible for managing the tanks and collected waste, if the collection site is on County property it shall be included in the GHP.

- Item 3 – This item is meant to identify a facility (e.g. convenience center/drop-off center) where residents can bring lawn debris, leaves, limbs, and other organic debris for collection and disposal by the County. This does not include a Right-of-Way where residents leave lawn bags for collection.

5.5.9 Stockpiles

- Item 1 - Erodible materials are those that can easily erode due to wind or precipitation. This includes but is not limited to soil, sand, millings, slag, cinders, sawdust, landscaping bark, compost, etc.

- Item 2 - "Bulk" shall mean cold mix asphalt stored in loose form (e.g. stockpiles, heaps, etc.) and excludes material that is stored in bags.

5.5.10 Deicing Materials

- Item 1 - This includes deicing materials stored in salt domes, other buildings/structures, or in the open. "Bulk" shall mean materials stored in loose form (e.g. stockpiles, heaps, etc.) and excludes materials that are stored in bags or other shipping containers.

- Item 2 – This question is intended to identify a facility with pallets or other significant quantities of bagged salt stored outdoors. The sporadic bag or other container of salt staged around a facility during winter months to use for deicing the property would be excluded.

** END OF DOCUMENT**

GOOD HOUSEKEEPING PLAN (GHP)

APPLICABILITY CERTIFICATION

Facility Name: _____

Facility Address: _____

_____

Date of Evaluation: _____

To comply with Part IV.D.4.b of the County's Phase I Municipal Separate Storm Sewer System (MS4) Permit, the County must develop, implement, and maintain a Good Housekeeping Plan (GHP) for County-owned properties not required to be covered under Maryland's General Permit For Discharges from Stormwater Associated with Industrial Activities (General Permit 20-SW). The purpose of this certification is to evaluate and document if a specific County-owned facility is subject to the GHP requirements.

This evaluation shall be completed by an individual familiar with the operations of the property being assessed. One form must be completed for each facility or site for which you are seeking to certify GHP applicability. Additional guidance on completing this form is provided in the "Guidance Manual to GHP Applicability. This form shall be completed in its entirety.

This program applies to permanent/fixed locations only. Temporary work sites such as construction sites or roadways undergoing repairs or maintenance are excluded from this program.

This Certification must be reviewed and updated once every permit term, or within one (1) year of substantial changes to a facility's operations which could reasonably contribute to stormwater pollution. Any newly constructed/acquired facility must be assessed within one (1) year of initiating operations at the facility.

A facility's GHP must be amended and reissued to the facility within one (1) year of any changes to the facility's GHP Applicability Certification.

SECTION A – FACILITY OWNER INFORMATION (COUNTY/JURISDICTION)

1. **Jurisdiction Name:** _____
2. **Jurisdiction Address:** _____
   _____
3. **GHP Program Contact Name:** _____
4. **GHP Program Contact Address:** _____
   _____
5. **GHP Program Contact Information:** _____ *(phone)*
   _____ *(email)*

SECTION B – FACILITY OPERATOR INFORMATION (AGENCY/DEPARTMENT)

1. **Agency/Dept. Name:** _____
2. **Agency/Dept. Address:** _____
   _____
3. **Agency/Dept. Contact Name:** _____
4. **Agency/Dept. Contact Address:** _____
   _____
5. **Agency/Dept. Contact Information:** _____ *(phone)*
   _____ *(email)*

SECTION C – FACILITY INFORMATION

1. **Facility Site Name:** _____
2. **Facility Site Address:** _____

   _____
3. **Facility Type:** _____
4. **Facility Contact Name:*** _____
5. **Facility Contact Information:*** _____ *(phone)*

   _____ *(email)*
6. **Facility Coordinates *(decimal)*:** _____
7. **Facility Size *(acres)*:** _____
8. **Environmental Justice Score:** ☐ ≤76 ☐ >76
9. **Facility in 100-yr. Floodplain:** ☐ Yes ☐ No
10. Is this facility covered under Maryland's General Permit For Discharges from Stormwater Associated with Industrial Activities (General Permit 12-SWA / 20-SW)? ☐ Yes ☐ No
11. Has a "No Exposure" Certification been approved for this facility? ☐ Yes ☐ No

If you answer "Yes" to either question 10 or 11, complete Section D, and then stop. You do not have to complete Section E, as a GHP is only needed for a facility that is not covered under the 20-SW permit or an associated "No Exposure" certification.

* *If different from the contact information provided in Section B.*

SECTION D – PREPARER INFORMATION

Name: _____

Department/Company: _____

Date: _____

Email Address: _____

Phone Number: _____

SECTION E – APPLICABILITY CHECKLIST

Are any of the following activities occurring at the facility, now or in the foreseeable future? Please check either “Yes" or “No” in the appropriate box. If you answer "Yes" to any of these questions, the facility will require a Good Housekeeping Plan, addressing all applicable activities.

Note: When a question asks if an activity is conducted outdoors, the intent is to determine if the activity has the potential to be exposed to stormwater or precipitation. Generally, activities conducted within a “storm resistant shelter” would not be considered “exposed” to rain, snow, snowmelt, and/or runoff. A “storm-resistant shelter” shall include completely roofed and walled buildings or structures, as well as structures with only a top cover but no side coverings, provided material under the structure is not otherwise subject to any run-on and subsequent runoff of stormwater.

WASTE MANAGEMENT	NO	YES
1. Does this facility routinely generate industrial waste (i.e. waste produced by industrial or manufacturing activities), excluding minute amounts? *Examples include but are not limited to oil, solvents, chemicals, automotive fluids, pesticides, dirt, gravel, masonry, concrete, scrap metal, scrap lumber, etc.*	☐	☐
2. Are facility wastes stored in open-top roll-off dumpsters or other open-top containers, which are located outdoors?	☐	☐
3. Does this facility store scrap metal outdoors?	☐	☐
4. Is there a trash compactor in use at this facility?	☐	☐
5. Does this facility store Universal or Hazardous waste outdoors?	☐	☐
6. Is debris generated from street sweeping, storm drain cleaning, or other similar activities stored on-site, prior to disposal?	☐	☐
7. Is used cooking oil/grease, including grease disposal containers, stored at this facility, in an outdoor location?	☐	☐

VEHICLE AND EQUIPMENT STORAGE	NO	YES
1. Is heavy equipment or attachments (e.g. snow plow blades, breakers, etc.) routinely stored at this facility?	☐	☐
2. Are buses routinely stored at this facility?	☐	☐
3. Are garbage trucks, routinely stored at this facility?	☐	☐
4. Are fire engines, ladder trucks, police vehicles, ambulances, or other first responder vehicles, routinely stored at this facility?	☐	☐
5. Are fuel trucks, routinely stored at this facility?	☐	☐
6. Are vehicles, generally pick-up trucks, equipped with external fuel transfer tanks, routinely stored at this facility?	☐	☐
7. Are pick-up trucks/work trucks, with open beds that may contain potential stormwater pollutants, routinely stored at the facility?	☐	☐
8. Is portable, petroleum-powered equipment (e.g. pumps, portable light stands, portable generators, etc.) routinely stored at this facility?	☐	☐
9. Are damaged, wrecked, or scrap vehicles/equipment; or vehicles/equipment awaiting maintenance or transfer stored at this facility?	☐	☐

VEHICLE/EQUIPMENT REFUELING	NO	YES
1. Are vehicle/equipment refueling activities performed on-site?	☐	☐

VEHICLE MAINTENANCE	NO	YES
1. Are vehicle or equipment maintenance activities conducted at this facility?	☐	☐

VEHICLE/EQUIPMENT WASHING	NO	YES
1. Is vehicle/equipment washing conducted at this facility? *This could include vehicle wash houses, steam cleaning bays, pressure washing of vehicles or equipment to remove dirt or salt, heavy equipment wash downs, etc.* This excludes vehicle washing that is conducted in accordance with the terms and conditions of an existing State discharge permit.	☐	☐

MATERIAL STORAGE	NO	YES
1. Do you store containers of oil-based products at this facility in outdoor locations? *This excludes oil-based products stored within underground or aboveground storage tanks.*	☐	☐
2. Do you store hazardous substances (e.g. paints, solvents, chemicals, cleaners, automotive fluids, pesticides, herbicides, etc.) at this facility in outdoor locations? *This excludes hazardous substances stored within underground or aboveground storage tanks.*	☐	☐
3. Do you store fertilizers at this facility in outdoor locations?	☐	☐
4. Do you store bags of erodible materials (excluding deicing materials) at this facility, in an outdoor location? *This includes but is not limited to soil, sand, cold patch asphalt, concrete, cement, grout, mulch, etc.*	☐	☐

ABOVEGROUND STORAGE TANKS (ASTs)	NO	YES
1. Does this facility store oil-based product in an aboveground storage tank (AST) that is located outdoors? *(This excludes a generator set or "GenSet", which is a factory-supplied unit consisting of an emergency generator mounted on top of a fuel supply tank).*	☐	☐
2. Does this facility store chemicals or other hazardous substances in an AST that is located outdoors?	☐	☐
3. Does this facility store de-icing fluids in an AST that is located outdoors?	☐	☐

RESIDENT DROP-OFF CENTER	NO	YES
1. Does this facility provide an area where the public can dispose of used oil, waste antifreeze, or other waste oil-based products/hazardous substances?	☐	☐
2. Does this facility provide an area where the public can dispose of solid waste or recyclable materials?	☐	☐
3. Does this facility provide an area (collection center) where the public can drop off organic debris/waste for disposal?	☐	☐

STOCKPILES	NO	YES
1. Are stockpiles of erodible materials stored at this facility, in an outdoor location? *(This includes but is not limited to soil, sand, millings, slag, cinders, sawdust, landscaping bark, compost, etc.)*	☐	☐
2. Is cold mix asphalt stored in bulk at this facility, in an outdoor location?	☐	☐

DEICING MATERIALS	NO	YES
1. Is salt, abrasive-salt mix, or other aggregate deicing materials stored in bulk (e.g. loose form) at this facility?	☐	☐
2. Are stockpiles of bagged salt/deicing materials stored at this facility in outdoor locations?	☐	☐
3. Are vehicle-mounted salt spreaders/hoppers stored at this facility?	☐	☐
4. Are vehicles storing salt or salt-containing mixtures within open beds stored at this facility?	☐	☐

Is a GHP required for this facility: ☐ Yes ☐ No

If you answered "Yes" to any of the preceding questions, the facility would require a Good Housekeeping Plan, addressing all applicable activities.

If a GHP is required, which activities are to be included in the GHP?

Identify any activity in which a question above was answered "Yes".

- ☐ Waste Management
- ☐ Vehicle and Equipment Storage
- ☐ Vehicle/Equipment Refueling
- ☐ Vehicle Maintenance
- ☐ Vehicle/Equipment Washing
- ☐ Material Storage
- ☐ Aboveground Storage Tanks
- ☐ Resident Drop-Off Center
- ☐ Stockpiles
- ☐ Deicing Materials

Good Housekeeping Plan
Supplemental Training Information

As part of the GHP requirements within the Phase I NPDES permit, Counties must provide annual training for all appropriate staff and contractors regarding best management practices for preventing, reducing, and eliminating the discharge of pollutants during property activities. KCI was tasked with identifying and evaluating various training options to fulfill this requirement.

To begin, KCI reviewed existing stormwater training provided by four (4) Counties. This training was reviewed to determine its potential to be utilized "as-is" or easily modified to fulfill the GHP training requirements. In general, the training reviewed by KCI consisted of videos and/or PowerPoint presentations developed to meet Industrial Permit requirements for annual training. As such, this training included information related to the industrial permit, stormwater pollution prevention plans (SWPPPs), various inspections required under the industrial permit, and a review of best management practices (BMPs) related to stormwater management. Moreover, it appears that in most instances, this training is provided via instructor-led classes, which may not be the preferred option for GHP training, for reasons discussed in further detail below.

While it is possible to utilize the existing training materials, it is recommended that they be revised to remove any reference to the industrial permit and its requirements including implementation of SWPPPs and the various associated inspections. The training should instead focus briefly on why a GHP is required at the facility, why proper stormwater management is important, and a review of BMPs associated with GHP-covered activities. Additional details regarding recommended training content are provided below.

Since the existing training curriculum used by Counties would require substantial revisions to meet GHP training needs, KCI identified and evaluated additional options. The results of this review are provided below.

Description of the Recommended Training Method

The required training can take several forms, including classroom training, on-the-job training, toolbox talks, videos, or other virtual content. As this training is required annually and will likely include a large number of attendees, from multiple agencies, it is recommended that classroom training be avoided, if possible, due to the costs (both in dollars and employee time) associated with providing such training.

It is therefore recommended that video or other virtual training be utilized. This could include County-developed videos or voice-over PowerPoint Presentations, or a training video obtained from a third-party provider. It is recommended that the selected training material be distributed via a County intranet link or posted on publicly available streaming services such as YouTube. Employees/Contractors completing the training could be required to sign an "Attendance Form" provided in the GHP to document having watched the video. GHP-covered facilities could choose to have a group viewing of the training or allow employees to watch the material individually.

Description of the Training Content

The primary focus of this training should be to provide the trainee with a basic understanding of the proper procedures and controls for reducing stormwater pollution associated with facility activities. Additional information including background into the benefits of surface waters and the sources/issues of stormwater pollution should also be addressed to help build context. The following list includes recommendations for material that should be addressed by the GHP training.

- Basic Introduction to Stormwater Management
  - The value/benefits derived from surface water (recreation, drinking water, etc.)
  - Describe and define stormwater/stormwater run-off (i.e. what is stormwater?)
  - Identify common stormwater pollutants and their sources
  - Describe the negative effects of stormwater pollution
- Background into Good Housekeeping Plan
  - Briefly discuss permit requirement
  - Note that a GHP has been developed for the facility and that it is available for review
- Review of proper stormwater management controls/procedures
  - Waste Management
  - Vehicle/Equipment Storage and Maintenance
  - Vehicle/Equipment Cleaning
  - Vehicle Fueling
  - Material Storage
  - Aboveground Storage Tanks*
  - Stockpile Management*
  - Deicing Material Management*
  - Resident Drop-off Centers*

**Items not likely to be addressed in third-party supplied training materials.*

It is recommended that administrative items such as maintaining the GHP, inspection requirements, GHP updates, etc. be addressed with the Facility's Responsible Person (i.e. the individual responsible for implementing the GHP) separately, and not included in the annual training. These administrative requirements are only applicable to a small subset of the population receiving this training. As such, the inclusion of this material will only lengthen the training and dilute the content of the training which should focus on the proper controls to prevent stormwater pollution.

The Length of Training

While activities at GHP-covered facilities represent a potential threat to stormwater quality, that threat is considerably lower than that posed by facilities covered under the industrial permit. As such, GHP training can be much simpler and provided in a fraction of the time when compared to industrial permit training (as there is less information to cover).

Moreover, adult learning data suggests that the attention span of a typical adult begins to wane after 15 to 20 minutes. To ensure employee retention of the training material and to limit lost time, KCI recommends that training be limited to no more than 20 minutes, if possible.

Recommended Training Provider

KCI reviewed both publicly available stormwater training videos and training videos offered for sale by third-party providers. The video referenced below met a majority of the objectives discussed above and is available for purchase from a third-party vendor.

- **Stormwater Pollution Prevention for MS4s "Rain Check"**
  Excal Visual, Inc.
  1-888-925-6554
  support@excalvisual.com
  https://www.excaltraining.com/swrc-extended-preview
  Length: 19-31 minutes

The video may be previewed in its entirety at the above-referenced website. The following is a description of the training video from the Excal Visual, Inc. website:

Regulated municipalities and other municipal separate storm sewer system (MS4) operators must prevent pollutants from entering their storm drainage systems. One element of this requirement is preventing stormwater pollution by municipal facilities such as fleet maintenance shops, bus barns, sanitation facilities, parks, and street sweeping operations. This program shows employees how to practice good housekeeping, spill response, materials management, vehicle fueling and washing, and the other BMPs profiled in the "National Menu". Also included is a PowerPoint customizable template.

Chapters:

1. *Introduction*
2. *Good Housekeeping & Spill Prevention*
3. *Spill Control and Response*
4. *Vehicle Fueling*
5. *Vehicle and Equipment Maintenance*
6. *Vehicle and Equipment Washing*
7. *Materials Management*
8. *Waste Management*
9. *Parking Lot & Street Cleaning*
10. *Storm Drain System Cleaning*
11. *Municipal Facilities Maintenance*
12. *Landscaping and Grounds Maintenance*
13. *Near or Over Surface Waters*
14. *Conclusion*

While the full video length is 31 minutes, the last several chapters do not relate entirely to the activities covered under the GHP. As such, the video could be stopped after the Waste Management chapter, which is 20:18 minutes into the video. KCI spoke with a representative from Excal who confirmed that they can tailor the video to include only the desired chapters.

Estimated Costs Associated with Training Development

Assuming that the County pursued the recommended option of utilizing video training material, this approach would result in an initial up-front cost of developing/acquiring the training material but after development, the only costs would be that incurred by employee down-time when viewing the training.

The base cost for acquiring the recommended training video from Excal Visual, Inc. is $595.00. The video is available in DVD, CD, USB flash drive, or digital download format. If a digital download is selected, the total cost including tax and shipping is **$604.75.** If either a DVD, CD, or USB Flash drive media is preferred, the total cost including tax and shipping would be **$621.75.**

Recommendations for Supplemental Training Media

The BMP Fact Sheets provided for each activity in the Good Housekeeping Plan can be printed, laminated, and posted in areas where the activities are likely to occur. Posting this information in the areas where it is needed most will help educate employees and serve as a valuable reference tool.

Additional Web Links to General Stormwater Training Videos and Resources

During the course of this project, KCI identified additional videos related to stormwater management on YouTube and other internet sites. The following is a list of these sites, with embedded hyperlinks.

- Washington Valley Sanitary Authority / North Central Texas Council of Governments – Stormwater Training for Municipal Employees
    - Part 1 – Fleet Maintenance and Material Handling
    - Part 2 – Construction Activities and Land Disturbances
    - Part 3 – Parks and Grounds Maintenance
    - Part 4 – Solid Waste Management
    - Part 5 – Streets and Drainage Maintenance
    - Part 6 – Preventing Stormwater Pollution – What We Can Do
- Clackamas River Water Providers – Stormwater: A Drop in the Bucket
- SanDiego County – Stormwater Strategies: Housekeeping
- Clark County Washington – Stormwater Management: The Basics
- Minnesota Pollution Control Agency
    - Best Management Practice Options for Total Suspended Solids
    - Industrial Stormwater: How to Collect a Grab Sample
    - Industrial Stormwater: How to Collect a Sheet Flow Sample
- EPA - NPDES Training Seminars

Additional Options for Third-Party Training (for persons responsible for GHP Program Management)

1) American Stormwater Institute
https://americanstormwaterinstitute.com/classes-offered/ms4-stormwater-permit-compliance-professional/

- Qualified MS4 Stormwater Permit Compliance Professional (MS4-SCP)
- Intended for MS4 compliance personnel that may encounter MS4 stormwater issues including stormwater managers, engineering staff, MS4 stormwater inspectors, building and code inspectors, administrative personnel, environmental staff, water quality staff, planning staff, fleet staff, road workers, park officials, construction managers, construction inspectors, and MS4 maintenance staff.
- Covers the basis for permit requirements, followed by an introduction to the MS4 general permit and how to evaluate the impacts on permittees with construction general permits that discharge to the MS4. Discussion of inspections of MS4 facilities followed by BMPs.
- 2-day course (online)
- 3-year certification
- $699

2) American Stormwater Institute –
https://americanstormwaterinstitute.com/classes-offered/ms4-stormwater-inspector-online-course/

- Qualified MS4 Stormwater Inspector (QSI)
- Intended for MS4 inspectors of all kinds (stormwater, engineering, code enforcement, health, and water quality), construction site and industrial personnel that may encounter MS4 stormwater issues including stormwater inspectors, building inspectors, engineering review staff, administrative personnel, environmental staff, water quality staff, public works staff, municipal maintenance staff, and stormwater managers.
- Covers field-oriented inspections of MS4s including methods and techniques to ensure the MS4 stays in compliance.
- 1-day course (online)
- 3-year certification
- $399

3) National Stormwater Center - https://www.npdes.com/csi-municipal

- Certified Municipal Stormwater Inspector
- Intended for municipalities that are responsible for overseeing operations that are regulated by MS4 Phase I and Phase II entities to meet the conditions of the NPDES permit.
- Covers the six minimum control measures (MCMs) for Phase II MS4 operators.
- 2-day course (online)
- 5-year certification
- $824

4) Aarcher Institute – https://aarcherinstitute.com/courses/stormwater-compliance-environmental-training/

- Industrial Stormwater Compliance Manager
- Designed to train personnel in the preparation and development of SWPPPs, permit applications, and facility stormwater compliance programs. Intended for persons responsible for managing stormwater permitting at a facility or organizational level, developing SWPPPS, implementing SWPPPS, and managing permit compliance.
- Topics covered include all aspects of NPDES permitting and development, implementation, and management of a SWPPP.
- 2-day course (in person)
- SWPPP or Industrial MS4s
- $1,115

5) Stormwater One – https://stormwaterone.com/program/maryland/MS299

- Intended for stormwater personnel responsible for overseeing municipal operations that are regulated by MS4 Phase I and Phase II entities to meet the conditions of the NPDES permit.
- Covers the six minimum control measures (MCMs) for Phase II MS4 operators.
- 14-hour course (online)
- 2-year certification
- $499

END OF DOCUMENT

GOOD HOUSEKEEPING PLAN (GHP)

Abingdon Elementary School
3001 S Tollgate Road
Abingdon, MD 21009

June 30, 2025

TABLE OF CONTENTS

1.0 BACKGROUND & INTRODUCTION 1
1.1 Objectives 1
1.2 Potential Stormwater Pollutants 1
2.0 RESPONSIBILITIES 3
2.1 GHP Implementation 3
2.2 Plan Review and Modification 3
2.3 Inspections 3
2.3.1 GHP Site Inspections 3
2.3.2 Conveyance System Inspections 4
2.4 Training 4
3.0 BEST MANAGEMENT PRACTICES (BMPs) 5
3.1 Applicability of BMP Fact Sheets 5
3.2 BMP Fact Sheets 5

List of Tables

TABLE 1-1 POTENTIAL STORMWATER POLLUTANTS AND THEIR SOURCES 2

List of BMP Fact Sheets

GH-01 - Waste Management
GH-02 - Vehicle and Equipment Storage
GH-03 - Vehicle/Equipment Refueling
GH-04 - Vehicle Maintenance
GH-05 - Vehicle/Equipment Washing
GH-06 - Material Storage
GH-07 - Aboveground Storage Tanks
GH-08 - Resident Drop-Off Centers
GH-09 - Stockpiles
GH-10 - Deicing Materials

Appendices

Appendix A: GHP Site Inspection Checklist
Appendix B: GHP Stormwater Conveyance Inspection Checklist
Appendix C: General Spill Response Procedures
Appendix D: Training Records

List of Acronyms

AST	-	Aboveground Storage Tank
BMP	-	Best Management Practice
CFR	-	Code of Federal Regulations
GHP	-	Good Housekeeping Plan
MDE	-	Maryland Department of the Environment
MS4	-	Municipal Separate Storm Sewer System
NPDES	-	National Pollutant Discharge Elimination System
SPCC	-	Spill Prevention, Control, and Countermeasure Plan

1.0 BACKGROUND & INTRODUCTION

Polluted stormwater runoff has the potential to enter the County's storm sewer systems (referred to as a municipal separate storm sewer system or MS4), and then discharge, untreated, into local water bodies. To address this potential stormwater pollution, the County is required to obtain a NPDES permit from the Maryland Department of the Environment (MDE). The NPDES Permit requires the County to take actions to prevent stormwater pollution, maintain storm sewer systems, monitor stormwater discharges, and develop and implement comprehensive management programs to minimize the discharge of pollutants from the storm sewer system.

To comply with Part IV.D.4.b of the County's Phase I MS4 Permit, the County must develop, implement, and maintain a Good Housekeeping Plan (GHP) for certain County-owned properties not required to be covered under Maryland's General Permit for Discharges from Stormwater Associated with Industrial Activities *(General Permit 12-SWA / 20-SW).*

To support this effort, a *"Good Housekeeping Plan Applicability Certification"* has been developed to evaluate and document if a specific County-owned facility is subject to the GHP requirements. The *"GHP Applicability Certification"* includes the following ten (10) potential stormwater polluting activities. If any of the covered activities are performed at the facility, then that facility is required to implement a site-specific GHP. The GHP will include each of the potential stormwater polluting activities identified in the *"GHP Applicability Certification"* and corresponding pollution prevention procedures.

- Waste Management
- Vehicle and Equipment Storage
- Vehicle/Equipment Refueling
- Vehicle Maintenance
- Vehicle/Equipment Washing
- Material Storage
- Aboveground Storage Tanks
- Resident Drop-Off Center
- Stockpiles
- Deicing Materials

1.1 Objectives

The GHP was developed to outline suitable practices, procedures, and protocols, or Best Management Practices ("BMPs") for reducing and/or preventing stormwater pollution associated with operations at covered County-owned properties. The intent of the pollution prevention procedures included in the GHP is to limit the release of materials with the potential to impact stormwater, this includes reducing or eliminating (to the extent practical):

- The occurrence of spills and leaks;
- The accidental dumping or release of materials;
- The accumulation of waste, trash, debris, unused parts/equipment, etc.;
- The exposure of hazardous materials to precipitation/run-off;
- Stormwater run-off contamination by improperly stored materials; and/or
- Illicit discharges to the storm drain system.

1.2 Potential Stormwater Pollutants

Table 1-1 on the following page provides a list of common potential pollutants that may result from the GHP-regulated activities identified above. Understanding the sources of these pollutants can help in achieving the goals and objectives of the GHP program.

TABLE 1-1 POTENTIAL STORMWATER POLLUTANTS AND THEIR SOURCES

		Waste Management	Vehicle/Equipment Storage	Vehicle/Equipment Refueling	Vehicle Maintenance	Vehicle/Equipment Washing	Material Storage	Aboveground Storage Tanks	Resident Drop-Off Center	Stockpiles	Deicing Materials
Pollutants	**Sources**	**Associated GHP Activity**									
Sediment	Land disturbance; erosion; paved surfaces; material stockpiles; waste storage; salt/abrasive application	X				X	X		X	X	X
Hydrocarbons *(petroleum compounds)*	Leaking vehicle and equipment; vehicle and equipment cleaning; spills; improper storage; maintenance activities; scrap metal disposal; improper disposal	X	X	X	X	X	X	X	X		
Metals	Vehicle brake and tire wear; vehicle/equipment exhaust; batteries; galvanized metal; paint and wood preservatives; fuels, pesticides, and cleaners; vehicle fueling, maintenance, and washing; industrial waste	X	X	X	X	X	X	X	X		
Toxic Chemicals	Pesticide application; improper chemical storage; leaks and spills from storage containers; leaking vehicles; maintenance activities	X	X		X	X	X	X	X		
Chlorides	De-Icing chemicals										X
Trash/Debris	Improper waste storage and disposal; leaking trash containers; littering; poor housekeeping	X	X				X		X		
Nutrients (nitrogen and Phosphorus)	Fertilizers; malfunctioning septic systems; sewer overflows; animal/pet waste; vehicle washing; decaying grass and leaves; leaking trash containers; atmospheric deposition	X				X	X		X		

2.0 RESPONSIBILITIES

2.1 GHP Implementation

A separate GHP is required for each covered facility. The following individual *(identified by name and/or title)* is accountable for the administration and implementation of the GHP at this facility and has the authority to commit the necessary resources to implement this Plan.

_____

Name and/or Title of Responsible Person

The Responsible Person listed above shall ensure that facility personnel involved in any GHP-covered activities identified in this Plan, are provided with access to, and are familiar with, the contents of this Plan.

2.2 Plan Review and Modification

The *"GHP Applicability Certification"* completed for this facility must be reviewed and updated once every permit term, or within one (1) year of substantial changes to a facility's operations that could reasonably contribute to stormwater pollution. Any newly constructed/acquired facility must be assessed within one (1) year of initiating operations at the facility. The facility's GHP must be amended and reissued to the facility within one (1) year of any changes to the facility's *"GHP Applicability Certification"*.

When warranted, the BMP Fact Sheets provided in Section 3.0 may need to be updated or revised. At the same time, additional BMP Facts Sheets may be added. The need for such updates or modifications will be at the discretion of the County's GHP Program Administrator.

2.3 Inspections

The County's MS4 permit requires each facility covered by a GHP to have the following:

1. Written procedures for annually assessing County properties to prevent the discharge of pollutants, spills, and leaks into the County's storm sewer system; and

2. Written procedure for performing stormwater conveyance system inspections and for removing debris that may cause clogging, backups, and flooding.

To meet these requirements, each facility that is covered by a GHP will be required to complete routine site inspections and stormwater conveyance system inspections as detailed below. Facility management will be responsible for ensuring the necessary inspections are completed within the required timeframes, that corrective actions (if needed) are performed, and that records of inspections and completed corrective actions are maintained for at least five (5) years.

2.3.1 GHP Site Inspections

The GHP Site Inspection will be performed to ensure that each GHP-covered facility is being properly maintained and that there are no visible signs of pollutants entering the stormwater system. GHP facilities shall utilize the *"GHP Site Inspection Checklist"*, provided in ***Appendix A*** to complete the required inspection. At a minimum, each facility is to be inspected every five (5) years.

2.3.2 Conveyance System Inspections

Stormwater conveyance systems are generally comprised of curbs and gutters, catch basins, inlet structures, swales, channels, piping, culverts, detention ponds, outfalls, or other structures that are used to collect, contain, and convey stormwater runoff.

The unimpeded movement of stormwater through conveyance systems is critical in avoiding backups and flooding, which can impede facility operations and damage property. Routine inspections and preventative care of stormwater conveyance systems can ensure these systems function as intended and prevent the need for costly and time-consuming repairs and retrofits.

Each GHP-covered facility is required to conduct routine stormwater conveyance system inspections to ensure the free flow of stormwater within the conveyance systems. GHP-covered facilities shall utilize the *"GHP Stormwater Conveyance System Inspection Checklist"*, provided in ***Appendix B*** to complete the required inspections. At a minimum, facility conveyance system inspections are to be conducted every five (5) years.

2.4 Training

As part of the GHP requirements within the County's Phase I NPDES permit, annual training must be provided to all appropriate staff and contractors. Such training shall be provided to any individuals responsible for implementing the GHP, performing the required inspections, or involved in any of the GHP-covered activities identified in this Plan. The required training shall focus on the duties and responsibilities assigned to site personnel in implementing the GHP and the best management practices (BMPs) prescribed in this Plan for preventing, reducing, and eliminating the discharge of pollutants during facility activities.

The County's MS4/GHP Program Coordinator will be responsible for developing the required training and disseminating it to GHP-covered facilities. Each GHP-covered facility will be responsible for identifying staff/contractors who must attend annual training, ensuring identified staff complete the required training, and maintaining records that document training dates and attendees. Training records and other documentation shall be maintained in ***Appendix D*** of this Plan.

3.0 BEST MANAGEMENT PRACTICES (BMPs)

This section contains a BMP Fact Sheet for each of the ten (10) GHP-regulated activities. The County's operations are not limited to the BMPs contained within this document; nor is the County required to implement all of the pollution prevention measures identified within each BMP Fact Sheet. The County should select and implement those measures that are applicable and have the greatest potential for reducing stormwater pollution.

The BMP Fact Sheets contained within this document offer recommended protocols for a particular activity. These pollution prevention measures are considered non-structural BMPs with a focus on source control of potential pollutants.

3.1 Applicability of BMP Fact Sheets

The *"GHP Applicability Certification"* completed for this facility has identified the activities conducted at this facility that require coverage under this Plan. Each of the BMP Fact Sheets shall be marked as to whether they are applicable or not applicable to this facility. The Applicable/Not Applicable indicator on each BMP Fact Sheet can be revised in response to changes in operations at the facility.

3.2 BMP Fact Sheets

BMP Fact Sheets can be found on the following pages. For the sake of consistency, the general outline of a BMP Fact Sheet will be as follows:

- Identification of GHP-covered activity.
- Applicability of the BMP Fact Sheet to the facility.
- A general description of the concern the activity poses to stormwater.
- Recommended pollution prevention measures for reducing/eliminating stormwater pollution.
- Additional sources of information, if applicable.

BMP Fact Sheet

WASTE MANAGEMENT

GH-01

Not Applicable ☒ Applicable ☐

CONCERN

Improperly managed waste can allow trash and debris to be washed into storm drains which poses a concern to water quality, marine life, and public health. It also has the potential to create obstructions in the drainage system, which can lead to backups and flooding. Additionally, improper storage and handling of waste materials can allow pollutants including oils and greases, toxic and chemical compounds (including nutrients), bacteria, metals, and other potentially hazardous wastes to enter waterways.

POLLUTION PREVENTION MEASURES

General *(applicable to all waste management activities)*

1) Provide suitable containers, preferably with working covers, to collect waste materials.
2) Ensure that appropriate waste containers are available in areas where waste is generated.
3) Provide a cover over waste storage areas, if feasible.
4) Avoid positioning waste receptacles near storm drains, water bodies, or areas of concentrated runoff.
5) Ensure that lids to waste containers *(if present)* are kept closed to prevent the intrusion of precipitation and prevent trash from blowing out of the receptacle.
6) For waste receptacles, which do not have lids and could leak, containers should be inspected regularly and controls (e.g., containment, spill response, etc.) shall be enacted whenever leaks or dry-weather discharges are observed.
7) Routinely inspect waste containers, roll-offs, compactors, and other waste receptacles for the presence of excessive waste accumulation and overflowing containers.
8) Ensure that wastes accumulating on the ground are placed in a suitable waste container.
9) Ensure that wastes are removed from the facility regularly by a licensed and contracted vendor.
10) Repair or replace damaged waste container lids.

Trash Compactors

1) Routinely inspect trash compactors for malfunctioning equipment or leaking hydraulic oil and provide the appropriate spill response if leaking equipment is encountered.
2) Regularly inspect compactors for leaking fluids and implement appropriate controls such as spill response/cleanup, collection or diversion of released fluids, providing secondary containment, etc. whenever leaks or dry-weather discharges are observed.

Scrap Metal Collection Containers

1) Avoid placing oily or grease-covered items in uncovered scrap metal recycling collection containers. If needed, wrap oily/greasy items in plastic garbage bags before placing them in the collection container.

Hazardous/Universal Wastes

1) Ensure that hazardous waste and universal wastes (e.g., batteries, bulbs, etc.) are collected and stored indoors or within covered collection containers.
2) Verify that hazardous/universal waste collection containers are in good condition, not leaking, and compatible with the wastes being stored.

Street Sweeping / Vactor Truck Material Storage

1) Do not site storage areas near storm drains, open water bodies, or areas of concentrated runoff.
2) Install sediment control devices (e.g. silt fence, silt socks, hay bales, etc.) around the staging area. Inspect these controls regularly and replace them as needed.
3) Cover the materials staging area, if feasible.
4) Provide oil-absorbent booms if necessary to control oily discharge. Inspect and replace booms regularly.
5) The staging area should be checked periodically for evidence of sediment migrating outside of the staging area. Material that has migrated out of the staging area should be promptly swept and returned to the staging area or disposed of.

Waste Cooking Oil/Grease

1) Maintain storage containers indoors or within a covered location, if feasible.
2) Storage containers shall be secured to prevent infiltration of precipitation and accidental/intentional spills or releases.
3) Carefully transfer waste oil/grease to the appropriate collection container to avoid spills.
4) Maintain suitable spill response equipment near collection containers. Immediately clean up any spilled oil/grease. Keep the exterior of the collection container clean and free of spilled oil/grease.
5) Provide secondary containment for collection containers, if feasible.

BMP Fact Sheet

VEHICLE AND EQUIPMENT STORAGE

GH-02

Not Applicable ☒ Applicable ☐

CONCERN

Vehicles and equipment may be stored onsite to support various County operations (e.g., construction, maintenance, snow removal, roadside assistance, mass transit, mowing, etc.). Examples of County owned and operated vehicles and equipment stored onsite at any given time include but are not limited to, the following: cars, trucks, buses, emergency response vehicles, garbage trucks, heavy equipment (backhoes, frontend loaders, etc.), forklifts, towable generators, portable light stands, and roadside equipment. Vehicle and equipment storage is considered a pollutant source due to the potential for incidental releases of petroleum products, lubricants, and various automotive fluids.

POLLUTION PREVENTION MEASURES

1) When possible/practical, store vehicles and equipment inside or under cover to prevent exposure to precipitation.
2) If vehicles or equipment must be stored outside, store vehicles/equipment in designated areas away from areas of concentrated runoff, storm drains, and other stormwater conveyances.
3) Vehicles and equipment shall be staged on impervious (asphalt or concrete) surfaces;
4) Keep truck beds clean and ensure potential stormwater pollutants are stored in closed containers, covered, or otherwise protected from stormwater exposure.
5) Conduct routine visual inspections of vehicles and equipment for the presence of leaks and respond accordingly.
6) Leaking vehicles/equipment should be moved inside or under cover. At a minimum, drip pans or absorbent pads shall be used to contain the leak until the vehicle/equipment can be relocated and the leak addressed.
7) Drain all fluids from wrecked or heavily damaged vehicles and equipment before storage.
8) Have an adequate supply of appropriate spill response equipment readily available and clean up all spills and leaks immediately utilizing dry cleaning techniques (e.g. absorbents and brooms).
9) Train staff in spill response so that incidents are addressed in a timely fashion.
10) Do not wash down areas where leaks have collected on ground surfaces; use dry cleaning methods such as granular absorbents and brooms.

VEHICLE AND EQUIPMENT REFUELING

Not Applicable ☒ Applicable ☐

CONCERN

Refueling activities associated with County vehicles and equipment can result in a discharge of fuel (gasoline and diesel fuel), which has the potential to enter the storm drain system and/or a nearby waterway. Such releases can introduce hydrocarbons, metals, and other toxic chemicals to stormwater runoff.

POLLUTION PREVENTION MEASURES

General Procedures *(applicable to all refueling activities)*

1) Routinely *(at least daily)* inspect the fuel dispensing area for any spills or leaks.
2) Routinely inspect fuel dispensing equipment looking for leaking or damaged equipment. Damaged or malfunctioning equipment shall be taken out of service until it has been repaired.
3) Fuels will only be dispensed into authorized vehicles, equipment, and approved containers.
4) Vehicle operators must remain outside of their vehicles and in attendance of fuel dispensers at all times while dispensing fuel.
5) Third-party contractors must be trained in proper refueling procedures and pollution prevention.
6) Do not utilize a foreign object to keep the dispenser nozzle in the open position. If present, a "hold-open" latch on the nozzle may be used.
7) Do not "top off" a vehicle's fuel tank once the dispenser nozzle's automatic shut-off has been activated. Topping off tanks may result in spills. Post signs in fueling areas warning vehicle operators against "topping off" of vehicle fuel tanks.
8) After refueling has stopped, allow several seconds to pass before removing the nozzle and returning it to the dispenser. This will prevent incidental dripping from the nozzle.
9) Employees refueling vehicles shall note the location of the "Emergency Fuel Shut Off" switch, to be used to stop the flow of fuel to the dispensers in the event of a release or emergency.
10) Have an adequate supply of appropriate spill response equipment readily available and clean up all spills immediately utilizing dry cleaning techniques (e.g. absorbents and brooms).
11) Immediately clean up and dispose of used absorbent material.
12) Do not wash down fueling areas; use dry cleaning methods such as granular absorbents and brooms.
13) Conduct refueling activities over impervious (e.g. concrete) surfaces. Place drip pans or absorbent pads under the nozzle if fueling occurs over a permeable surface such as grass or soil.
14) Install oil control devices in storm drains that may receive contaminated runoff from fueling areas.
15) Cover fueling areas with a canopy or roof to prevent direct contact with rainfall. Direct run-on away from fueling areas and collect fueling area run-off in a dead-end sump or oil-water separator.

Mobile Equipment Refueling

1) Refuel equipment on an impervious surface, downgradient of, and at the farthest practical distance from any storm drain, stormwater conveyance, stormwater management feature, or waterway.
2) Utilize secondary containment when refueling equipment (when practical).
3) Ensure mobile refuelers are parked in designated locations and away from areas of concentrated run-off, storm drains, and other stormwater conveyances.
4) Ensure that procedures are in place and that staff is properly trained in spill response/cleanup so that leaks and spills are addressed appropriately and promptly.

BMP Fact Sheet

VEHICLE MAINTENANCE

GH-04

Not Applicable ☒ Applicable ☐

CONCERN

Vehicle and equipment maintenance can impact the water quality of nearby waterways by exposing stormwater to various pollutants including petroleum hydrocarbons, solvents, antifreeze/coolants, used oil, lubricating oil, grease, brake fluid, metals, and various chemicals. Additionally, vehicles that are wrecked or awaiting repair can be a source of pollution if leaking fluids are not properly controlled.

POLLUTION PREVENTION MEASURES

1) Conduct vehicle and equipment maintenance activities indoors.
2) Make sure incoming vehicles and equipment are inspected for leaking fluids and oil.
3) Move leaking vehicles or equipment indoors or under cover as soon as possible. At a minimum, a drip pan or absorbent pads shall be utilized to contain the leak until the vehicle/equipment can be relocated and the leak addressed.
4) Avoid performing maintenance on vehicles in close proximity to exterior doorways, which may allow released fluids to migrate outdoors.
5) Have an adequate supply of appropriate spill response equipment readily available and clean up all spills and leaks immediately utilizing dry cleaning techniques (e.g. absorbents and brooms).
6) Keep maintenance areas neat and well organized. Remove dirt, debris, and used absorbent regularly.
7) Inspect maintenance areas as well as maintenance equipment on a routine basis.
8) Store vehicles, parts, and generated wastes indoors or off the ground and under cover whenever possible. When practical, provide secondary containment.
9) Promptly transfer used fluids to the proper waste container; do not leave full drip pans or other open containers around the shop. Empty and clean drip pans and containers regularly.
10) Waste liquids shall not be poured into floor drains, sinks, outdoor storm drain inlets, or other storm drains or sewer connections. Liquid wastes are to be collected in properly labeled containers and disposed of by a licensed waste hauler or other appropriate method.
11) Store leaking batteries in a sealed container and provide secondary containment, if feasible.
12) Clean all parts indoors utilizing a self-contained parts washer.
13) Do not hose down indoor service areas to storm drains or areas where it can seep into groundwater.
14) Maintain floor drains in good working order and inspect for proper function on a routine basis. Consider plugging floor drains that discharge to the storm sewer.
15) Ensure oil/water separators (if present) are maintained in proper working order and are checked on a routine basis for the presence of oil.
16) If maintenance work must be performed outdoors, adhere to the following requirements:
    - Conduct maintenance activities over an impervious surface, away from stormwater inlets.
    - Cover outdoor maintenance areas and direct stormwater run-on away from the area.
    - Use drip pans or drop cloths underneath the equipment to catch leaks and drips.
    - Have an adequate supply of appropriate spill response equipment readily available.
    - Clean all spills immediately using dry cleaning techniques (e.g. absorbents and brooms).
    - Avoid performing maintenance activities during precipitation events.
    - Limit temporary outdoor maintenance activities to a single shift/day if additional time is needed to cover the work area at the end of each day/shift.

VEHICLE AND EQUIPMENT WASHING

Not Applicable ☒ Applicable ☐

CONCERN

Vehicle and equipment washing can generate washwater that contains oil, grease, organic compounds, surfactants, phosphates, metals, and suspended solids. If vehicles/equipment are washed outdoors on impervious surfaces, dirty washwater can contaminate stormwater that ends up in waterways. Washing equipment over pervious surfaces can allow washwater to seep into the ground contaminating groundwater.

POLLUTION PREVENTION MEASURES

1) Vehicle and equipment washing should only be conducted in designated indoor wash bays that capture and recycle washwater to the extent practical.
2) Wastewater from the washing facility should be discharged to the sanitary sewer system under the authorization of a wastewater discharge permit issued by the local municipal authority.
3) The floor of indoor vehicle wash bays should be completely bermed or sloped to collect wash water and prevent migration outdoors.
4) No other activities (e.g., fluid changes, repairs, material storage) shall be performed in wash areas.
5) Keep the wash bay neat and well organized. Sweep or pick up all trash and debris daily or as needed.
6) Solid materials accumulated on vehicles or in vehicle beds (e.g. salt, soil, grass, etc.) shall be knocked off or otherwise removed from the vehicle (while inside the wash bay) prior to washing. Solid materials shall be collected and disposed of properly.
7) For vehicles too large to completely fit in the wash bays, only the portion of the vehicle physically located in the confines of the wash bay shall be cleaned. The vehicle shall then be rotated to allow for the remaining portion of the vehicle to be washed.
8) Use nozzles that automatically turn off water when not in use and consider high-pressure, low-volume sprays.
9) Avoid detergents as much as possible. If detergents are necessary, use a biodegradable, phosphate-free detergent.
10) If discharging to an oil-water separator, use a non-emulsifying detergent.
11) Inspect floor drain systems, holding tanks, and conveyances associated with designated wash areas regularly. Maintain oil/water separators and/or process flowthrough separators on a routine basis.
12) Use commercial car washes when vehicle or equipment washing cannot be performed onsite without causing impacts to stormwater.
13) If washing must occur onsite and outdoors, use a designated impervious area that is marked with posted signs indicating proper washing procedures. This area must be bermed to contain the wash water and graded to direct the wash water to the sanitary sewer, an oil-water separator, a holding tank, a dead-end sump, or other containment area. Captured water shall be disposed of properly.
14) Avoid steam cleaning and engine/undercarriage washing which can produce high pollutant concentrations. If steam cleaning or engine washing is necessary, perform such cleanings within isolated indoor areas, and ensure wash water is treated and discharged to the sanitary sewer (if permitted to do so) or captured for off-site disposal.
15) Train staff in proper washing techniques and how to confine washing to designated wash areas.
16) Consider alternatives to washing such as using air to blow grass and debris from small equipment, wet-wiping equipment with rags, etc.

BMP Fact Sheet

MATERIAL STORAGE

GH-06

Not Applicable ☒ Applicable ☐

CONCERN

The storage of petroleum products, chemicals, paints, cleaners, pesticides, fertilizers, bags of erodible materials like sand, cement, and soil, and other potential pollutants can negatively impact surface waters through the accidental releases or leaching of materials into stormwater. Unprotected outdoor storage areas can generate a wide range of stormwater pollutants, such as sediment, nutrients, toxic materials, and petroleum products.

POLLUTION PREVENTION MEASURES

1) Whenever possible, store containers (e.g. drums, bins, bags, cans, and totes) indoors or under cover to limit exposure to stormwater.
2) Designate specific areas for material delivery and storage that are away from heavy traffic areas, storm drains, stormwater conveyances, and areas of concentrated run-off.
3) Designated outdoor storage areas should be paved or consist of an impervious surface.
4) Provide secondary containment for materials whenever possible or required per regulation.
5) Store materials on pallets to prevent stormwater run-on from coming into contact with materials, prevent container corrosion, and allow for better leak detection. Pallets must be in good condition and promptly replaced once damaged or deteriorated.
6) Stack containers according to the manufacturer's recommendations to avoid damage.
7) Immediately replace damaged, corroded, or leaking containers.
8) Ensure all storage containers are clearly labeled with their contents.
9) Keep containers tightly sealed after use.
10) Maintain an accurate inventory of hazardous substances and limit on-site storage to that which is necessary to support facility operations.
11) Keep storage areas neat and well organized; remove debris and unneeded material promptly.
12) If empty drums are stored outdoors, ensure that all openings are equipped with caps to prevent water intrusion and that the drum/storage area is labeled "Empty Drums".
13) Have an adequate supply of appropriate spill response equipment readily available and clean up all spills and releases immediately utilizing dry cleaning techniques (e.g. sweeping/absorbents).
14) Clean up all migrating dry materials upon discovery and address the source of the release.
15) Provide perimeter controls (e.g., berms, rock check dams, etc.) for erodible stockpiles of materials such as mulch, sand, and gravel to prevent migration into the stormwater system.
16) Routinely inspect material storage areas for leaks, material migration, and damaged or corroded containers. Ensure that secondary containment and other perimeter controls are in satisfactory condition.
17) Additional visual inspections of outdoor storage areas should be conducted after significant rainfall events (i.e., greater than 0.5 inches).

BMP Fact Sheet

ABOVEGROUND STORAGE TANKS

GH-07

Not Applicable ☐ Applicable ☒

CONCERN

Aboveground storage tanks (ASTs) may be used to store fuels, automotive fluids, chemicals, or deicing fluids. Leaks from tanks, piping, or other equipment and releases during fluid transfers can all impact stormwater quality. It is critical to maintain ASTs in good working condition to prevent spills and/or releases from occurring. Improperly managed storage tanks can cause significant environmental impacts.

POLLUTION PREVENTION MEASURES

General *(applicable to all storage tanks)*

1) ASTs should be installed and maintained in accordance with COMAR 26.10 and applicable fire codes.
2) ASTs should be provided with secondary containment, whenever feasible or required by regulation.
3) Secondary containment areas shall be maintained clean and dry; drain valves must be kept closed; accumulated liquid shall only be discharged if there are no visible signs of impacts, and in accordance with applicable regulations.
4) Inspect ASTs monthly to identify any leaking or malfunctioning equipment and ensure tanks are functioning as designed.
5) ASTs shall be equipped with a form of liquid-level detection (i.e. sight gauge, electronic monitoring).
6) ASTs shall be equipped with overfill prevention (i.e. overfill alarm and/or overfill prevention valve).
7) Tanks and piping should be protected from vehicle impact via barriers, bollards, guard rails, etc.
8) Install ASTs on solid foundations over impervious surfaces, and away from areas of concentrated run-off, storm drains, and other stormwater conveyances.
9) Properly label all storage tanks (e.g., contents, capacity, etc.).
10) Keep remote fills and fill port spill buckets clean and dry.
11) Keep fill ports, gates, and tank areas secured when not in use to prevent fuel theft and tampering.
12) Have an adequate supply of appropriate spill response equipment readily available and clean up all spills and leaks immediately utilizing dry cleaning techniques (e.g. absorbents and brooms).
13) Facilities that maintain 1,320 gallons or more of aboveground oil products shall prepare and implement a Spill Prevention, Control, and Countermeasure (SPCC) Plan, per 40 CFR 112.
14) Facilities that maintain 1,000 gallons or more of used oil or 10,000 gallons or more of virgin oil in ASTs shall obtain an Individual Oil Operations Permit from the MDE, per COMAR 26.10.01.09.
15) Owners/Operators of facilities that maintain more than 2,500 gallons of oil in ASTs are required to register each AST with MDE, per COMAR 26.10.01.10.

Bulk Fluid Transfers (Deliveries)

1) All bulk fluid transfer operations shall be performed under the direct supervision of knowledgeable County personnel. At no time shall the delivery vehicle or delivery vehicle operator be unsupervised.
2) The product level within the tank must be measured and available capacity verified before delivery.
3) Deliveries shall be made via fill ports equipped with catch basins to capture drips and spills.
4) Ensure an adequate supply of appropriate spill response equipment is readily available.
5) Post signs in delivery area displaying proper delivery procedures and emergency contact information.

ABOVEGROUND STORAGE TANKS

Used Oil Tanks

1) County personnel must verify the level of product in used oil tanks prior to filling.
2) Used oil tanks should only be filled via designated fill ports. Pumping used oil into the tank via a closed piping system is preferred to manually pouring used oil into the tank.

Brine Tanks

1) If multiple tanks are located onsite, the tanks should be plumbed to ensure that the complete failure of one tank will not drain all the tanks in the system (tanks must be isolated).
2) Minimize seeping and leaking at fittings by properly supporting piping and fittings, using flexible connectors or hoses to reduce stress, and installing corrosion-resistant fittings.
3) Consider placing hoses in non-permeable trenches or using drip-less nozzles to reduce repeated small spills.

RESIDENT DROP-OFF CENTER

GH-08

Not Applicable ☒ Applicable ☐

CONCERN

Resident Drop-Off Centers are publicly accessible facilities where residents can drop off used automotive fluids (i.e. oil or antifreeze), municipal waste, recyclable, and/or organic waste, typically free of charge. Improper transfer or management of the waste materials can allow a number of pollutants including oils and greases, toxic and chemical compounds, nutrients, metals, and other wastes to enter waterways.

POLLUTION PREVENTION MEASURES

General *(applicable to all materials collected)*

1) Clearly identify waste materials accepted by the facility, and clearly mark designated collection areas.
2) Waste material should be inspected by a County representative, prior to disposal.
3) Avoid positioning waste receptacles near storm drains, water bodies, or areas of concentrated runoff.
4) When practical, receiving areas should be covered.
5) Do not allow containers to overflow or waste materials to accumulate on the ground.

Automotive Fluid Collection

1) Used oil, antifreeze, and automotive fluid receiving areas should be on impervious surfaces, covered, and provided with secondary containment, which shall be maintained clean and dry.
2) Provide lidded waste receptacles in the receiving area for the public to dispose of empty containers. Waste receptacles shall be emptied routinely and waste disposed of properly.
3) Collection areas shall be inspected daily and all trash and spilled liquids appropriately cleaned up.
4) The available capacity of waste liquid collection containers shall be routinely verified and waste removals scheduled, as needed.
5) Install appropriate controls to prohibit the overfilling of waste fluid collection containers.
6) Place appropriate spill response equipment in close proximity to drop-off areas.
7) If aboveground tanks are used to collect waste fluids, refer to BMP Fact Sheet GHP-07 (Aboveground Storage Tanks) for additional recommendations.

Organic Debris Collection

1) Routinely transfer collected organic debris/waste to a composting or disposal facility.
2) Do not permit composting of organic waste except at properly designed and permitted facilities.
3) Enact controls to prevent leaves and other windblown debris from entering stormwater inlets.

Municipal Waste / Recyclables Collection

1) Refer to BMP Fact Sheet GHP-01 (Waste Management) for additional recommendations.

BMP Fact Sheet

STOCKPILES

GH-09

Not Applicable ☒ Applicable ☐

CONCERN

The County may stockpile various erodible materials, the type of material can vary depending on the needs of the County. Stockpiled material may include soil, sand, millings, slag, cinders, sawdust, landscaping bark, compost, etc. Exposed stockpiles can easily erode due to wind or precipitation and contribute suspended solids to stormwater runoff.

POLLUTION PREVENTION MEASURES

1) Maintain stockpiles of erodible materials within roofed storage buildings or covered storage bins, if feasible. If not, stockpile material on an impervious surface and cover the stockpile.
2) Temporary stockpiles should be placed on an impermeable membrane (tarp) for quick clean-up.
3) Locate stockpiles away from drain inlets, catch basins, swales, areas of concentrated stormwater flow, water bodies, and environmentally sensitive areas.
4) Divert stormwater flows away from/around the stockpiles using a diversion device (e.g., temporary swale, berm, sandbags, or diversion fence).
5) Cover temporary stockpiles of erodible materials with a tarp that has been adequately secured. The covers must be in place at all times when the stockpile is not in active use.
6) When accessing a portion of the stockpile, only remove a section of the cover to minimize exposure to the elements.
7) Use barriers to isolate stockpiled materials from high-traffic areas to prevent tracking of materials.
8) Sweep (do not wash or hose down) in front of material stockpile storage areas at regular intervals, following loading and unloading activities, and during times of heavy use.
9) If material is observed migrating from the stockpile, clean up all migrated material upon discovery and provide additional controls to reduce migration from the stockpile. If such measures are ineffective implement controls to capture pollutants before they migrate off-site (e.g. silt fencing, inlet filters, filter socks, at-grade inlet protection, etc.).
10) Minimize material stockpile inventory based on historical inventory/usage records and public safety operational needs.
11) Cold mix asphalt shall be stored on and covered with plastic sheeting or comparable material.
12) Routinely inspect outdoor material stockpiles to verify existing controls are functioning properly and for signs of erosion or material transport.

BMP Fact Sheet

DEICING MATERIALS

GH-10

Not Applicable ☒ Applicable ☐

CONCERN

When salt and other de-icing materials are stored outside and uncovered, they have a much higher risk of being eroded and transported offsite by stormwater. Improper de-icing material and sand storage may result in stormwater runoff containing elevated concentrations of sodium chloride and dissolved solids. Sodium chloride (e.g., road salt) is an effective deicer but can be highly corrosive to stormwater facilities. Smaller waterways are at a higher risk to increases in salinity, which can threaten aquatic species. Additionally, runoff containing sodium chloride has the potential to reach drinking water sources where small traces can adversely impact public health.

POLLUTION PREVENTION MEASURES

1) Bagged de-icing chemicals must be stored indoors. If stored outdoors bags must be kept on pallets (off the ground) and covered at all times. Bags must be intact without holes or openings.
2) Bulk de-icing materials shall be stored under cover and on an impervious surface.
3) Bulk salt storage areas/buildings shall not be overfilled so that salt spills out beyond the entrance of the storage area/building.
4) Bulk salt storage areas/buildings shall be maintained in a structurally sound condition and in a way that prevents the release of salt and the infiltration of stormwater. Deicing materials should not touch the sides of metal storage containers.
5) Barriers such as berms, gates, knee walls, tarps, and/or straw bales shall be placed at the entrances of bulk salt storage areas/buildings to prohibit the migration of salt and prevent contact with precipitation/stormwater runoff.
6) Routinely inspect storage areas for migrating materials or deterioration of containment structures. Sweep up all migrating materials upon discovery and repair the source of the migrating pollutant.
7) Loading areas should be constructed of impervious material and covered or enclosed, to the extent practical, to reduce potential contact with stormwater.
8) Minimize the distance de-icing materials are transported during loading/unloading activities.
9) Prevent and/or minimize the spillage of salt and de-icing materials during loading/unloading activities, immediately clean spilled or tracked materials.
10) Sweeping of storage and loading/unloading areas shall be conducted immediately following loading/unloading activities.
11) Do not store de-icing materials (bulk or bagged) over or immediately adjacent to drains or waterways.
12) Control site drainage by diverting stormwater run-on away from storage/loading areas using appropriate measures (e.g., curbing, berms, etc.).
13) Slope storage/loading areas to direct salt-contaminated runoff to an appropriate collection area, and in a manner that prevents the runoff from reaching adjacent soil or surface waters.
14) Excess salt shall be removed from salt handling equipment (trucks, spreaders, etc.) following use/prior to storage. All cleaning shall occur on an impervious surface, which is sloped or curbed to contain any washwater and direct it to a collection area for recycling or proper disposal.

Appendix A

GHP Site Inspection Checklist

GOOD HOUSEKEEPING PLAN (GHP)
SITE INSPECTION CHECKLIST

Facility Name: _____ **Inspection Date:** _____

Inspector Name: _____ **Inspector Signature:** _____

- The intent of this inspection is to ensure that the site is being properly maintained and that there are no visible signs of pollutants entering the stormwater system.
- **A shaded status box designates an item in a non-compliant status. Please provide an explanation for all non-compliant items and subsequently document all corrective actions performed.**
- Retain the completed checklists for five (5) years.

Item	Status			CORRECTIVE ACTIONS/COMMENTS *Items which cannot be corrected immediately must be reported to the GHP/NPDES Program Manager*
	Yes	No	N/A	
GENERAL HOUSEKEEPING				
1. Are exterior areas of the facility free of accumulated trash, debris, and unneeded materials?				
2. Are stormwater drains and inlets free from debris, sediment, and evidence of spills/releases?				
3. Is the facility free from signs of erosion?				
4. Are paved surfaces free of accumulated sediment?				
5. Is spill response equipment available in maintenance areas, fueling areas, hazardous material storage areas, and/or other required areas?				
6. Are spill kits and absorbent materials clearly labeled and accessible (i.e. items are not piled on top of or in front of spill kits)?				
7. Are spill kits secured from being stolen or misused?				
8. Is there a labeled container present for the disposal of used spill cleanup material?				

GOOD HOUSEKEEPING PLAN (GHP)
SITE INSPECTION CHECKLIST

Item	Status			CORRECTIVE ACTIONS/COMMENTS *Items which cannot be corrected immediately must be reported to the GHP/NPDES Program Manager*
	Yes	No	N/A	
9. Does spill response equipment (i.e. spill kits, absorbent materials) need to be replenished?				
WASTE MANAGEMENT				
10. Are areas around solid waste containers/roll-offs/compactors free of excessive trash accumulation or overflowing containers?				
11. Are areas around solid waste containers/roll-offs/compactors free of visible evidence (i.e. leaks, staining) of ongoing stormwater pollution?				
12. Are scrap metal containers in good order and free from evidence of leaking oil/grease?				
13. For dumpsters, roll-offs, and other waste receptacles, where leaks are observed, have appropriate controls (e.g. containment, spill response, etc.) been enacted?				
14. Are the lids (if present) to solid waste containers closed?				
15. Is street sweeping/vactor waste being managed appropriately (i.e. no evidence of material migration)?				
16. Is waste cooking grease managed appropriately (i.e. no evidence of spilled material or excessive staining)?				
VEHICLE & EQUIPMENT STORAGE				
17. Are stored vehicles/equipment free from leaks?				
18. If leaks are present, are they being managed appropriately (drip pan or other methods in place to capture released liquids)?				
19. Are storage areas free of visible evidence of chronic leaks/spills (i.e. significant staining)?				

GOOD HOUSEKEEPING PLAN (GHP)
SITE INSPECTION CHECKLIST

Item	Status			CORRECTIVE ACTIONS/COMMENTS *Items which cannot be corrected immediately must be reported to the GHP/NPDES Program Manager*
	Yes	No	N/A	
VEHICLE & EQUIPMENT REFUELING				
20. Are the areas around refueling areas free from evidence of spills or leaks?				
21. Are refueling areas free of used absorbent material that has not been swept/cleaned up?				
22. Do fuel dispensers and hoses appear to be in good working order and well-maintained?				
VEHICLE MAINTENANCE				
23. Is there any indication that vehicle maintenance activities are being conducted outdoors?				
24. Is there any indication that vehicle maintenance activities are contributing to stormwater pollution?				
VEHICLE & EQUIPMENT WASHING				
25. If performed on-site, does all vehicle/equipment washing occur indoors?				
26. Is wash water collected and disposed of properly?				
27. Is there any indication that vehicle/equipment wash water is being released to stormwater conveyances or pervious areas?				
MATERIAL STORAGE				
28. Are all outdoor storage areas free from visible signs of leaks or spilled material?				
29. Are material storage containers in good condition?				

GOOD HOUSEKEEPING PLAN (GHP)
SITE INSPECTION CHECKLIST

Item	Status			CORRECTIVE ACTIONS/COMMENTS *Items which cannot be corrected immediately must be reported to the GHP/NPDES Program Manager*
	Yes	No	N/A	
30. Are drums, totes, and other containers (that are <u>not</u> empty) stored off the ground and covered, or stored indoors?				
31. Are liquid-containing drums/totes located outdoors provided with secondary containment?				
32. Are containers that are located outdoors equipped with closed lids except when material transfers are occurring?				
33. Are materials, which could impact stormwater, stored away from heavy traffic areas, or protected from vehicle collisions?				
34. Are chemical storage containers properly labeled?				
35. If empty drums are stored outside, are all openings equipped with caps to prevent water intrusion?				
ABOVEGROUND STORAGE TANKS				
36. Are all storage tanks, and surrounding areas free from visible signs of leaks or spilled material?				
37. Do storage tanks appear to be in good working order (e.g. free of obvious signs of damage or malfunctioning equipment)?				
38. Are remote fills associated with tanks free of liquid and debris?				
RESIDENT DROP-OFF CENTERS				
39. Are waste collection areas clearly identified?				
40. Are used oil/antifreeze collection tanks, containment structures, and surrounding areas free from visible signs of leaks or spilled material?				

GOOD HOUSEKEEPING PLAN (GHP)
SITE INSPECTION CHECKLIST

Item	Status			CORRECTIVE ACTIONS/COMMENTS *Items which cannot be corrected immediately must be reported to the GHP/NPDES Program Manager*
	Yes	No	N/A	
41. Do used oil/antifreeze collection tanks appear to be in good working order (e.g. free of obvious signs of damage or malfunctioning equipment)?				
42. Are empty used oil/antifreeze containers being collected and disposed of in the trash?				
43. Are areas around waste/recyclables containers free of excessive trash accumulation or overflowing containers?				
44. Are areas around waste/recyclables containers free of visible evidence (i.e. leaks, staining) of ongoing stormwater pollution?				
45. Are organic debris collection areas free of visible evidence of ongoing stormwater pollution (e.g. leaves and debris in stormwater conveyances)?				
STOCKPILES				
46. Are material piles, including salt, soil, sand, and millings isolated (i.e. covered, bermed, etc.) to prevent stormwater run-on and run-off?				
47. Are areas surrounding material piles (e.g. salt, soil, sand, millings, etc.) free of tracked or migrated material?				
DEICING MATERIALS				
48. Are all deicing materials stored indoors or undercover?				
49. Are salt storage structures in good condition (e.g. no evidence of material escaping or stormwater infiltration)?				
50. Is the salt loading area clean?				

GOOD HOUSEKEEPING PLAN (GHP)
SITE INSPECTION CHECKLIST

Item	Status			CORRECTIVE ACTIONS/COMMENTS *Items which cannot be corrected immediately must be reported to the GHP/NPDES Program Manager*
	Yes	No	N/A	
51. If deicing materials are tarped, is the tarp secure and covering the entire pile?				
52. Are bags of salt stored indoors, or off the ground and covered?				

ADDITIONAL COMMENTS:

Appendix B

GHP Stormwater Conveyance System Inspection Checklist

GOOD HOUSEKEEPING PLAN (GHP)
STORMWATER CONVEYANCE SYSTEM INSPECTION CHECKLIST

Facility Name: _____ **Inspection Date:** _____

Inspector Name: _____ **Inspector Signature:** _____

- The intent of this inspection is to ensure the free flow of stormwater within on-site conveyance systems and prevent damage/flooding.
- **If maintenance is needed, please provide an explanation, and document all corrective actions performed.**
- **Inspections shall include visually accessible infrastructure only; at no time shall inspection personnel enter a confined space.**
- Retain the completed checklists for five (5) years.

Item	Item Checked (Y/N/NA)	Maintenance Needed (Y/N)	CORRECTIVE ACTIONS/COMMENTS *Items which cannot be corrected immediately must be reported to the GHP/NPDES Program Manager*
CATCH BASINS / INLETS			
1. Look for debris and sediment blocking catch basin grates. If found, remove.			
2. Look for damage or cracks to the frame, grate, basin walls or bottom. If found, schedule repairs or replacement.			
3. Look for sediment and debris in the catch basin sump. If sediment fills 60% of the sump or comes within 6” of a pipe it should be scheduled for cleaning.			
4. If any type of filtering device is present, verify that the filter is not clogged, torn, or damaged; clean if clogged, replace if damaged.			
PIPES / CULVERTS			
5. Look for evidence of clogged piping (e.g. visual obstructions, standing water within manholes/inlets structures, etc.). If found, remove or schedule cleaning.			
6. Verify vegetation growth, if present, does not impede water flow. If it does, mow, cut back, or remove.			

GOOD HOUSEKEEPING PLAN (GHP)
STORMWATER CONVEYANCE SYSTEM INSPECTION CHECKLIST

Item	Item Checked (Y/N/NA)	Maintenance Needed (Y/N)	CORRECTIVE ACTIONS/COMMENTS *Items which cannot be corrected immediately must be reported to the GHP/NPDES Program Manager*
7. Inspect for damaged piping, inlets, outlets, headwalls, wingwalls, or excessive erosion. If found, make or schedule repairs.			
DITCHES / TRAPEZOIDAL SWALES			
8. Check for erosion, slumping, or undercutting. If found, make or schedule repairs.			
9. Look for trash and sediment accumulation. Remove all trash and remove sediment if it will impede water flow or clog downstream structures.			
10. Verify vegetation growth does not impede water flow. If it does, mow, cut back, or remove. Remove any trees or shrubs growing within the ditch.			
11. Check the integrity of check dams, filter socks, or other flow dissipation/filtering devices within the ditch or swale. Perform or schedule service if they are clogged, damaged, or deteriorated.			
12. Check inlets and outlets for debris accumulation, damage, or erosion. If found, make or schedule repairs.			

ADDITIONAL COMMENTS:

GUIDANCE DOCUMENT
GOOD HOUSEKEEPING PLAN - STORMWATER CONVEYANCE INSPECTIONS

INTRODUCTION

Maintaining catch basins, stormwater inlets, and other stormwater conveyance structures on a regular basis will remove pollutants, prevent backups, and ensure the system functions as intended to avoid flooding.

Each GHP-covered facility is required to conduct routine stormwater conveyance system inspections to ensure the free flow of stormwater within the conveyance system(s). The GHP includes a *"GHP Stormwater Conveyance System Inspection Checklist"*, to be used when completing the required inspections. This document provides additional background and guidance to aid facility personnel in completing the inspections.

CATCH BASINS / INLETS

Catch basins and inlets are all points for stormwater to enter storm drain systems. These structures are typically part of a larger conveyance system with many interconnected components where the impairment of one component can compromise the functionality of the larger system. Inlets and catch basins are subject to functional impairment by a variety of conditions, including:

- Structural damage including from vehicles and plows
- Cracks/joint separation at piping (inlet and outlet) connections
- Leaking due to cracks and joint separation
- Missing or damaged grates and grate frames
- Corrosion
- Blockage caused by debris, sediment, vegetation, or other objects

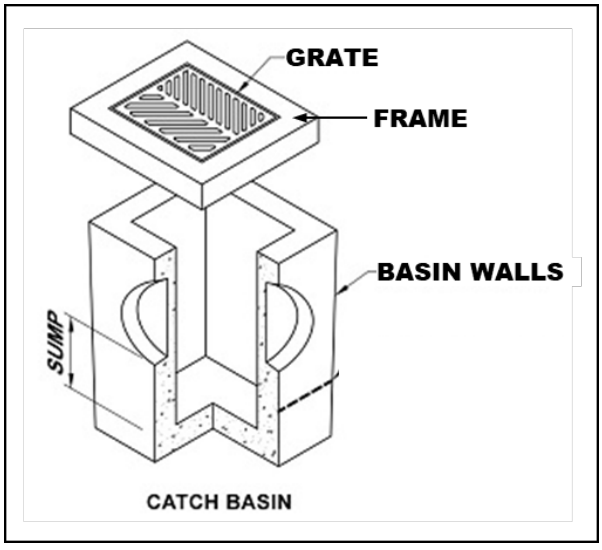

Figure 1 – Catch Basin Diagram

The following photos provide additional information related to the various inspection items, including examples of typical issues that may be encountered. The photo numbers correspond to the inspection checklist item number.

Inspection Item #1 [1]



Debris and sediment blocking inlet/catch basin grate.

Inspection Item #2 [2]



Damaged Grate

Inspection Item #2 [3]



Damaged Frame

Inspection Item #2 [4]



Failing brick walls with a stormwater inlet.

Inspection Item #2 [5]



Failing asphalt surrounding the inlet

[1] Grand Valley State University - https://www.gvsu.edu/groundswell/clogged-storm-drains-71.htm
[2] Georgia Department of Transportation – Stormwater System Inspection and Maintenance Manual, March 2020
[3] https://catchbasinauthority.ca/catch-basin-101/
[4] https://www.fixasphalt.com/catch-basin-repairs
[5] https://ccpia.org/catch-basin-and-manhole-inspections/

Inspection Item #3 [6]



Sediment and debris inside stormwater inlet

Inspection Item #3

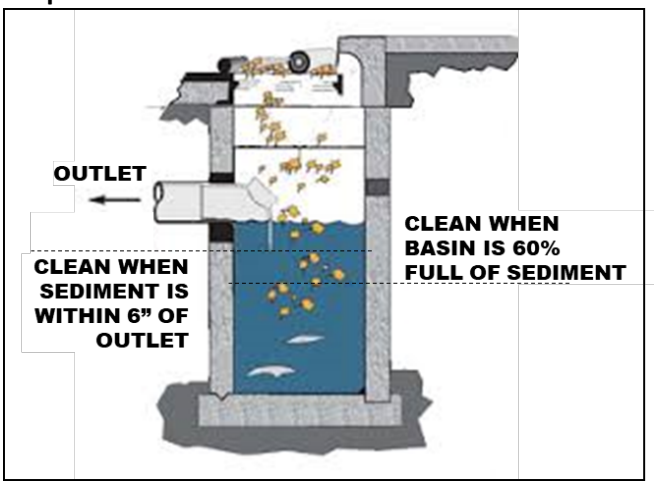

Remove sediment from a catch basin if it fills 60% of the sump or comes within 6" of a pipe.

Inspection Item #4 [7]



Example of inlet filter. Replace when filled or damaged.

Inspection Item #4 [8]



Example of an inlet filter sock, replace if damaged.

PIPES AND CULVERTS

Pipe systems are designed to convey stormwater runoff safely and effectively from inlets to various discharge points and outfalls. A culvert is a structure that channels water under an obstacle such as a roadway or railroad. These structures are subject to functional impairment by a variety of conditions, including:

- Blockage or obstruction due to build up of vegetation, debris, sediment, or other objects
- Cracks and/or joint separation
- Collapsed pipe
- Corrosion
- Root intrusion
- Lack of stabilization

[6] https://www.fixasphalt.com/catch-basin-repairs
[7] https://store.interstateproducts.com/products/Ultra-Drain-Guards/Ultra-Drain-Guard-Adjustable-Frame-Model
[8] https://www.newpig.com/pig-sediment-filter-sock/p/FLT787

Inspection Item #5 [9]



A pipe filled with sediment, inhibiting flow.

Inspection Item #5 [10]



Standing water around an inlet may indicate a blockage.

Inspection Item #6 [11]



Pipe conveyance filled with vegetation.

Inspection Item #7 [12]

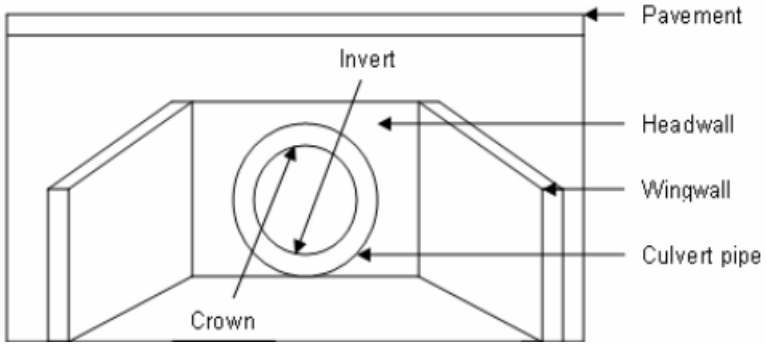

Diagram depicting various components of a culvert.

[9] Georgia Department of Transportation – Stormwater System Inspection and Maintenance Manual, March 2020
[10] https://www3.epa.gov/region9/water/npdes/stormwater-feature.html
[11] Georgia Department of Transportation – Stormwater System Inspection and Maintenance Manual, March 2020
[12] https://www.researchgate.net/figure/Components-of-a-Culvert_fig34_228685906

Inspection Item #7 [13]



A crack is the culvert headwall.

Inspection Item #7 [14]



Evidence of erosion around a culvert.

DITCHES AND SWALES

Ditches and swales serve similar functions. Both are used to convey stormwater. However, there are slight differences. A ditch is a narrow channel typically found along roads and at the edges of parking lots/driveways. A swale is like a ditch, but it is broad and shallow, and usually covered or lined with turfgrass or stone. Issues associated with these structures, which could impede their function include:

- Blockage or obstruction due to vegetation, debris, sediment, or other objects
- Erosion
- Rapidly moving water
- Lack of adequate vegetative cover for grass-lined channels

Inspection Item #8 [15]



Erosion and slumping within a drainage ditch.

Inspection Item #8 [16]



Slumping within a drainage swale.

[13] https://www.sbt-durabi.org/articles/xml/ARN0/
[14] https://lufkindailynews.com/news/local/culverts-crumbling-in-precinct-1/article_a9fed902-4379-5248-ab11-7471e2974298.html
[15] https://graniteseed.com/blog/how-to-stop-a-ditch-from-eroding/
[16] https://www.mnwcd.org/erosion-control

Inspection Item #9 [17]



Litter and debris within a ditch.

Inspection Item #9 [18]



Litter and debris within a swale.

Inspection Item #10 [19]



Cracks and joint separation in concrete channels, removal of vegetation may prevent future damage.

Inspection Item #11 [20]



Rock check dam across a channel.

Inspection Item #11 [21]



Filter sock check dams across a grass swale.

[17] https://craven.ces.ncsu.edu/2023/02/for-those-who-love-to-litter/
[18] https://www.cityoftulsa.org/government/departments/public-works/stormwater-quality/adopt-a-stream/
[19] Georgia Department of Transportation – Stormwater System Inspection and Maintenance Manual, March 2020
[20] EPA Stormwater Best Management Practice, Check Dams, December 2021
[21] EPA Stormwater Best Management Practice, Check Dams, December 2021

Inspection Item #12 [22]



Inlet to a rock-lined swale.

Inspection Item #12 [23]



Sediment accumulation at swale inlet.

END OF DOCUMENT

[22] https://www.stormwater.com/erosion-control/vegetation-management/article/13016118/inlet-protection-during-constructionand-after

[23] https://www.stormwater.com/erosion-control/vegetation-management/article/13016118/inlet-protection-during-constructionand-after

Appendix C

General Spill Response Procedures

SPILL RESPONSE AND NOTIFICATION PROCEDURES

A. Discovery of a Spill

1. Upon discovery of a spill, facility personnel should immediately assess the situation and determine if the spill is considered a "Minor" or "Major" spill. For a spill to be considered "Minor" all the following conditions must be satisfied:

    - ❖ The type of material spilled is known;
    - ❖ The spill is confined to the immediate work area;
    - ❖ The spill has not reached storm drains, sanitary sewer systems, open water, or surrounding soils;
    - ❖ The spill can be safely managed;
    - ❖ The employee can contain and clean up the spill with the PPE that is normally used in the work area;
    - ❖ The spill does not pose a serious threat of fire or an explosion; and
    - ❖ The spill does not pose conditions that are immediately dangerous to life or health.

2. If all the above conditions are met, the spill is considered "Minor". Refer to ***Section B*** of this document for appropriate response actions.

3. If all the above conditions are not met, then the spill is considered "Major". Refer to ***Section C*** of this document for appropriate response actions.

4. If a spill involves flammable liquids, ignitable vapors may be present - precautions must be taken to prevent ignition. Do not turn on or off equipment since sparks may be generated. Additionally, avoid the movement of equipment that could create static electricity. Larger spills of flammable liquids could pose a fire threat and would be considered a "Major" spill. Refer to ***Section C*** for appropriate actions.

B. Response to a "Minor" Spill

1. Identify the source of the spill and the direction in which the spill is heading.

2. Attempt to stop the spill at the source. Where applicable, the source of the spill shall be taken out of service until repairs can be made. If the spill is related to a fuel dispensing system, activate the Emergency Shut-Off (ESO) switch to prevent additional fuel disbursements.

3. If material is released outside a containment area, it is crucial that the material be contained as quickly as possible. Following proper safety procedures, use absorbent materials or diking to contain the spill. Prevent the spill from reaching storm drains, sanitary sewers, or open water. If a spill is flowing toward a drain, install temporary diking around the drain, block off the drain with a drain cover, or place absorbent material around the drain to prevent a discharge.

4. Once the spill has been stopped and contained, estimate the quantity of the spill. Consult applicable Safety Data Sheet (SDS) for material compatibility and environmental precautions. Note and follow recommendations regarding special precautions, spill response equipment, methods, or precautions. All cleanup work shall be conducted in accordance with existing safety protocols and SDS recommendations. Contact the facility Superintendent/Supervisor, or designee, for assistance if needed.

5. Recover or clean up the spilled material as much as possible. Material that cannot be reused must be discarded in accordance with state and federal regulations. Liquids absorbed by porous materials (e.g., wood, gravel, significant quantities of absorbent material, etc.) shall be placed into US DOT-approved 30-gallon or 55-gallon steel drums. Following cleanup, the container shall be secured and appropriately labeled to identify the contents and the date of the spill/cleanup. Containers shall be stored indoors and provided with secondary containment until transported off-site for disposal.

6. For spills that do not involve flammable liquids or other potential hazardous wastes, small quantities of used absorbent materials may be double bagged and disposed of along with municipal trash as long as all liquids have been absorbed (no free liquid may be present).

7. If the spilled material is a flammable liquid, corrosive liquid (pH ≤ 2 or ≥ 12.5), or other potential hazardous waste, all recovered product, impacted material, and used absorbent must be placed into a US DOT-approved containers/drums. Following cleanup, the container(s) shall be secured and appropriately labeled to identify the contents and the date of the spill/cleanup. Containers shall be stored indoors and provided with secondary containment until transported off-site for disposal. The facility Superintendent/ Supervisor, or designee shall be notified that a potential hazardous waste was released and that a waste characterization may be needed to facilitate proper disposal.

8. Surfaces that are contaminated by the spill shall be cleaned utilizing dry absorbent material. Tools and equipment that have been used in the cleanup must be decontaminated immediately after use. Decontamination water (if used) must be minimized, containerized, and disposed of properly.

9. If waste requires disposal, notify the facility Superintendent/Supervisor, or designee who will arrange for the proper characterization and disposal of any waste material. Representative sampling and analysis may be necessary to properly characterize the waste. The waste must be transported and disposed of in compliance with all applicable laws and regulations. Waste manifests, trip tickets, or bills of lading (if required) for waste disposal shall be kept on file.

10. Facility personnel shall restock/replace spill response equipment and absorbent materials used during the clean-up efforts.

11. The facility Superintendent/Supervisor, designee, or other appropriate County personnel shall be notified of the spill in accordance with ***Section D*** of this document.

C. Response to "Major" Spill

A "Major" spill is any discharge that does not meet the definition of a "Minor" spill. Any employee or contractor observing, being involved with, or recognizing a potential or actual spill of oil or other hazardous material, other than a "Minor" spill is responsible for performing the following actions:

1. If there is no danger to human health, attempt to stop and contain the spill at the source. If the spilled material is unknown, if PPE other than that which is typically used in your work area, is necessary to approach the spill area, or if assistance is required to stop the spill, do not attempt to contain the spill. If the spill is related to a fuel dispensing system, activate the Emergency Shut-Off (ESO) switch.

2. Most County employees lack the appropriate training to respond to "Major" spills. If the spill is of an unknown substance, is of a quantity that cannot be safely managed, or poses other risks beyond the training level of the employee, the employee should not attempt to contain or clean up the spill.

3. Evacuate individuals from the area and keep personnel away from the impacted area.

4. Immediately notify the facility Superintendent/Supervisor, or designee of the incident. The notified individual will determine the need for further evacuations and contact emergency response personnel (911), as necessary. *If a situation represents an immediate and grave danger to personnel, the public, structures, or other infrastructure, the individual discovering the incident may call 911 directly without first notifying facility management.*

5. The facility Superintendent/Supervisor or designee will determine if assistance from emergency response contractors is required to clean up the incident and will coordinate such spill response efforts with spill response contractors and other County agencies and first responders.

6. Facility personnel will provide assistance to emergency responders, as appropriate.

D. Reporting a Spill (Internal Notifications)

1. Once a spill is contained and cleanup operations have been initiated, the individual discovering the spill shall notify the appropriate County representatives and provide the following information:

    a) Identify the location, date, and time of the incident;
    b) Identify the type of material spilled or discharged;
    c) Estimate the quantity spilled and the rate of the spill;
    d) Identify the cause of the spill or discharge;
    e) Identify impacted media or infrastructure (soil, storm drains, open water bodies, etc.);
    f) Determine the extent of injuries involved; and
    g) Provide response measures implemented by the facility personnel.

E. Reporting a Spill (Regulatory Notifications)

State of Maryland Reporting Requirements (COMAR 26.10.01.05)

1. Upon discovery of a spill, the Responsible Person shall notify the MDE Emergency Response Division **within two (2) hours** by calling 866-633-4686. The caller shall be prepared to provide the following information:

    a) The time and date of the spill;
    b) The location and cause of the spill;
    c) The mode of transportation or type of facility involved;
    d) Type and quantity of oil spilled;
    e) Details regarding any assistance required;
    f) The name, address, and telephone number of the person making the report; and
    g) Any other pertinent information requested by the Department.

2. MDE will provide further guidance on additional responsibilities.

3. Within **ten (10) working days** of the completed removal and clean-up activities, the Responsible Person shall prepare a report using either County letterhead detailing the incident. The report shall contain the following:

    a) Date, time, and place of the spill;
    b) The amount and type of oil or hazardous substance spilled;
    c) A complete description of circumstances that contributed to the spill;
    d) A complete description of the containment and removal operations performed, including disposal sites to which oil refuse was transported;
    e) Procedures, methods, and precautions instituted to prevent the recurrence of an oil spill from the facility involved;
    f) Any other information considered necessary or required by the MDE for a complete description of the incident; and
    g) A certification that the information provided is true and correct to the knowledge of the person signing the report.

4. The completed report shall be submitted to mdeerd.mema@maryland.gov or faxed to 410-537-3932.

5. A digital copy of the completed report and any accompanying documentation shall be retained

Federal Reporting Requirements - National Response Center (40 CFR 110)

1. If any of the following criteria are met the Responsible Person shall notify the National Response Center (NRC) **within two (2) hours** of the spill discovery by calling 800-424-8802 or 202-426-2675.

    - ❖ The spill has caused a film, sheen, or discoloration of the surface water or shorelines;
    - ❖ The material spilled will violate applicable water quality standards (surface water or groundwater); or
    - ❖ The spill has caused a sludge or emulsion to be deposited beneath the surface of the water or on the shoreline.

2. At a minimum, the following information shall be provided to the NRC:

    a) Name, organization, and telephone number of reporting party;
    b) Name and address of the responsible party;
    c) Date, time, and location of the incident;
    d) Source and cause of the discharge;
    e) Type of material(s) discharged;
    f) Quantity of materials discharged;
    g) Danger or threat posed by discharge;
    h) Number and types of injuries (if any);
    i) Weather conditions at the incident location; and
    j) Other information to help emergency personnel respond to the incident.

3. If unable to report to the NRC, reports can be made to the EPA Regional Office at 800-438-2474 or the U.S. Coast Guard (USCG) at 202-372-1001. The NRC, EPA, or USCG will provide further guidance.

4. A digital record of the NRC notification and any accompanying documentation shall be retained on-site.

Federal Reporting Requirements - EPA Regional Administrator (40 CFR 112.4)

1. If the facility where the spill occurred is regulated under 40 CFR 112 and is required to have a Spill Prevention, Control, and Countermeasures (SPCC) Plan, the Responsible Person shall report the spill to the EPA Region III Administrator when any of the following criteria are met:

   - More than 1,000 gallons of oil is discharged to navigable waters or adjoining shorelines in a single incident; or
   - More than 42 gallons of oil is discharged to navigable waters or adjoining shorelines in each of two incidents occurring within any twelve-month period.

2. The report shall be made in writing **within 60 days** of the spill and shall contain:

   a) Name and location of the facility;
   b) Owner/operator name;
   c) Maximum storage/handling capacity of the facility and normal daily throughput;
   d) Corrective actions and countermeasures taken;
   e) Adequate description of the facility including maps, and flow diagrams;
   f) Cause of the discharge to navigable waters, including a failure analysis;
   g) Additional preventative measures taken or planned to minimize discharge reoccurrence; and
   h) Other information required by the EPA Regional III Administrator.

3. The report shall be submitted to the EPA Regional Administrator at the following address:

   EPA Regional Administrator
   US EPA Region 3
   1650 Arch Street (3RA00)
   Philadelphia, PA 19103-2029

4. A copy of the report shall be retained in the facility SPCC Plan.

Appendix D

Training Records

GOOD HOUSEKEEPING PLAN (GHP)
TRAINING ATTENDANCE LOG

FACILITY NAME: _____

DATE	NAME *(PRINT)*	SIGNATURE

By signing I affirm that I have completed the required annual training; and I am aware of and understand my responsibilities under this Plan.

GOOD HOUSEKEEPING PLAN (GHP)

Aldino Highway Maintenance Facility
3031 Hopewell Road
Havre de Grace, MD 21078

June 30, 2025

TABLE OF CONTENTS

1.0 BACKGROUND & INTRODUCTION 1
1.1 Objectives 1
1.2 Potential Stormwater Pollutants 1
2.0 RESPONSIBILITIES 3
2.1 GHP Implementation 3
2.2 Plan Review and Modification 3
2.3 Inspections 3
2.3.1 GHP Site Inspections 3
2.3.2 Conveyance System Inspections 4
2.4 Training 4
3.0 BEST MANAGEMENT PRACTICES (BMPs) 5
3.1 Applicability of BMP Fact Sheets 5
3.2 BMP Fact Sheets 5

List of Tables

TABLE 1-1 POTENTIAL STORMWATER POLLUTANTS AND THEIR SOURCES 2

List of BMP Fact Sheets

GH-01 - Waste Management
GH-02 - Vehicle and Equipment Storage
GH-03 - Vehicle/Equipment Refueling
GH-04 - Vehicle Maintenance
GH-05 - Vehicle/Equipment Washing
GH-06 - Material Storage
GH-07 - Aboveground Storage Tanks
GH-08 - Resident Drop-Off Centers
GH-09 - Stockpiles
GH-10 - Deicing Materials

Appendices

Appendix A: GHP Site Inspection Checklist
Appendix B: GHP Stormwater Conveyance Inspection Checklist
Appendix C: General Spill Response Procedures
Appendix D: Training Records

List of Acronyms

AST	-	Aboveground Storage Tank
BMP	-	Best Management Practice
CFR	-	Code of Federal Regulations
GHP	-	Good Housekeeping Plan
MDE	-	Maryland Department of the Environment
MS4	-	Municipal Separate Storm Sewer System
NPDES	-	National Pollutant Discharge Elimination System
SPCC	-	Spill Prevention, Control, and Countermeasure Plan

1.0 BACKGROUND & INTRODUCTION

Polluted stormwater runoff has the potential to enter the County's storm sewer systems (referred to as a municipal separate storm sewer system or MS4), and then discharge, untreated, into local water bodies. To address this potential stormwater pollution, the County is required to obtain a NPDES permit from the Maryland Department of the Environment (MDE). The NPDES Permit requires the County to take actions to prevent stormwater pollution, maintain storm sewer systems, monitor stormwater discharges, and develop and implement comprehensive management programs to minimize the discharge of pollutants from the storm sewer system.

To comply with Part IV.D.4.b of the County's Phase I MS4 Permit, the County must develop, implement, and maintain a Good Housekeeping Plan (GHP) for certain County-owned properties not required to be covered under Maryland's General Permit for Discharges from Stormwater Associated with Industrial Activities *(General Permit 12-SWA / 20-SW).*

To support this effort, a *"Good Housekeeping Plan Applicability Certification"* has been developed to evaluate and document if a specific County-owned facility is subject to the GHP requirements. The *"GHP Applicability Certification"* includes the following ten (10) potential stormwater polluting activities. If any of the covered activities are performed at the facility, then that facility is required to implement a site-specific GHP. The GHP will include each of the potential stormwater polluting activities identified in the *"GHP Applicability Certification"* and corresponding pollution prevention procedures.

- Waste Management
- Vehicle and Equipment Storage
- Vehicle/Equipment Refueling
- Vehicle Maintenance
- Vehicle/Equipment Washing
- Material Storage
- Aboveground Storage Tanks
- Resident Drop-Off Center
- Stockpiles
- Deicing Materials

1.1 Objectives

The GHP was developed to outline suitable practices, procedures, and protocols, or Best Management Practices ("BMPs") for reducing and/or preventing stormwater pollution associated with operations at covered County-owned properties. The intent of the pollution prevention procedures included in the GHP is to limit the release of materials with the potential to impact stormwater, this includes reducing or eliminating (to the extent practical):

- The occurrence of spills and leaks;
- The accidental dumping or release of materials;
- The accumulation of waste, trash, debris, unused parts/equipment, etc.;
- The exposure of hazardous materials to precipitation/run-off;
- Stormwater run-off contamination by improperly stored materials; and/or
- Illicit discharges to the storm drain system.

1.2 Potential Stormwater Pollutants

Table 1-1 on the following page provides a list of common potential pollutants that may result from the GHP-regulated activities identified above. Understanding the sources of these pollutants can help in achieving the goals and objectives of the GHP program.

TABLE 1-1 POTENTIAL STORMWATER POLLUTANTS AND THEIR SOURCES

		Waste Management	Vehicle/Equipment Storage	Vehicle/Equipment Refueling	Vehicle Maintenance	Vehicle/Equipment Washing	Material Storage	Aboveground Storage Tanks	Resident Drop-Off Center	Stockpiles	Deicing Materials
Pollutants	**Sources**	**Associated GHP Activity**									
Sediment	Land disturbance; erosion; paved surfaces; material stockpiles; waste storage; salt/abrasive application	X				X	X		X	X	X
Hydrocarbons *(petroleum compounds)*	Leaking vehicle and equipment; vehicle and equipment cleaning; spills; improper storage; maintenance activities; scrap metal disposal; improper disposal	X	X	X	X	X	X	X	X		
Metals	Vehicle brake and tire wear; vehicle/equipment exhaust; batteries; galvanized metal; paint and wood preservatives; fuels, pesticides, and cleaners; vehicle fueling, maintenance, and washing; industrial waste	X	X	X	X	X	X	X	X		
Toxic Chemicals	Pesticide application; improper chemical storage; leaks and spills from storage containers; leaking vehicles; maintenance activities	X	X		X	X	X	X	X		
Chlorides	De-Icing chemicals										X
Trash/Debris	Improper waste storage and disposal; leaking trash containers; littering; poor housekeeping	X	X				X		X		
Nutrients (nitrogen and Phosphorus)	Fertilizers; malfunctioning septic systems; sewer overflows; animal/pet waste; vehicle washing; decaying grass and leaves; leaking trash containers; atmospheric deposition	X				X	X		X		

2.0 RESPONSIBILITIES

2.1 GHP Implementation

A separate GHP is required for each covered facility. The following individual *(identified by name and/or title)* is accountable for the administration and implementation of the GHP at this facility and has the authority to commit the necessary resources to implement this Plan.

_____

Name and/or Title of Responsible Person

The Responsible Person listed above shall ensure that facility personnel involved in any GHP-covered activities identified in this Plan, are provided with access to, and are familiar with, the contents of this Plan.

2.2 Plan Review and Modification

The *"GHP Applicability Certification"* completed for this facility must be reviewed and updated once every permit term, or within one (1) year of substantial changes to a facility's operations that could reasonably contribute to stormwater pollution. Any newly constructed/acquired facility must be assessed within one (1) year of initiating operations at the facility. The facility's GHP must be amended and reissued to the facility within one (1) year of any changes to the facility's *"GHP Applicability Certification"*.

When warranted, the BMP Fact Sheets provided in Section 3.0 may need to be updated or revised. At the same time, additional BMP Facts Sheets may be added. The need for such updates or modifications will be at the discretion of the County's GHP Program Administrator.

2.3 Inspections

The County's MS4 permit requires each facility covered by a GHP to have the following:

1. Written procedures for annually assessing County properties to prevent the discharge of pollutants, spills, and leaks into the County's storm sewer system; and

2. Written procedure for performing stormwater conveyance system inspections and for removing debris that may cause clogging, backups, and flooding.

To meet these requirements, each facility that is covered by a GHP will be required to complete routine site inspections and stormwater conveyance system inspections as detailed below. Facility management will be responsible for ensuring the necessary inspections are completed within the required timeframes, that corrective actions (if needed) are performed, and that records of inspections and completed corrective actions are maintained for at least five (5) years.

2.3.1 GHP Site Inspections

The GHP Site Inspection will be performed to ensure that each GHP-covered facility is being properly maintained and that there are no visible signs of pollutants entering the stormwater system. GHP facilities shall utilize the *"GHP Site Inspection Checklist"*, provided in ***Appendix A*** to complete the required inspection. At a minimum, each facility is to be inspected every five (5) years.

2.3.2 Conveyance System Inspections

Stormwater conveyance systems are generally comprised of curbs and gutters, catch basins, inlet structures, swales, channels, piping, culverts, detention ponds, outfalls, or other structures that are used to collect, contain, and convey stormwater runoff.

The unimpeded movement of stormwater through conveyance systems is critical in avoiding backups and flooding, which can impede facility operations and damage property. Routine inspections and preventative care of stormwater conveyance systems can ensure these systems function as intended and prevent the need for costly and time-consuming repairs and retrofits.

Each GHP-covered facility is required to conduct routine stormwater conveyance system inspections to ensure the free flow of stormwater within the conveyance systems. GHP-covered facilities shall utilize the *"GHP Stormwater Conveyance System Inspection Checklist"*, provided in ***Appendix B*** to complete the required inspections. At a minimum, facility conveyance system inspections are to be conducted every five (5) years.

2.4 Training

As part of the GHP requirements within the County's Phase I NPDES permit, annual training must be provided to all appropriate staff and contractors. Such training shall be provided to any individuals responsible for implementing the GHP, performing the required inspections, or involved in any of the GHP-covered activities identified in this Plan. The required training shall focus on the duties and responsibilities assigned to site personnel in implementing the GHP and the best management practices (BMPs) prescribed in this Plan for preventing, reducing, and eliminating the discharge of pollutants during facility activities.

The County's MS4/GHP Program Coordinator will be responsible for developing the required training and disseminating it to GHP-covered facilities. Each GHP-covered facility will be responsible for identifying staff/contractors who must attend annual training, ensuring identified staff complete the required training, and maintaining records that document training dates and attendees. Training records and other documentation shall be maintained in ***Appendix D*** of this Plan.

3.0 BEST MANAGEMENT PRACTICES (BMPs)

This section contains a BMP Fact Sheet for each of the ten (10) GHP-regulated activities. The County's operations are not limited to the BMPs contained within this document; nor is the County required to implement all of the pollution prevention measures identified within each BMP Fact Sheet. The County should select and implement those measures that are applicable and have the greatest potential for reducing stormwater pollution.

The BMP Fact Sheets contained within this document offer recommended protocols for a particular activity. These pollution prevention measures are considered non-structural BMPs with a focus on source control of potential pollutants.

3.1 Applicability of BMP Fact Sheets

The *"GHP Applicability Certification"* completed for this facility has identified the activities conducted at this facility that require coverage under this Plan. Each of the BMP Fact Sheets shall be marked as to whether they are applicable or not applicable to this facility. The Applicable/Not Applicable indicator on each BMP Fact Sheet can be revised in response to changes in operations at the facility.

3.2 BMP Fact Sheets

BMP Fact Sheets can be found on the following pages. For the sake of consistency, the general outline of a BMP Fact Sheet will be as follows:

- Identification of GHP-covered activity.
- Applicability of the BMP Fact Sheet to the facility.
- A general description of the concern the activity poses to stormwater.
- Recommended pollution prevention measures for reducing/eliminating stormwater pollution.
- Additional sources of information, if applicable.

BMP Fact Sheet

WASTE MANAGEMENT

GH-01

Not Applicable ☒ Applicable ☐

CONCERN

Improperly managed waste can allow trash and debris to be washed into storm drains which poses a concern to water quality, marine life, and public health. It also has the potential to create obstructions in the drainage system, which can lead to backups and flooding. Additionally, improper storage and handling of waste materials can allow pollutants including oils and greases, toxic and chemical compounds (including nutrients), bacteria, metals, and other potentially hazardous wastes to enter waterways.

POLLUTION PREVENTION MEASURES

General *(applicable to all waste management activities)*

1) Provide suitable containers, preferably with working covers, to collect waste materials.
2) Ensure that appropriate waste containers are available in areas where waste is generated.
3) Provide a cover over waste storage areas, if feasible.
4) Avoid positioning waste receptacles near storm drains, water bodies, or areas of concentrated runoff.
5) Ensure that lids to waste containers *(if present)* are kept closed to prevent the intrusion of precipitation and prevent trash from blowing out of the receptacle.
6) For waste receptacles, which do not have lids and could leak, containers should be inspected regularly and controls (e.g., containment, spill response, etc.) shall be enacted whenever leaks or dry-weather discharges are observed.
7) Routinely inspect waste containers, roll-offs, compactors, and other waste receptacles for the presence of excessive waste accumulation and overflowing containers.
8) Ensure that wastes accumulating on the ground are placed in a suitable waste container.
9) Ensure that wastes are removed from the facility regularly by a licensed and contracted vendor.
10) Repair or replace damaged waste container lids.

Trash Compactors

1) Routinely inspect trash compactors for malfunctioning equipment or leaking hydraulic oil and provide the appropriate spill response if leaking equipment is encountered.
2) Regularly inspect compactors for leaking fluids and implement appropriate controls such as spill response/cleanup, collection or diversion of released fluids, providing secondary containment, etc. whenever leaks or dry-weather discharges are observed.

Scrap Metal Collection Containers

1) Avoid placing oily or grease-covered items in uncovered scrap metal recycling collection containers. If needed, wrap oily/greasy items in plastic garbage bags before placing them in the collection container.

Hazardous/Universal Wastes

1) Ensure that hazardous waste and universal wastes (e.g., batteries, bulbs, etc.) are collected and stored indoors or within covered collection containers.
2) Verify that hazardous/universal waste collection containers are in good condition, not leaking, and compatible with the wastes being stored.

Street Sweeping / Vactor Truck Material Storage

1) Do not site storage areas near storm drains, open water bodies, or areas of concentrated runoff.
2) Install sediment control devices (e.g. silt fence, silt socks, hay bales, etc.) around the staging area. Inspect these controls regularly and replace them as needed.
3) Cover the materials staging area, if feasible.
4) Provide oil-absorbent booms if necessary to control oily discharge. Inspect and replace booms regularly.
5) The staging area should be checked periodically for evidence of sediment migrating outside of the staging area. Material that has migrated out of the staging area should be promptly swept and returned to the staging area or disposed of.

Waste Cooking Oil/Grease

1) Maintain storage containers indoors or within a covered location, if feasible.
2) Storage containers shall be secured to prevent infiltration of precipitation and accidental/intentional spills or releases.
3) Carefully transfer waste oil/grease to the appropriate collection container to avoid spills.
4) Maintain suitable spill response equipment near collection containers. Immediately clean up any spilled oil/grease. Keep the exterior of the collection container clean and free of spilled oil/grease.
5) Provide secondary containment for collection containers, if feasible.

BMP Fact Sheet

VEHICLE AND EQUIPMENT STORAGE

GH-02

Not Applicable ☒ Applicable ☐

CONCERN

Vehicles and equipment may be stored onsite to support various County operations (e.g., construction, maintenance, snow removal, roadside assistance, mass transit, mowing, etc.). Examples of County owned and operated vehicles and equipment stored onsite at any given time include but are not limited to, the following: cars, trucks, buses, emergency response vehicles, garbage trucks, heavy equipment (backhoes, frontend loaders, etc.), forklifts, towable generators, portable light stands, and roadside equipment. Vehicle and equipment storage is considered a pollutant source due to the potential for incidental releases of petroleum products, lubricants, and various automotive fluids.

POLLUTION PREVENTION MEASURES

1) When possible/practical, store vehicles and equipment inside or under cover to prevent exposure to precipitation.
2) If vehicles or equipment must be stored outside, store vehicles/equipment in designated areas away from areas of concentrated runoff, storm drains, and other stormwater conveyances.
3) Vehicles and equipment shall be staged on impervious (asphalt or concrete) surfaces;
4) Keep truck beds clean and ensure potential stormwater pollutants are stored in closed containers, covered, or otherwise protected from stormwater exposure.
5) Conduct routine visual inspections of vehicles and equipment for the presence of leaks and respond accordingly.
6) Leaking vehicles/equipment should be moved inside or under cover. At a minimum, drip pans or absorbent pads shall be used to contain the leak until the vehicle/equipment can be relocated and the leak addressed.
7) Drain all fluids from wrecked or heavily damaged vehicles and equipment before storage.
8) Have an adequate supply of appropriate spill response equipment readily available and clean up all spills and leaks immediately utilizing dry cleaning techniques (e.g. absorbents and brooms).
9) Train staff in spill response so that incidents are addressed in a timely fashion.
10) Do not wash down areas where leaks have collected on ground surfaces; use dry cleaning methods such as granular absorbents and brooms.

VEHICLE AND EQUIPMENT REFUELING

Not Applicable ☒ Applicable ☐

CONCERN

Refueling activities associated with County vehicles and equipment can result in a discharge of fuel (gasoline and diesel fuel), which has the potential to enter the storm drain system and/or a nearby waterway. Such releases can introduce hydrocarbons, metals, and other toxic chemicals to stormwater runoff.

POLLUTION PREVENTION MEASURES

General Procedures *(applicable to all refueling activities)*

1) Routinely *(at least daily)* inspect the fuel dispensing area for any spills or leaks.
2) Routinely inspect fuel dispensing equipment looking for leaking or damaged equipment. Damaged or malfunctioning equipment shall be taken out of service until it has been repaired.
3) Fuels will only be dispensed into authorized vehicles, equipment, and approved containers.
4) Vehicle operators must remain outside of their vehicles and in attendance of fuel dispensers at all times while dispensing fuel.
5) Third-party contractors must be trained in proper refueling procedures and pollution prevention.
6) Do not utilize a foreign object to keep the dispenser nozzle in the open position. If present, a "hold-open" latch on the nozzle may be used.
7) Do not "top off" a vehicle's fuel tank once the dispenser nozzle's automatic shut-off has been activated. Topping off tanks may result in spills. Post signs in fueling areas warning vehicle operators against "topping off" of vehicle fuel tanks.
8) After refueling has stopped, allow several seconds to pass before removing the nozzle and returning it to the dispenser. This will prevent incidental dripping from the nozzle.
9) Employees refueling vehicles shall note the location of the "Emergency Fuel Shut Off" switch, to be used to stop the flow of fuel to the dispensers in the event of a release or emergency.
10) Have an adequate supply of appropriate spill response equipment readily available and clean up all spills immediately utilizing dry cleaning techniques (e.g. absorbents and brooms).
11) Immediately clean up and dispose of used absorbent material.
12) Do not wash down fueling areas; use dry cleaning methods such as granular absorbents and brooms.
13) Conduct refueling activities over impervious (e.g. concrete) surfaces. Place drip pans or absorbent pads under the nozzle if fueling occurs over a permeable surface such as grass or soil.
14) Install oil control devices in storm drains that may receive contaminated runoff from fueling areas.
15) Cover fueling areas with a canopy or roof to prevent direct contact with rainfall. Direct run-on away from fueling areas and collect fueling area run-off in a dead-end sump or oil-water separator.

Mobile Equipment Refueling

1) Refuel equipment on an impervious surface, downgradient of, and at the farthest practical distance from any storm drain, stormwater conveyance, stormwater management feature, or waterway.
2) Utilize secondary containment when refueling equipment (when practical).
3) Ensure mobile refuelers are parked in designated locations and away from areas of concentrated run-off, storm drains, and other stormwater conveyances.
4) Ensure that procedures are in place and that staff is properly trained in spill response/cleanup so that leaks and spills are addressed appropriately and promptly.

BMP Fact Sheet

VEHICLE MAINTENANCE

GH-04

Not Applicable ☒ Applicable ☐

CONCERN

Vehicle and equipment maintenance can impact the water quality of nearby waterways by exposing stormwater to various pollutants including petroleum hydrocarbons, solvents, antifreeze/coolants, used oil, lubricating oil, grease, brake fluid, metals, and various chemicals. Additionally, vehicles that are wrecked or awaiting repair can be a source of pollution if leaking fluids are not properly controlled.

POLLUTION PREVENTION MEASURES

1) Conduct vehicle and equipment maintenance activities indoors.
2) Make sure incoming vehicles and equipment are inspected for leaking fluids and oil.
3) Move leaking vehicles or equipment indoors or under cover as soon as possible. At a minimum, a drip pan or absorbent pads shall be utilized to contain the leak until the vehicle/equipment can be relocated and the leak addressed.
4) Avoid performing maintenance on vehicles in close proximity to exterior doorways, which may allow released fluids to migrate outdoors.
5) Have an adequate supply of appropriate spill response equipment readily available and clean up all spills and leaks immediately utilizing dry cleaning techniques (e.g. absorbents and brooms).
6) Keep maintenance areas neat and well organized. Remove dirt, debris, and used absorbent regularly.
7) Inspect maintenance areas as well as maintenance equipment on a routine basis.
8) Store vehicles, parts, and generated wastes indoors or off the ground and under cover whenever possible. When practical, provide secondary containment.
9) Promptly transfer used fluids to the proper waste container; do not leave full drip pans or other open containers around the shop. Empty and clean drip pans and containers regularly.
10) Waste liquids shall not be poured into floor drains, sinks, outdoor storm drain inlets, or other storm drains or sewer connections. Liquid wastes are to be collected in properly labeled containers and disposed of by a licensed waste hauler or other appropriate method.
11) Store leaking batteries in a sealed container and provide secondary containment, if feasible.
12) Clean all parts indoors utilizing a self-contained parts washer.
13) Do not hose down indoor service areas to storm drains or areas where it can seep into groundwater.
14) Maintain floor drains in good working order and inspect for proper function on a routine basis. Consider plugging floor drains that discharge to the storm sewer.
15) Ensure oil/water separators (if present) are maintained in proper working order and are checked on a routine basis for the presence of oil.
16) If maintenance work must be performed outdoors, adhere to the following requirements:
    - Conduct maintenance activities over an impervious surface, away from stormwater inlets.
    - Cover outdoor maintenance areas and direct stormwater run-on away from the area.
    - Use drip pans or drop cloths underneath the equipment to catch leaks and drips.
    - Have an adequate supply of appropriate spill response equipment readily available.
    - Clean all spills immediately using dry cleaning techniques (e.g. absorbents and brooms).
    - Avoid performing maintenance activities during precipitation events.
    - Limit temporary outdoor maintenance activities to a single shift/day if additional time is needed to cover the work area at the end of each day/shift.

VEHICLE AND EQUIPMENT WASHING

Not Applicable ☒ Applicable ☐

CONCERN

Vehicle and equipment washing can generate washwater that contains oil, grease, organic compounds, surfactants, phosphates, metals, and suspended solids. If vehicles/equipment are washed outdoors on impervious surfaces, dirty washwater can contaminate stormwater that ends up in waterways. Washing equipment over pervious surfaces can allow washwater to seep into the ground contaminating groundwater.

POLLUTION PREVENTION MEASURES

1) Vehicle and equipment washing should only be conducted in designated indoor wash bays that capture and recycle washwater to the extent practical.
2) Wastewater from the washing facility should be discharged to the sanitary sewer system under the authorization of a wastewater discharge permit issued by the local municipal authority.
3) The floor of indoor vehicle wash bays should be completely bermed or sloped to collect wash water and prevent migration outdoors.
4) No other activities (e.g., fluid changes, repairs, material storage) shall be performed in wash areas.
5) Keep the wash bay neat and well organized. Sweep or pick up all trash and debris daily or as needed.
6) Solid materials accumulated on vehicles or in vehicle beds (e.g. salt, soil, grass, etc.) shall be knocked off or otherwise removed from the vehicle (while inside the wash bay) prior to washing. Solid materials shall be collected and disposed of properly.
7) For vehicles too large to completely fit in the wash bays, only the portion of the vehicle physically located in the confines of the wash bay shall be cleaned. The vehicle shall then be rotated to allow for the remaining portion of the vehicle to be washed.
8) Use nozzles that automatically turn off water when not in use and consider high-pressure, low-volume sprays.
9) Avoid detergents as much as possible. If detergents are necessary, use a biodegradable, phosphate-free detergent.
10) If discharging to an oil-water separator, use a non-emulsifying detergent.
11) Inspect floor drain systems, holding tanks, and conveyances associated with designated wash areas regularly. Maintain oil/water separators and/or process flowthrough separators on a routine basis.
12) Use commercial car washes when vehicle or equipment washing cannot be performed onsite without causing impacts to stormwater.
13) If washing must occur onsite and outdoors, use a designated impervious area that is marked with posted signs indicating proper washing procedures. This area must be bermed to contain the wash water and graded to direct the wash water to the sanitary sewer, an oil-water separator, a holding tank, a dead-end sump, or other containment area. Captured water shall be disposed of properly.
14) Avoid steam cleaning and engine/undercarriage washing which can produce high pollutant concentrations. If steam cleaning or engine washing is necessary, perform such cleanings within isolated indoor areas, and ensure wash water is treated and discharged to the sanitary sewer (if permitted to do so) or captured for off-site disposal.
15) Train staff in proper washing techniques and how to confine washing to designated wash areas.
16) Consider alternatives to washing such as using air to blow grass and debris from small equipment, wet-wiping equipment with rags, etc.

BMP Fact Sheet

MATERIAL STORAGE

GH-06

Not Applicable ☒ Applicable ☐

CONCERN

The storage of petroleum products, chemicals, paints, cleaners, pesticides, fertilizers, bags of erodible materials like sand, cement, and soil, and other potential pollutants can negatively impact surface waters through the accidental releases or leaching of materials into stormwater. Unprotected outdoor storage areas can generate a wide range of stormwater pollutants, such as sediment, nutrients, toxic materials, and petroleum products.

POLLUTION PREVENTION MEASURES

1) Whenever possible, store containers (e.g. drums, bins, bags, cans, and totes) indoors or under cover to limit exposure to stormwater.
2) Designate specific areas for material delivery and storage that are away from heavy traffic areas, storm drains, stormwater conveyances, and areas of concentrated run-off.
3) Designated outdoor storage areas should be paved or consist of an impervious surface.
4) Provide secondary containment for materials whenever possible or required per regulation.
5) Store materials on pallets to prevent stormwater run-on from coming into contact with materials, prevent container corrosion, and allow for better leak detection. Pallets must be in good condition and promptly replaced once damaged or deteriorated.
6) Stack containers according to the manufacturer's recommendations to avoid damage.
7) Immediately replace damaged, corroded, or leaking containers.
8) Ensure all storage containers are clearly labeled with their contents.
9) Keep containers tightly sealed after use.
10) Maintain an accurate inventory of hazardous substances and limit on-site storage to that which is necessary to support facility operations.
11) Keep storage areas neat and well organized; remove debris and unneeded material promptly.
12) If empty drums are stored outdoors, ensure that all openings are equipped with caps to prevent water intrusion and that the drum/storage area is labeled "Empty Drums".
13) Have an adequate supply of appropriate spill response equipment readily available and clean up all spills and releases immediately utilizing dry cleaning techniques (e.g. sweeping/absorbents).
14) Clean up all migrating dry materials upon discovery and address the source of the release.
15) Provide perimeter controls (e.g., berms, rock check dams, etc.) for erodible stockpiles of materials such as mulch, sand, and gravel to prevent migration into the stormwater system.
16) Routinely inspect material storage areas for leaks, material migration, and damaged or corroded containers. Ensure that secondary containment and other perimeter controls are in satisfactory condition.
17) Additional visual inspections of outdoor storage areas should be conducted after significant rainfall events (i.e., greater than 0.5 inches).

BMP Fact Sheet

ABOVEGROUND STORAGE TANKS

GH-07

Not Applicable ☒ Applicable ☐

CONCERN

Aboveground storage tanks (ASTs) may be used to store fuels, automotive fluids, chemicals, or deicing fluids. Leaks from tanks, piping, or other equipment and releases during fluid transfers can all impact stormwater quality. It is critical to maintain ASTs in good working condition to prevent spills and/or releases from occurring. Improperly managed storage tanks can cause significant environmental impacts.

POLLUTION PREVENTION MEASURES

General *(applicable to all storage tanks)*

1) ASTs should be installed and maintained in accordance with COMAR 26.10 and applicable fire codes.
2) ASTs should be provided with secondary containment, whenever feasible or required by regulation.
3) Secondary containment areas shall be maintained clean and dry; drain valves must be kept closed; accumulated liquid shall only be discharged if there are no visible signs of impacts, and in accordance with applicable regulations.
4) Inspect ASTs monthly to identify any leaking or malfunctioning equipment and ensure tanks are functioning as designed.
5) ASTs shall be equipped with a form of liquid-level detection (i.e. sight gauge, electronic monitoring).
6) ASTs shall be equipped with overfill prevention (i.e. overfill alarm and/or overfill prevention valve).
7) Tanks and piping should be protected from vehicle impact via barriers, bollards, guard rails, etc.
8) Install ASTs on solid foundations over impervious surfaces, and away from areas of concentrated run-off, storm drains, and other stormwater conveyances.
9) Properly label all storage tanks (e.g., contents, capacity, etc.).
10) Keep remote fills and fill port spill buckets clean and dry.
11) Keep fill ports, gates, and tank areas secured when not in use to prevent fuel theft and tampering.
12) Have an adequate supply of appropriate spill response equipment readily available and clean up all spills and leaks immediately utilizing dry cleaning techniques (e.g. absorbents and brooms).
13) Facilities that maintain 1,320 gallons or more of aboveground oil products shall prepare and implement a Spill Prevention, Control, and Countermeasure (SPCC) Plan, per 40 CFR 112.
14) Facilities that maintain 1,000 gallons or more of used oil or 10,000 gallons or more of virgin oil in ASTs shall obtain an Individual Oil Operations Permit from the MDE, per COMAR 26.10.01.09.
15) Owners/Operators of facilities that maintain more than 2,500 gallons of oil in ASTs are required to register each AST with MDE, per COMAR 26.10.01.10.

Bulk Fluid Transfers (Deliveries)

1) All bulk fluid transfer operations shall be performed under the direct supervision of knowledgeable County personnel. At no time shall the delivery vehicle or delivery vehicle operator be unsupervised.
2) The product level within the tank must be measured and available capacity verified before delivery.
3) Deliveries shall be made via fill ports equipped with catch basins to capture drips and spills.
4) Ensure an adequate supply of appropriate spill response equipment is readily available.
5) Post signs in delivery area displaying proper delivery procedures and emergency contact information.

ABOVEGROUND STORAGE TANKS

Used Oil Tanks

1) County personnel must verify the level of product in used oil tanks prior to filling.
2) Used oil tanks should only be filled via designated fill ports. Pumping used oil into the tank via a closed piping system is preferred to manually pouring used oil into the tank.

Brine Tanks

1) If multiple tanks are located onsite, the tanks should be plumbed to ensure that the complete failure of one tank will not drain all the tanks in the system (tanks must be isolated).
2) Minimize seeping and leaking at fittings by properly supporting piping and fittings, using flexible connectors or hoses to reduce stress, and installing corrosion-resistant fittings.
3) Consider placing hoses in non-permeable trenches or using drip-less nozzles to reduce repeated small spills.

RESIDENT DROP-OFF CENTER

Not Applicable ☐ Applicable ☒

CONCERN

Resident Drop-Off Centers are publicly accessible facilities where residents can drop off used automotive fluids (i.e. oil or antifreeze), municipal waste, recyclable, and/or organic waste, typically free of charge. Improper transfer or management of the waste materials can allow a number of pollutants including oils and greases, toxic and chemical compounds, nutrients, metals, and other wastes to enter waterways.

POLLUTION PREVENTION MEASURES

General *(applicable to all materials collected)*

1) Clearly identify waste materials accepted by the facility, and clearly mark designated collection areas.
2) Waste material should be inspected by a County representative, prior to disposal.
3) Avoid positioning waste receptacles near storm drains, water bodies, or areas of concentrated runoff.
4) When practical, receiving areas should be covered.
5) Do not allow containers to overflow or waste materials to accumulate on the ground.

Automotive Fluid Collection

1) Used oil, antifreeze, and automotive fluid receiving areas should be on impervious surfaces, covered, and provided with secondary containment, which shall be maintained clean and dry.
2) Provide lidded waste receptacles in the receiving area for the public to dispose of empty containers. Waste receptacles shall be emptied routinely and waste disposed of properly.
3) Collection areas shall be inspected daily and all trash and spilled liquids appropriately cleaned up.
4) The available capacity of waste liquid collection containers shall be routinely verified and waste removals scheduled, as needed.
5) Install appropriate controls to prohibit the overfilling of waste fluid collection containers.
6) Place appropriate spill response equipment in close proximity to drop-off areas.
7) If aboveground tanks are used to collect waste fluids, refer to BMP Fact Sheet GHP-07 (Aboveground Storage Tanks) for additional recommendations.

Organic Debris Collection

1) Routinely transfer collected organic debris/waste to a composting or disposal facility.
2) Do not permit composting of organic waste except at properly designed and permitted facilities.
3) Enact controls to prevent leaves and other windblown debris from entering stormwater inlets.

Municipal Waste / Recyclables Collection

1) Refer to BMP Fact Sheet GHP-01 (Waste Management) for additional recommendations.

STOCKPILES

GH-09

Not Applicable ☐ Applicable ☒

CONCERN

The County may stockpile various erodible materials, the type of material can vary depending on the needs of the County. Stockpiled material may include soil, sand, millings, slag, cinders, sawdust, landscaping bark, compost, etc. Exposed stockpiles can easily erode due to wind or precipitation and contribute suspended solids to stormwater runoff.

POLLUTION PREVENTION MEASURES

1) Maintain stockpiles of erodible materials within roofed storage buildings or covered storage bins, if feasible. If not, stockpile material on an impervious surface and cover the stockpile.
2) Temporary stockpiles should be placed on an impermeable membrane (tarp) for quick clean-up.
3) Locate stockpiles away from drain inlets, catch basins, swales, areas of concentrated stormwater flow, water bodies, and environmentally sensitive areas.
4) Divert stormwater flows away from/around the stockpiles using a diversion device (e.g., temporary swale, berm, sandbags, or diversion fence).
5) Cover temporary stockpiles of erodible materials with a tarp that has been adequately secured. The covers must be in place at all times when the stockpile is not in active use.
6) When accessing a portion of the stockpile, only remove a section of the cover to minimize exposure to the elements.
7) Use barriers to isolate stockpiled materials from high-traffic areas to prevent tracking of materials.
8) Sweep (do not wash or hose down) in front of material stockpile storage areas at regular intervals, following loading and unloading activities, and during times of heavy use.
9) If material is observed migrating from the stockpile, clean up all migrated material upon discovery and provide additional controls to reduce migration from the stockpile. If such measures are ineffective implement controls to capture pollutants before they migrate off-site (e.g. silt fencing, inlet filters, filter socks, at-grade inlet protection, etc.).
10) Minimize material stockpile inventory based on historical inventory/usage records and public safety operational needs.
11) Cold mix asphalt shall be stored on and covered with plastic sheeting or comparable material.
12) Routinely inspect outdoor material stockpiles to verify existing controls are functioning properly and for signs of erosion or material transport.

BMP Fact Sheet

DEICING MATERIALS

GH-10

Not Applicable ☐ Applicable ☒

CONCERN

When salt and other de-icing materials are stored outside and uncovered, they have a much higher risk of being eroded and transported offsite by stormwater. Improper de-icing material and sand storage may result in stormwater runoff containing elevated concentrations of sodium chloride and dissolved solids. Sodium chloride (e.g., road salt) is an effective deicer but can be highly corrosive to stormwater facilities. Smaller waterways are at a higher risk to increases in salinity, which can threaten aquatic species. Additionally, runoff containing sodium chloride has the potential to reach drinking water sources where small traces can adversely impact public health.

POLLUTION PREVENTION MEASURES

1) Bagged de-icing chemicals must be stored indoors. If stored outdoors bags must be kept on pallets (off the ground) and covered at all times. Bags must be intact without holes or openings.
2) Bulk de-icing materials shall be stored under cover and on an impervious surface.
3) Bulk salt storage areas/buildings shall not be overfilled so that salt spills out beyond the entrance of the storage area/building.
4) Bulk salt storage areas/buildings shall be maintained in a structurally sound condition and in a way that prevents the release of salt and the infiltration of stormwater. Deicing materials should not touch the sides of metal storage containers.
5) Barriers such as berms, gates, knee walls, tarps, and/or straw bales shall be placed at the entrances of bulk salt storage areas/buildings to prohibit the migration of salt and prevent contact with precipitation/stormwater runoff.
6) Routinely inspect storage areas for migrating materials or deterioration of containment structures. Sweep up all migrating materials upon discovery and repair the source of the migrating pollutant.
7) Loading areas should be constructed of impervious material and covered or enclosed, to the extent practical, to reduce potential contact with stormwater.
8) Minimize the distance de-icing materials are transported during loading/unloading activities.
9) Prevent and/or minimize the spillage of salt and de-icing materials during loading/unloading activities, immediately clean spilled or tracked materials.
10) Sweeping of storage and loading/unloading areas shall be conducted immediately following loading/unloading activities.
11) Do not store de-icing materials (bulk or bagged) over or immediately adjacent to drains or waterways.
12) Control site drainage by diverting stormwater run-on away from storage/loading areas using appropriate measures (e.g., curbing, berms, etc.).
13) Slope storage/loading areas to direct salt-contaminated runoff to an appropriate collection area, and in a manner that prevents the runoff from reaching adjacent soil or surface waters.
14) Excess salt shall be removed from salt handling equipment (trucks, spreaders, etc.) following use/prior to storage. All cleaning shall occur on an impervious surface, which is sloped or curbed to contain any washwater and direct it to a collection area for recycling or proper disposal.

Appendix A

GHP Site Inspection Checklist

GOOD HOUSEKEEPING PLAN (GHP)
SITE INSPECTION CHECKLIST

Facility Name: _____ **Inspection Date:** _____

Inspector Name: _____ **Inspector Signature:** _____

- The intent of this inspection is to ensure that the site is being properly maintained and that there are no visible signs of pollutants entering the stormwater system.
- **A shaded status box designates an item in a non-compliant status. Please provide an explanation for all non-compliant items and subsequently document all corrective actions performed.**
- Retain the completed checklists for five (5) years.

Item	Status			CORRECTIVE ACTIONS/COMMENTS *Items which cannot be corrected immediately must be reported to the GHP/NPDES Program Manager*
	Yes	No	N/A	
GENERAL HOUSEKEEPING				
1. Are exterior areas of the facility free of accumulated trash, debris, and unneeded materials?				
2. Are stormwater drains and inlets free from debris, sediment, and evidence of spills/releases?				
3. Is the facility free from signs of erosion?				
4. Are paved surfaces free of accumulated sediment?				
5. Is spill response equipment available in maintenance areas, fueling areas, hazardous material storage areas, and/or other required areas?				
6. Are spill kits and absorbent materials clearly labeled and accessible (i.e. items are not piled on top of or in front of spill kits)?				
7. Are spill kits secured from being stolen or misused?				
8. Is there a labeled container present for the disposal of used spill cleanup material?				

GOOD HOUSEKEEPING PLAN (GHP)
SITE INSPECTION CHECKLIST

Item	Status			CORRECTIVE ACTIONS/COMMENTS *Items which cannot be corrected immediately must be reported to the GHP/NPDES Program Manager*
	Yes	No	N/A	
9. Does spill response equipment (i.e. spill kits, absorbent materials) need to be replenished?				
WASTE MANAGEMENT				
10. Are areas around solid waste containers/roll-offs/compactors free of excessive trash accumulation or overflowing containers?				
11. Are areas around solid waste containers/roll-offs/compactors free of visible evidence (i.e. leaks, staining) of ongoing stormwater pollution?				
12. Are scrap metal containers in good order and free from evidence of leaking oil/grease?				
13. For dumpsters, roll-offs, and other waste receptacles, where leaks are observed, have appropriate controls (e.g. containment, spill response, etc.) been enacted?				
14. Are the lids (if present) to solid waste containers closed?				
15. Is street sweeping/vactor waste being managed appropriately (i.e. no evidence of material migration)?				
16. Is waste cooking grease managed appropriately (i.e. no evidence of spilled material or excessive staining)?				
VEHICLE & EQUIPMENT STORAGE				
17. Are stored vehicles/equipment free from leaks?				
18. If leaks are present, are they being managed appropriately (drip pan or other methods in place to capture released liquids)?				
19. Are storage areas free of visible evidence of chronic leaks/spills (i.e. significant staining)?				

GOOD HOUSEKEEPING PLAN (GHP)
SITE INSPECTION CHECKLIST

Item	Status			CORRECTIVE ACTIONS/COMMENTS *Items which cannot be corrected immediately must be reported to the GHP/NPDES Program Manager*
	Yes	No	N/A	
VEHICLE & EQUIPMENT REFUELING				
20. Are the areas around refueling areas free from evidence of spills or leaks?				
21. Are refueling areas free of used absorbent material that has not been swept/cleaned up?				
22. Do fuel dispensers and hoses appear to be in good working order and well-maintained?				
VEHICLE MAINTENANCE				
23. Is there any indication that vehicle maintenance activities are being conducted outdoors?				
24. Is there any indication that vehicle maintenance activities are contributing to stormwater pollution?				
VEHICLE & EQUIPMENT WASHING				
25. If performed on-site, does all vehicle/equipment washing occur indoors?				
26. Is wash water collected and disposed of properly?				
27. Is there any indication that vehicle/equipment wash water is being released to stormwater conveyances or pervious areas?				
MATERIAL STORAGE				
28. Are all outdoor storage areas free from visible signs of leaks or spilled material?				
29. Are material storage containers in good condition?				

GOOD HOUSEKEEPING PLAN (GHP)
SITE INSPECTION CHECKLIST

Item	Status			CORRECTIVE ACTIONS/COMMENTS *Items which cannot be corrected immediately must be reported to the GHP/NPDES Program Manager*
	Yes	No	N/A	
30. Are drums, totes, and other containers (that are <u>not</u> empty) stored off the ground and covered, or stored indoors?				
31. Are liquid-containing drums/totes located outdoors provided with secondary containment?				
32. Are containers that are located outdoors equipped with closed lids except when material transfers are occurring?				
33. Are materials, which could impact stormwater, stored away from heavy traffic areas, or protected from vehicle collisions?				
34. Are chemical storage containers properly labeled?				
35. If empty drums are stored outside, are all openings equipped with caps to prevent water intrusion?				
ABOVEGROUND STORAGE TANKS				
36. Are all storage tanks, and surrounding areas free from visible signs of leaks or spilled material?				
37. Do storage tanks appear to be in good working order (e.g. free of obvious signs of damage or malfunctioning equipment)?				
38. Are remote fills associated with tanks free of liquid and debris?				
RESIDENT DROP-OFF CENTERS				
39. Are waste collection areas clearly identified?				
40. Are used oil/antifreeze collection tanks, containment structures, and surrounding areas free from visible signs of leaks or spilled material?				

GOOD HOUSEKEEPING PLAN (GHP)
SITE INSPECTION CHECKLIST

Item	Status			CORRECTIVE ACTIONS/COMMENTS *Items which cannot be corrected immediately must be reported to the GHP/NPDES Program Manager*
	Yes	No	N/A	
41. Do used oil/antifreeze collection tanks appear to be in good working order (e.g. free of obvious signs of damage or malfunctioning equipment)?				
42. Are empty used oil/antifreeze containers being collected and disposed of in the trash?				
43. Are areas around waste/recyclables containers free of excessive trash accumulation or overflowing containers?				
44. Are areas around waste/recyclables containers free of visible evidence (i.e. leaks, staining) of ongoing stormwater pollution?				
45. Are organic debris collection areas free of visible evidence of ongoing stormwater pollution (e.g. leaves and debris in stormwater conveyances)?				
STOCKPILES				
46. Are material piles, including salt, soil, sand, and millings isolated (i.e. covered, bermed, etc.) to prevent stormwater run-on and run-off?				
47. Are areas surrounding material piles (e.g. salt, soil, sand, millings, etc.) free of tracked or migrated material?				
DEICING MATERIALS				
48. Are all deicing materials stored indoors or undercover?				
49. Are salt storage structures in good condition (e.g. no evidence of material escaping or stormwater infiltration)?				
50. Is the salt loading area clean?				

GOOD HOUSEKEEPING PLAN (GHP)
SITE INSPECTION CHECKLIST

Item	Status			CORRECTIVE ACTIONS/COMMENTS *Items which cannot be corrected immediately must be reported to the GHP/NPDES Program Manager*
	Yes	No	N/A	
51. If deicing materials are tarped, is the tarp secure and covering the entire pile?				
52. Are bags of salt stored indoors, or off the ground and covered?				

ADDITIONAL COMMENTS:

Appendix B

GHP Stormwater Conveyance System Inspection Checklist

GOOD HOUSEKEEPING PLAN (GHP)
STORMWATER CONVEYANCE SYSTEM INSPECTION CHECKLIST

Facility Name: _____ **Inspection Date:** _____

Inspector Name: _____ **Inspector Signature:** _____

- The intent of this inspection is to ensure the free flow of stormwater within on-site conveyance systems and prevent damage/flooding.
- **If maintenance is needed, please provide an explanation, and document all corrective actions performed.**
- **Inspections shall include visually accessible infrastructure only; at no time shall inspection personnel enter a confined space.**
- Retain the completed checklists for five (5) years.

Item	Item Checked (Y/N/NA)	Maintenance Needed (Y/N)	CORRECTIVE ACTIONS/COMMENTS *Items which cannot be corrected immediately must be reported to the GHP/NPDES Program Manager*
CATCH BASINS / INLETS			
1. Look for debris and sediment blocking catch basin grates. If found, remove.			
2. Look for damage or cracks to the frame, grate, basin walls or bottom. If found, schedule repairs or replacement.			
3. Look for sediment and debris in the catch basin sump. If sediment fills 60% of the sump or comes within 6” of a pipe it should be scheduled for cleaning.			
4. If any type of filtering device is present, verify that the filter is not clogged, torn, or damaged; clean if clogged, replace if damaged.			
PIPES / CULVERTS			
5. Look for evidence of clogged piping (e.g. visual obstructions, standing water within manholes/inlets structures, etc.). If found, remove or schedule cleaning.			
6. Verify vegetation growth, if present, does not impede water flow. If it does, mow, cut back, or remove.			

GOOD HOUSEKEEPING PLAN (GHP)
STORMWATER CONVEYANCE SYSTEM INSPECTION CHECKLIST

Item	Item Checked (Y/N/NA)	Maintenance Needed (Y/N)	CORRECTIVE ACTIONS/COMMENTS *Items which cannot be corrected immediately must be reported to the GHP/NPDES Program Manager*
7. Inspect for damaged piping, inlets, outlets, headwalls, wingwalls, or excessive erosion. If found, make or schedule repairs.			
DITCHES / TRAPEZOIDAL SWALES			
8. Check for erosion, slumping, or undercutting. If found, make or schedule repairs.			
9. Look for trash and sediment accumulation. Remove all trash and remove sediment if it will impede water flow or clog downstream structures.			
10. Verify vegetation growth does not impede water flow. If it does, mow, cut back, or remove. Remove any trees or shrubs growing within the ditch.			
11. Check the integrity of check dams, filter socks, or other flow dissipation/filtering devices within the ditch or swale. Perform or schedule service if they are clogged, damaged, or deteriorated.			
12. Check inlets and outlets for debris accumulation, damage, or erosion. If found, make or schedule repairs.			

ADDITIONAL COMMENTS:

GUIDANCE DOCUMENT
GOOD HOUSEKEEPING PLAN - STORMWATER CONVEYANCE INSPECTIONS

INTRODUCTION

Maintaining catch basins, stormwater inlets, and other stormwater conveyance structures on a regular basis will remove pollutants, prevent backups, and ensure the system functions as intended to avoid flooding.

Each GHP-covered facility is required to conduct routine stormwater conveyance system inspections to ensure the free flow of stormwater within the conveyance system(s). The GHP includes a *"GHP Stormwater Conveyance System Inspection Checklist"*, to be used when completing the required inspections. This document provides additional background and guidance to aid facility personnel in completing the inspections.

CATCH BASINS / INLETS

Catch basins and inlets are all points for stormwater to enter storm drain systems. These structures are typically part of a larger conveyance system with many interconnected components where the impairment of one component can compromise the functionality of the larger system. Inlets and catch basins are subject to functional impairment by a variety of conditions, including:

- Structural damage including from vehicles and plows
- Cracks/joint separation at piping (inlet and outlet) connections
- Leaking due to cracks and joint separation
- Missing or damaged grates and grate frames
- Corrosion
- Blockage caused by debris, sediment, vegetation, or other objects

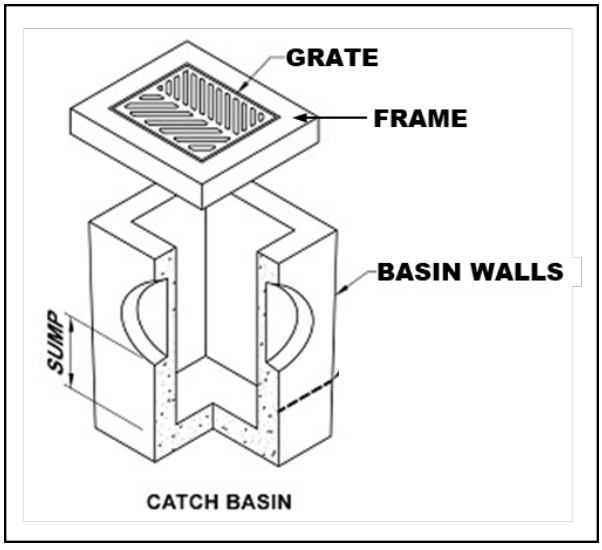

Figure 1 – Catch Basin Diagram

The following photos provide additional information related to the various inspection items, including examples of typical issues that may be encountered. The photo numbers correspond to the inspection checklist item number.

Inspection Item #1 [1]



Debris and sediment blocking inlet/catch basin grate.

Inspection Item #2 [2]



Damaged Grate

Inspection Item #2 [3]



Damaged Frame

Inspection Item #2 [4]



Failing brick walls with a stormwater inlet.

Inspection Item #2 [5]



Failing asphalt surrounding the inlet

[1] Grand Valley State University - https://www.gvsu.edu/groundswell/clogged-storm-drains-71.htm
[2] Georgia Department of Transportation – Stormwater System Inspection and Maintenance Manual, March 2020
[3] https://catchbasinauthority.ca/catch-basin-101/
[4] https://www.fixasphalt.com/catch-basin-repairs
[5] https://ccpia.org/catch-basin-and-manhole-inspections/

Inspection Item #3 [6]



Sediment and debris inside stormwater inlet

Inspection Item #3

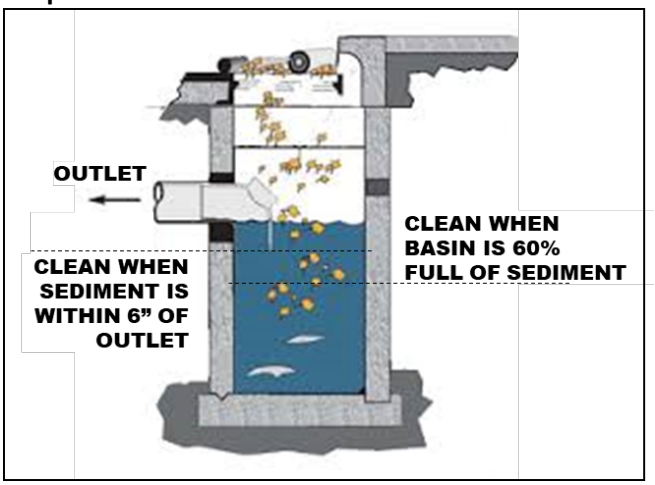

Remove sediment from a catch basin if it fills 60% of the sump or comes within 6" of a pipe.

Inspection Item #4 [7]



Example of inlet filter. Replace when filled or damaged.

Inspection Item #4 [8]



Example of an inlet filter sock, replace if damaged.

PIPES AND CULVERTS

Pipe systems are designed to convey stormwater runoff safely and effectively from inlets to various discharge points and outfalls. A culvert is a structure that channels water under an obstacle such as a roadway or railroad. These structures are subject to functional impairment by a variety of conditions, including:

- Blockage or obstruction due to build up of vegetation, debris, sediment, or other objects
- Cracks and/or joint separation
- Collapsed pipe
- Corrosion
- Root intrusion
- Lack of stabilization

[6] https://www.fixasphalt.com/catch-basin-repairs
[7] https://store.interstateproducts.com/products/Ultra-Drain-Guards/Ultra-Drain-Guard-Adjustable-Frame-Model
[8] https://www.newpig.com/pig-sediment-filter-sock/p/FLT787

Inspection Item #5 [9]



A pipe filled with sediment, inhibiting flow.

Inspection Item #5 [10]



Standing water around an inlet may indicate a blockage.

Inspection Item #6 [11]



Pipe conveyance filled with vegetation.

Inspection Item #7 [12]

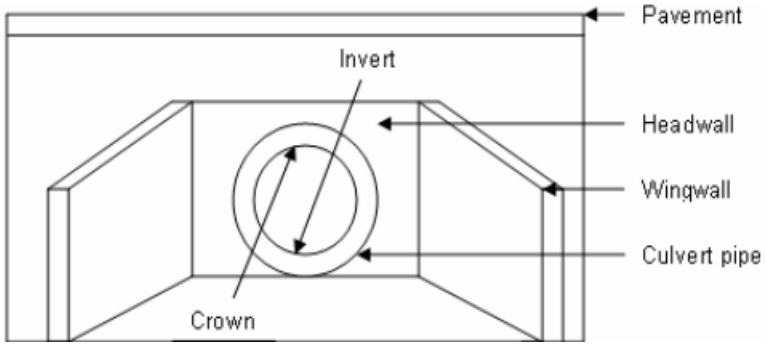

Diagram depicting various components of a culvert.

[9] Georgia Department of Transportation – Stormwater System Inspection and Maintenance Manual, March 2020
[10] https://www3.epa.gov/region9/water/npdes/stormwater-feature.html
[11] Georgia Department of Transportation – Stormwater System Inspection and Maintenance Manual, March 2020
[12] https://www.researchgate.net/figure/Components-of-a-Culvert_fig34_228685906

Inspection Item #7 [13]



A crack is the culvert headwall.

Inspection Item #7 [14]



Evidence of erosion around a culvert.

DITCHES AND SWALES

Ditches and swales serve similar functions. Both are used to convey stormwater. However, there are slight differences. A ditch is a narrow channel typically found along roads and at the edges of parking lots/driveways. A swale is like a ditch, but it is broad and shallow, and usually covered or lined with turfgrass or stone. Issues associated with these structures, which could impede their function include:

- Blockage or obstruction due to vegetation, debris, sediment, or other objects
- Erosion
- Rapidly moving water
- Lack of adequate vegetative cover for grass-lined channels

Inspection Item #8 [15]



Erosion and slumping within a drainage ditch.

Inspection Item #8 [16]



Slumping within a drainage swale.

[13] https://www.sbt-durabi.org/articles/xml/ARN0/
[14] https://lufkindailynews.com/news/local/culverts-crumbling-in-precinct-1/article_a9fed902-4379-5248-ab11-7471e2974298.html
[15] https://graniteseed.com/blog/how-to-stop-a-ditch-from-eroding/
[16] https://www.mnwcd.org/erosion-control

Inspection Item #9 [17]



Litter and debris within a ditch.

Inspection Item #9 [18]



Litter and debris within a swale.

Inspection Item #10 [19]



Cracks and joint separation in concrete channels, removal of vegetation may prevent future damage.

Inspection Item #11 [20]



Rock check dam across a channel.

Inspection Item #11 [21]



Filter sock check dams across a grass swale.

[17] https://craven.ces.ncsu.edu/2023/02/for-those-who-love-to-litter/
[18] https://www.cityoftulsa.org/government/departments/public-works/stormwater-quality/adopt-a-stream/
[19] Georgia Department of Transportation – Stormwater System Inspection and Maintenance Manual, March 2020
[20] EPA Stormwater Best Management Practice, Check Dams, December 2021
[21] EPA Stormwater Best Management Practice, Check Dams, December 2021

Inspection Item #12 [22]



Inlet to a rock-lined swale.

Inspection Item #12 [23]



Sediment accumulation at swale inlet.

END OF DOCUMENT

[22] https://www.stormwater.com/erosion-control/vegetation-management/article/13016118/inlet-protection-during-constructionand-after

[23] https://www.stormwater.com/erosion-control/vegetation-management/article/13016118/inlet-protection-during-constructionand-after

Appendix C

General Spill Response Procedures

SPILL RESPONSE AND NOTIFICATION PROCEDURES

A. Discovery of a Spill

1. Upon discovery of a spill, facility personnel should immediately assess the situation and determine if the spill is considered a "Minor" or "Major" spill. For a spill to be considered "Minor" all the following conditions must be satisfied:

    - ❖ The type of material spilled is known;
    - ❖ The spill is confined to the immediate work area;
    - ❖ The spill has not reached storm drains, sanitary sewer systems, open water, or surrounding soils;
    - ❖ The spill can be safely managed;
    - ❖ The employee can contain and clean up the spill with the PPE that is normally used in the work area;
    - ❖ The spill does not pose a serious threat of fire or an explosion; and
    - ❖ The spill does not pose conditions that are immediately dangerous to life or health.

2. If all the above conditions are met, the spill is considered "Minor". Refer to ***Section B*** of this document for appropriate response actions.

3. If all the above conditions are not met, then the spill is considered "Major". Refer to ***Section C*** of this document for appropriate response actions.

4. If a spill involves flammable liquids, ignitable vapors may be present - precautions must be taken to prevent ignition. Do not turn on or off equipment since sparks may be generated. Additionally, avoid the movement of equipment that could create static electricity. Larger spills of flammable liquids could pose a fire threat and would be considered a "Major" spill. Refer to ***Section C*** for appropriate actions.

B. Response to a "Minor" Spill

1. Identify the source of the spill and the direction in which the spill is heading.

2. Attempt to stop the spill at the source. Where applicable, the source of the spill shall be taken out of service until repairs can be made. If the spill is related to a fuel dispensing system, activate the Emergency Shut-Off (ESO) switch to prevent additional fuel disbursements.

3. If material is released outside a containment area, it is crucial that the material be contained as quickly as possible. Following proper safety procedures, use absorbent materials or diking to contain the spill. Prevent the spill from reaching storm drains, sanitary sewers, or open water. If a spill is flowing toward a drain, install temporary diking around the drain, block off the drain with a drain cover, or place absorbent material around the drain to prevent a discharge.

4. Once the spill has been stopped and contained, estimate the quantity of the spill. Consult applicable Safety Data Sheet (SDS) for material compatibility and environmental precautions. Note and follow recommendations regarding special precautions, spill response equipment, methods, or precautions. All cleanup work shall be conducted in accordance with existing safety protocols and SDS recommendations. Contact the facility Superintendent/Supervisor, or designee, for assistance if needed.

5. Recover or clean up the spilled material as much as possible. Material that cannot be reused must be discarded in accordance with state and federal regulations. Liquids absorbed by porous materials (e.g., wood, gravel, significant quantities of absorbent material, etc.) shall be placed into US DOT-approved 30-gallon or 55-gallon steel drums. Following cleanup, the container shall be secured and appropriately labeled to identify the contents and the date of the spill/cleanup. Containers shall be stored indoors and provided with secondary containment until transported off-site for disposal.

6. For spills that do not involve flammable liquids or other potential hazardous wastes, small quantities of used absorbent materials may be double bagged and disposed of along with municipal trash as long as all liquids have been absorbed (no free liquid may be present).

7. If the spilled material is a flammable liquid, corrosive liquid (pH ≤ 2 or ≥ 12.5), or other potential hazardous waste, all recovered product, impacted material, and used absorbent must be placed into a US DOT-approved containers/drums. Following cleanup, the container(s) shall be secured and appropriately labeled to identify the contents and the date of the spill/cleanup. Containers shall be stored indoors and provided with secondary containment until transported off-site for disposal. The facility Superintendent/ Supervisor, or designee shall be notified that a potential hazardous waste was released and that a waste characterization may be needed to facilitate proper disposal.

8. Surfaces that are contaminated by the spill shall be cleaned utilizing dry absorbent material. Tools and equipment that have been used in the cleanup must be decontaminated immediately after use. Decontamination water (if used) must be minimized, containerized, and disposed of properly.

9. If waste requires disposal, notify the facility Superintendent/Supervisor, or designee who will arrange for the proper characterization and disposal of any waste material. Representative sampling and analysis may be necessary to properly characterize the waste. The waste must be transported and disposed of in compliance with all applicable laws and regulations. Waste manifests, trip tickets, or bills of lading (if required) for waste disposal shall be kept on file.

10. Facility personnel shall restock/replace spill response equipment and absorbent materials used during the clean-up efforts.

11. The facility Superintendent/Supervisor, designee, or other appropriate County personnel shall be notified of the spill in accordance with ***Section D*** of this document.

C. Response to "Major" Spill

A "Major" spill is any discharge that does not meet the definition of a "Minor" spill. Any employee or contractor observing, being involved with, or recognizing a potential or actual spill of oil or other hazardous material, other than a "Minor" spill is responsible for performing the following actions:

1. If there is no danger to human health, attempt to stop and contain the spill at the source. If the spilled material is unknown, if PPE other than that which is typically used in your work area, is necessary to approach the spill area, or if assistance is required to stop the spill, do not attempt to contain the spill. If the spill is related to a fuel dispensing system, activate the Emergency Shut-Off (ESO) switch.

2. Most County employees lack the appropriate training to respond to "Major" spills. If the spill is of an unknown substance, is of a quantity that cannot be safely managed, or poses other risks beyond the training level of the employee, the employee should not attempt to contain or clean up the spill.

3. Evacuate individuals from the area and keep personnel away from the impacted area.

4. Immediately notify the facility Superintendent/Supervisor, or designee of the incident. The notified individual will determine the need for further evacuations and contact emergency response personnel (911), as necessary. *If a situation represents an immediate and grave danger to personnel, the public, structures, or other infrastructure, the individual discovering the incident may call 911 directly without first notifying facility management.*

5. The facility Superintendent/Supervisor or designee will determine if assistance from emergency response contractors is required to clean up the incident and will coordinate such spill response efforts with spill response contractors and other County agencies and first responders.

6. Facility personnel will provide assistance to emergency responders, as appropriate.

D. Reporting a Spill (Internal Notifications)

1. Once a spill is contained and cleanup operations have been initiated, the individual discovering the spill shall notify the appropriate County representatives and provide the following information:

    a) Identify the location, date, and time of the incident;
    b) Identify the type of material spilled or discharged;
    c) Estimate the quantity spilled and the rate of the spill;
    d) Identify the cause of the spill or discharge;
    e) Identify impacted media or infrastructure (soil, storm drains, open water bodies, etc.);
    f) Determine the extent of injuries involved; and
    g) Provide response measures implemented by the facility personnel.

E. Reporting a Spill (Regulatory Notifications)

State of Maryland Reporting Requirements (COMAR 26.10.01.05)

1. Upon discovery of a spill, the Responsible Person shall notify the MDE Emergency Response Division **within two (2) hours** by calling 866-633-4686. The caller shall be prepared to provide the following information:

    a) The time and date of the spill;
    b) The location and cause of the spill;
    c) The mode of transportation or type of facility involved;
    d) Type and quantity of oil spilled;
    e) Details regarding any assistance required;
    f) The name, address, and telephone number of the person making the report; and
    g) Any other pertinent information requested by the Department.

2. MDE will provide further guidance on additional responsibilities.

3. Within **ten (10) working days** of the completed removal and clean-up activities, the Responsible Person shall prepare a report using either County letterhead detailing the incident. The report shall contain the following:

    a) Date, time, and place of the spill;
    b) The amount and type of oil or hazardous substance spilled;
    c) A complete description of circumstances that contributed to the spill;
    d) A complete description of the containment and removal operations performed, including disposal sites to which oil refuse was transported;
    e) Procedures, methods, and precautions instituted to prevent the recurrence of an oil spill from the facility involved;
    f) Any other information considered necessary or required by the MDE for a complete description of the incident; and
    g) A certification that the information provided is true and correct to the knowledge of the person signing the report.

4. The completed report shall be submitted to mdeerd.mema@maryland.gov or faxed to 410-537-3932.

5. A digital copy of the completed report and any accompanying documentation shall be retained

Federal Reporting Requirements - National Response Center (40 CFR 110)

1. If any of the following criteria are met the Responsible Person shall notify the National Response Center (NRC) **within two (2) hours** of the spill discovery by calling 800-424-8802 or 202-426-2675.

    - ❖ The spill has caused a film, sheen, or discoloration of the surface water or shorelines;
    - ❖ The material spilled will violate applicable water quality standards (surface water or groundwater); or
    - ❖ The spill has caused a sludge or emulsion to be deposited beneath the surface of the water or on the shoreline.

2. At a minimum, the following information shall be provided to the NRC:

    a) Name, organization, and telephone number of reporting party;
    b) Name and address of the responsible party;
    c) Date, time, and location of the incident;
    d) Source and cause of the discharge;
    e) Type of material(s) discharged;
    f) Quantity of materials discharged;
    g) Danger or threat posed by discharge;
    h) Number and types of injuries (if any);
    i) Weather conditions at the incident location; and
    j) Other information to help emergency personnel respond to the incident.

3. If unable to report to the NRC, reports can be made to the EPA Regional Office at 800-438-2474 or the U.S. Coast Guard (USCG) at 202-372-1001. The NRC, EPA, or USCG will provide further guidance.

4. A digital record of the NRC notification and any accompanying documentation shall be retained on-site.

Federal Reporting Requirements - EPA Regional Administrator (40 CFR 112.4)

1. If the facility where the spill occurred is regulated under 40 CFR 112 and is required to have a Spill Prevention, Control, and Countermeasures (SPCC) Plan, the Responsible Person shall report the spill to the EPA Region III Administrator when any of the following criteria are met:

   - More than 1,000 gallons of oil is discharged to navigable waters or adjoining shorelines in a single incident; or
   - More than 42 gallons of oil is discharged to navigable waters or adjoining shorelines in each of two incidents occurring within any twelve-month period.

2. The report shall be made in writing **within 60 days** of the spill and shall contain:

   a) Name and location of the facility;
   b) Owner/operator name;
   c) Maximum storage/handling capacity of the facility and normal daily throughput;
   d) Corrective actions and countermeasures taken;
   e) Adequate description of the facility including maps, and flow diagrams;
   f) Cause of the discharge to navigable waters, including a failure analysis;
   g) Additional preventative measures taken or planned to minimize discharge reoccurrence; and
   h) Other information required by the EPA Regional III Administrator.

3. The report shall be submitted to the EPA Regional Administrator at the following address:

   EPA Regional Administrator
   US EPA Region 3
   1650 Arch Street (3RA00)
   Philadelphia, PA 19103-2029

4. A copy of the report shall be retained in the facility SPCC Plan.

Appendix D

Training Records

GOOD HOUSEKEEPING PLAN (GHP)
TRAINING ATTENDANCE LOG

FACILITY NAME: _____

DATE	NAME *(PRINT)*	SIGNATURE

By signing I affirm that I have completed the required annual training; and I am aware of and understand my responsibilities under this Plan.

GOOD HOUSEKEEPING PLAN (GHP)

Bill Bass Pumping Station
2 Kennard Avenue
Edgewood, MD 21040

June 30, 2025

TABLE OF CONTENTS

1.0 BACKGROUND & INTRODUCTION 1
1.1 Objectives 1
1.2 Potential Stormwater Pollutants 1
2.0 RESPONSIBILITIES 3
2.1 GHP Implementation 3
2.2 Plan Review and Modification 3
2.3 Inspections 3
2.3.1 GHP Site Inspections 3
2.3.2 Conveyance System Inspections 4
2.4 Training 4
3.0 BEST MANAGEMENT PRACTICES (BMPs) 5
3.1 Applicability of BMP Fact Sheets 5
3.2 BMP Fact Sheets 5

List of Tables

TABLE 1-1 POTENTIAL STORMWATER POLLUTANTS AND THEIR SOURCES 2

List of BMP Fact Sheets

GH-01 - Waste Management
GH-02 - Vehicle and Equipment Storage
GH-03 - Vehicle/Equipment Refueling
GH-04 - Vehicle Maintenance
GH-05 - Vehicle/Equipment Washing
GH-06 - Material Storage
GH-07 - Aboveground Storage Tanks
GH-08 - Resident Drop-Off Centers
GH-09 - Stockpiles
GH-10 - Deicing Materials

Appendices

Appendix A: GHP Site Inspection Checklist
Appendix B: GHP Stormwater Conveyance Inspection Checklist
Appendix C: General Spill Response Procedures
Appendix D: Training Records

List of Acronyms

AST	-	Aboveground Storage Tank
BMP	-	Best Management Practice
CFR	-	Code of Federal Regulations
GHP	-	Good Housekeeping Plan
MDE	-	Maryland Department of the Environment
MS4	-	Municipal Separate Storm Sewer System
NPDES	-	National Pollutant Discharge Elimination System
SPCC	-	Spill Prevention, Control, and Countermeasure Plan

1.0 BACKGROUND & INTRODUCTION

Polluted stormwater runoff has the potential to enter the County's storm sewer systems (referred to as a municipal separate storm sewer system or MS4), and then discharge, untreated, into local water bodies. To address this potential stormwater pollution, the County is required to obtain a NPDES permit from the Maryland Department of the Environment (MDE). The NPDES Permit requires the County to take actions to prevent stormwater pollution, maintain storm sewer systems, monitor stormwater discharges, and develop and implement comprehensive management programs to minimize the discharge of pollutants from the storm sewer system.

To comply with Part IV.D.4.b of the County's Phase I MS4 Permit, the County must develop, implement, and maintain a Good Housekeeping Plan (GHP) for certain County-owned properties not required to be covered under Maryland's General Permit for Discharges from Stormwater Associated with Industrial Activities *(General Permit 12-SWA / 20-SW).*

To support this effort, a *"Good Housekeeping Plan Applicability Certification"* has been developed to evaluate and document if a specific County-owned facility is subject to the GHP requirements. The *"GHP Applicability Certification"* includes the following ten (10) potential stormwater polluting activities. If any of the covered activities are performed at the facility, then that facility is required to implement a site-specific GHP. The GHP will include each of the potential stormwater polluting activities identified in the *"GHP Applicability Certification"* and corresponding pollution prevention procedures.

- Waste Management
- Vehicle and Equipment Storage
- Vehicle/Equipment Refueling
- Vehicle Maintenance
- Vehicle/Equipment Washing
- Material Storage
- Aboveground Storage Tanks
- Resident Drop-Off Center
- Stockpiles
- Deicing Materials

1.1 Objectives

The GHP was developed to outline suitable practices, procedures, and protocols, or Best Management Practices ("BMPs") for reducing and/or preventing stormwater pollution associated with operations at covered County-owned properties. The intent of the pollution prevention procedures included in the GHP is to limit the release of materials with the potential to impact stormwater, this includes reducing or eliminating (to the extent practical):

- The occurrence of spills and leaks;
- The accidental dumping or release of materials;
- The accumulation of waste, trash, debris, unused parts/equipment, etc.;
- The exposure of hazardous materials to precipitation/run-off;
- Stormwater run-off contamination by improperly stored materials; and/or
- Illicit discharges to the storm drain system.

1.2 Potential Stormwater Pollutants

Table 1-1 on the following page provides a list of common potential pollutants that may result from the GHP-regulated activities identified above. Understanding the sources of these pollutants can help in achieving the goals and objectives of the GHP program.

TABLE 1-1 POTENTIAL STORMWATER POLLUTANTS AND THEIR SOURCES

		Waste Management	Vehicle/Equipment Storage	Vehicle/Equipment Refueling	Vehicle Maintenance	Vehicle/Equipment Washing	Material Storage	Aboveground Storage Tanks	Resident Drop-Off Center	Stockpiles	Deicing Materials
Pollutants	**Sources**	**Associated GHP Activity**									
Sediment	Land disturbance; erosion; paved surfaces; material stockpiles; waste storage; salt/abrasive application	X				X	X		X	X	X
Hydrocarbons *(petroleum compounds)*	Leaking vehicle and equipment; vehicle and equipment cleaning; spills; improper storage; maintenance activities; scrap metal disposal; improper disposal	X	X	X	X	X	X	X	X		
Metals	Vehicle brake and tire wear; vehicle/equipment exhaust; batteries; galvanized metal; paint and wood preservatives; fuels, pesticides, and cleaners; vehicle fueling, maintenance, and washing; industrial waste	X	X	X	X	X	X	X	X		
Toxic Chemicals	Pesticide application; improper chemical storage; leaks and spills from storage containers; leaking vehicles; maintenance activities	X	X		X	X	X	X	X		
Chlorides	De-Icing chemicals										X
Trash/Debris	Improper waste storage and disposal; leaking trash containers; littering; poor housekeeping	X	X				X		X		
Nutrients (nitrogen and Phosphorus)	Fertilizers; malfunctioning septic systems; sewer overflows; animal/pet waste; vehicle washing; decaying grass and leaves; leaking trash containers; atmospheric deposition	X				X	X		X		

2.0 RESPONSIBILITIES

2.1 GHP Implementation

A separate GHP is required for each covered facility. The following individual *(identified by name and/or title)* is accountable for the administration and implementation of the GHP at this facility and has the authority to commit the necessary resources to implement this Plan.

_____

Name and/or Title of Responsible Person

The Responsible Person listed above shall ensure that facility personnel involved in any GHP-covered activities identified in this Plan, are provided with access to, and are familiar with, the contents of this Plan.

2.2 Plan Review and Modification

The *"GHP Applicability Certification"* completed for this facility must be reviewed and updated once every permit term, or within one (1) year of substantial changes to a facility's operations that could reasonably contribute to stormwater pollution. Any newly constructed/acquired facility must be assessed within one (1) year of initiating operations at the facility. The facility's GHP must be amended and reissued to the facility within one (1) year of any changes to the facility's *"GHP Applicability Certification"*.

When warranted, the BMP Fact Sheets provided in Section 3.0 may need to be updated or revised. At the same time, additional BMP Facts Sheets may be added. The need for such updates or modifications will be at the discretion of the County's GHP Program Administrator.

2.3 Inspections

The County's MS4 permit requires each facility covered by a GHP to have the following:

1. Written procedures for annually assessing County properties to prevent the discharge of pollutants, spills, and leaks into the County's storm sewer system; and

2. Written procedure for performing stormwater conveyance system inspections and for removing debris that may cause clogging, backups, and flooding.

To meet these requirements, each facility that is covered by a GHP will be required to complete routine site inspections and stormwater conveyance system inspections as detailed below. Facility management will be responsible for ensuring the necessary inspections are completed within the required timeframes, that corrective actions (if needed) are performed, and that records of inspections and completed corrective actions are maintained for at least five (5) years.

2.3.1 GHP Site Inspections

The GHP Site Inspection will be performed to ensure that each GHP-covered facility is being properly maintained and that there are no visible signs of pollutants entering the stormwater system. GHP facilities shall utilize the *"GHP Site Inspection Checklist"*, provided in ***Appendix A*** to complete the required inspection. At a minimum, each facility is to be inspected every five (5) years.

2.3.2 Conveyance System Inspections

Stormwater conveyance systems are generally comprised of curbs and gutters, catch basins, inlet structures, swales, channels, piping, culverts, detention ponds, outfalls, or other structures that are used to collect, contain, and convey stormwater runoff.

The unimpeded movement of stormwater through conveyance systems is critical in avoiding backups and flooding, which can impede facility operations and damage property. Routine inspections and preventative care of stormwater conveyance systems can ensure these systems function as intended and prevent the need for costly and time-consuming repairs and retrofits.

Each GHP-covered facility is required to conduct routine stormwater conveyance system inspections to ensure the free flow of stormwater within the conveyance systems. GHP-covered facilities shall utilize the *"GHP Stormwater Conveyance System Inspection Checklist"*, provided in ***Appendix B*** to complete the required inspections. At a minimum, facility conveyance system inspections are to be conducted every five (5) years.

2.4 Training

As part of the GHP requirements within the County's Phase I NPDES permit, annual training must be provided to all appropriate staff and contractors. Such training shall be provided to any individuals responsible for implementing the GHP, performing the required inspections, or involved in any of the GHP-covered activities identified in this Plan. The required training shall focus on the duties and responsibilities assigned to site personnel in implementing the GHP and the best management practices (BMPs) prescribed in this Plan for preventing, reducing, and eliminating the discharge of pollutants during facility activities.

The County's MS4/GHP Program Coordinator will be responsible for developing the required training and disseminating it to GHP-covered facilities. Each GHP-covered facility will be responsible for identifying staff/contractors who must attend annual training, ensuring identified staff complete the required training, and maintaining records that document training dates and attendees. Training records and other documentation shall be maintained in ***Appendix D*** of this Plan.

3.0 BEST MANAGEMENT PRACTICES (BMPs)

This section contains a BMP Fact Sheet for each of the ten (10) GHP-regulated activities. The County's operations are not limited to the BMPs contained within this document; nor is the County required to implement all of the pollution prevention measures identified within each BMP Fact Sheet. The County should select and implement those measures that are applicable and have the greatest potential for reducing stormwater pollution.

The BMP Fact Sheets contained within this document offer recommended protocols for a particular activity. These pollution prevention measures are considered non-structural BMPs with a focus on source control of potential pollutants.

3.1 Applicability of BMP Fact Sheets

The *"GHP Applicability Certification"* completed for this facility has identified the activities conducted at this facility that require coverage under this Plan. Each of the BMP Fact Sheets shall be marked as to whether they are applicable or not applicable to this facility. The Applicable/Not Applicable indicator on each BMP Fact Sheet can be revised in response to changes in operations at the facility.

3.2 BMP Fact Sheets

BMP Fact Sheets can be found on the following pages. For the sake of consistency, the general outline of a BMP Fact Sheet will be as follows:

- Identification of GHP-covered activity.
- Applicability of the BMP Fact Sheet to the facility.
- A general description of the concern the activity poses to stormwater.
- Recommended pollution prevention measures for reducing/eliminating stormwater pollution.
- Additional sources of information, if applicable.

WASTE MANAGEMENT

Not Applicable ☒ Applicable ☐

CONCERN

Improperly managed waste can allow trash and debris to be washed into storm drains which poses a concern to water quality, marine life, and public health. It also has the potential to create obstructions in the drainage system, which can lead to backups and flooding. Additionally, improper storage and handling of waste materials can allow pollutants including oils and greases, toxic and chemical compounds (including nutrients), bacteria, metals, and other potentially hazardous wastes to enter waterways.

POLLUTION PREVENTION MEASURES

General *(applicable to all waste management activities)*

1) Provide suitable containers, preferably with working covers, to collect waste materials.
2) Ensure that appropriate waste containers are available in areas where waste is generated.
3) Provide a cover over waste storage areas, if feasible.
4) Avoid positioning waste receptacles near storm drains, water bodies, or areas of concentrated runoff.
5) Ensure that lids to waste containers *(if present)* are kept closed to prevent the intrusion of precipitation and prevent trash from blowing out of the receptacle.
6) For waste receptacles, which do not have lids and could leak, containers should be inspected regularly and controls (e.g., containment, spill response, etc.) shall be enacted whenever leaks or dry-weather discharges are observed.
7) Routinely inspect waste containers, roll-offs, compactors, and other waste receptacles for the presence of excessive waste accumulation and overflowing containers.
8) Ensure that wastes accumulating on the ground are placed in a suitable waste container.
9) Ensure that wastes are removed from the facility regularly by a licensed and contracted vendor.
10) Repair or replace damaged waste container lids.

Trash Compactors

1) Routinely inspect trash compactors for malfunctioning equipment or leaking hydraulic oil and provide the appropriate spill response if leaking equipment is encountered.
2) Regularly inspect compactors for leaking fluids and implement appropriate controls such as spill response/cleanup, collection or diversion of released fluids, providing secondary containment, etc. whenever leaks or dry-weather discharges are observed.

Scrap Metal Collection Containers

1) Avoid placing oily or grease-covered items in uncovered scrap metal recycling collection containers. If needed, wrap oily/greasy items in plastic garbage bags before placing them in the collection container.

Hazardous/Universal Wastes

1) Ensure that hazardous waste and universal wastes (e.g., batteries, bulbs, etc.) are collected and stored indoors or within covered collection containers.
2) Verify that hazardous/universal waste collection containers are in good condition, not leaking, and compatible with the wastes being stored.

Street Sweeping / Vactor Truck Material Storage

1) Do not site storage areas near storm drains, open water bodies, or areas of concentrated runoff.
2) Install sediment control devices (e.g. silt fence, silt socks, hay bales, etc.) around the staging area. Inspect these controls regularly and replace them as needed.
3) Cover the materials staging area, if feasible.
4) Provide oil-absorbent booms if necessary to control oily discharge. Inspect and replace booms regularly.
5) The staging area should be checked periodically for evidence of sediment migrating outside of the staging area. Material that has migrated out of the staging area should be promptly swept and returned to the staging area or disposed of.

Waste Cooking Oil/Grease

1) Maintain storage containers indoors or within a covered location, if feasible.
2) Storage containers shall be secured to prevent infiltration of precipitation and accidental/intentional spills or releases.
3) Carefully transfer waste oil/grease to the appropriate collection container to avoid spills.
4) Maintain suitable spill response equipment near collection containers. Immediately clean up any spilled oil/grease. Keep the exterior of the collection container clean and free of spilled oil/grease.
5) Provide secondary containment for collection containers, if feasible.

VEHICLE AND EQUIPMENT STORAGE

Not Applicable ☒ Applicable ☐

CONCERN

Vehicles and equipment may be stored onsite to support various County operations (e.g., construction, maintenance, snow removal, roadside assistance, mass transit, mowing, etc.). Examples of County owned and operated vehicles and equipment stored onsite at any given time include but are not limited to, the following: cars, trucks, buses, emergency response vehicles, garbage trucks, heavy equipment (backhoes, frontend loaders, etc.), forklifts, towable generators, portable light stands, and roadside equipment. Vehicle and equipment storage is considered a pollutant source due to the potential for incidental releases of petroleum products, lubricants, and various automotive fluids.

POLLUTION PREVENTION MEASURES

1) When possible/practical, store vehicles and equipment inside or under cover to prevent exposure to precipitation.
2) If vehicles or equipment must be stored outside, store vehicles/equipment in designated areas away from areas of concentrated runoff, storm drains, and other stormwater conveyances.
3) Vehicles and equipment shall be staged on impervious (asphalt or concrete) surfaces;
4) Keep truck beds clean and ensure potential stormwater pollutants are stored in closed containers, covered, or otherwise protected from stormwater exposure.
5) Conduct routine visual inspections of vehicles and equipment for the presence of leaks and respond accordingly.
6) Leaking vehicles/equipment should be moved inside or under cover. At a minimum, drip pans or absorbent pads shall be used to contain the leak until the vehicle/equipment can be relocated and the leak addressed.
7) Drain all fluids from wrecked or heavily damaged vehicles and equipment before storage.
8) Have an adequate supply of appropriate spill response equipment readily available and clean up all spills and leaks immediately utilizing dry cleaning techniques (e.g. absorbents and brooms).
9) Train staff in spill response so that incidents are addressed in a timely fashion.
10) Do not wash down areas where leaks have collected on ground surfaces; use dry cleaning methods such as granular absorbents and brooms.

VEHICLE AND EQUIPMENT REFUELING

Not Applicable ☒ Applicable ☐

CONCERN

Refueling activities associated with County vehicles and equipment can result in a discharge of fuel (gasoline and diesel fuel), which has the potential to enter the storm drain system and/or a nearby waterway. Such releases can introduce hydrocarbons, metals, and other toxic chemicals to stormwater runoff.

POLLUTION PREVENTION MEASURES

General Procedures *(applicable to all refueling activities)*

1) Routinely *(at least daily)* inspect the fuel dispensing area for any spills or leaks.
2) Routinely inspect fuel dispensing equipment looking for leaking or damaged equipment. Damaged or malfunctioning equipment shall be taken out of service until it has been repaired.
3) Fuels will only be dispensed into authorized vehicles, equipment, and approved containers.
4) Vehicle operators must remain outside of their vehicles and in attendance of fuel dispensers at all times while dispensing fuel.
5) Third-party contractors must be trained in proper refueling procedures and pollution prevention.
6) Do not utilize a foreign object to keep the dispenser nozzle in the open position. If present, a “hold-open” latch on the nozzle may be used.
7) Do not “top off” a vehicle’s fuel tank once the dispenser nozzle’s automatic shut-off has been activated. Topping off tanks may result in spills. Post signs in fueling areas warning vehicle operators against "topping off" of vehicle fuel tanks.
8) After refueling has stopped, allow several seconds to pass before removing the nozzle and returning it to the dispenser. This will prevent incidental dripping from the nozzle.
9) Employees refueling vehicles shall note the location of the “Emergency Fuel Shut Off” switch, to be used to stop the flow of fuel to the dispensers in the event of a release or emergency.
10) Have an adequate supply of appropriate spill response equipment readily available and clean up all spills immediately utilizing dry cleaning techniques (e.g. absorbents and brooms).
11) Immediately clean up and dispose of used absorbent material.
12) Do not wash down fueling areas; use dry cleaning methods such as granular absorbents and brooms.
13) Conduct refueling activities over impervious (e.g. concrete) surfaces. Place drip pans or absorbent pads under the nozzle if fueling occurs over a permeable surface such as grass or soil.
14) Install oil control devices in storm drains that may receive contaminated runoff from fueling areas.
15) Cover fueling areas with a canopy or roof to prevent direct contact with rainfall. Direct run-on away from fueling areas and collect fueling area run-off in a dead-end sump or oil-water separator.

Mobile Equipment Refueling

1) Refuel equipment on an impervious surface, downgradient of, and at the farthest practical distance from any storm drain, stormwater conveyance, stormwater management feature, or waterway.
2) Utilize secondary containment when refueling equipment (when practical).
3) Ensure mobile refuelers are parked in designated locations and away from areas of concentrated run-off, storm drains, and other stormwater conveyances.
4) Ensure that procedures are in place and that staff is properly trained in spill response/cleanup so that leaks and spills are addressed appropriately and promptly.

VEHICLE MAINTENANCE

GH-04

Not Applicable ☒ Applicable ☐

CONCERN

Vehicle and equipment maintenance can impact the water quality of nearby waterways by exposing stormwater to various pollutants including petroleum hydrocarbons, solvents, antifreeze/coolants, used oil, lubricating oil, grease, brake fluid, metals, and various chemicals. Additionally, vehicles that are wrecked or awaiting repair can be a source of pollution if leaking fluids are not properly controlled.

POLLUTION PREVENTION MEASURES

1) Conduct vehicle and equipment maintenance activities indoors.
2) Make sure incoming vehicles and equipment are inspected for leaking fluids and oil.
3) Move leaking vehicles or equipment indoors or under cover as soon as possible. At a minimum, a drip pan or absorbent pads shall be utilized to contain the leak until the vehicle/equipment can be relocated and the leak addressed.
4) Avoid performing maintenance on vehicles in close proximity to exterior doorways, which may allow released fluids to migrate outdoors.
5) Have an adequate supply of appropriate spill response equipment readily available and clean up all spills and leaks immediately utilizing dry cleaning techniques (e.g. absorbents and brooms).
6) Keep maintenance areas neat and well organized. Remove dirt, debris, and used absorbent regularly.
7) Inspect maintenance areas as well as maintenance equipment on a routine basis.
8) Store vehicles, parts, and generated wastes indoors or off the ground and under cover whenever possible. When practical, provide secondary containment.
9) Promptly transfer used fluids to the proper waste container; do not leave full drip pans or other open containers around the shop. Empty and clean drip pans and containers regularly.
10) Waste liquids shall not be poured into floor drains, sinks, outdoor storm drain inlets, or other storm drains or sewer connections. Liquid wastes are to be collected in properly labeled containers and disposed of by a licensed waste hauler or other appropriate method.
11) Store leaking batteries in a sealed container and provide secondary containment, if feasible.
12) Clean all parts indoors utilizing a self-contained parts washer.
13) Do not hose down indoor service areas to storm drains or areas where it can seep into groundwater.
14) Maintain floor drains in good working order and inspect for proper function on a routine basis. Consider plugging floor drains that discharge to the storm sewer.
15) Ensure oil/water separators (if present) are maintained in proper working order and are checked on a routine basis for the presence of oil.
16) If maintenance work must be performed outdoors, adhere to the following requirements:
    - Conduct maintenance activities over an impervious surface, away from stormwater inlets.
    - Cover outdoor maintenance areas and direct stormwater run-on away from the area.
    - Use drip pans or drop cloths underneath the equipment to catch leaks and drips.
    - Have an adequate supply of appropriate spill response equipment readily available.
    - Clean all spills immediately using dry cleaning techniques (e.g. absorbents and brooms).
    - Avoid performing maintenance activities during precipitation events.
    - Limit temporary outdoor maintenance activities to a single shift/day if additional time is needed to cover the work area at the end of each day/shift.

BMP Fact Sheet

VEHICLE AND EQUIPMENT WASHING

GH-05

Not Applicable ☒ Applicable ☐

CONCERN

Vehicle and equipment washing can generate washwater that contains oil, grease, organic compounds, surfactants, phosphates, metals, and suspended solids. If vehicles/equipment are washed outdoors on impervious surfaces, dirty washwater can contaminate stormwater that ends up in waterways. Washing equipment over pervious surfaces can allow washwater to seep into the ground contaminating groundwater.

POLLUTION PREVENTION MEASURES

1) Vehicle and equipment washing should only be conducted in designated indoor wash bays that capture and recycle washwater to the extent practical.
2) Wastewater from the washing facility should be discharged to the sanitary sewer system under the authorization of a wastewater discharge permit issued by the local municipal authority.
3) The floor of indoor vehicle wash bays should be completely bermed or sloped to collect wash water and prevent migration outdoors.
4) No other activities (e.g., fluid changes, repairs, material storage) shall be performed in wash areas.
5) Keep the wash bay neat and well organized. Sweep or pick up all trash and debris daily or as needed.
6) Solid materials accumulated on vehicles or in vehicle beds (e.g. salt, soil, grass, etc.) shall be knocked off or otherwise removed from the vehicle (while inside the wash bay) prior to washing. Solid materials shall be collected and disposed of properly.
7) For vehicles too large to completely fit in the wash bays, only the portion of the vehicle physically located in the confines of the wash bay shall be cleaned. The vehicle shall then be rotated to allow for the remaining portion of the vehicle to be washed.
8) Use nozzles that automatically turn off water when not in use and consider high-pressure, low-volume sprays.
9) Avoid detergents as much as possible. If detergents are necessary, use a biodegradable, phosphate-free detergent.
10) If discharging to an oil-water separator, use a non-emulsifying detergent.
11) Inspect floor drain systems, holding tanks, and conveyances associated with designated wash areas regularly. Maintain oil/water separators and/or process flowthrough separators on a routine basis.
12) Use commercial car washes when vehicle or equipment washing cannot be performed onsite without causing impacts to stormwater.
13) If washing must occur onsite and outdoors, use a designated impervious area that is marked with posted signs indicating proper washing procedures. This area must be bermed to contain the wash water and graded to direct the wash water to the sanitary sewer, an oil-water separator, a holding tank, a dead-end sump, or other containment area. Captured water shall be disposed of properly.
14) Avoid steam cleaning and engine/undercarriage washing which can produce high pollutant concentrations. If steam cleaning or engine washing is necessary, perform such cleanings within isolated indoor areas, and ensure wash water is treated and discharged to the sanitary sewer (if permitted to do so) or captured for off-site disposal.
15) Train staff in proper washing techniques and how to confine washing to designated wash areas.
16) Consider alternatives to washing such as using air to blow grass and debris from small equipment, wet-wiping equipment with rags, etc.

BMP Fact Sheet

MATERIAL STORAGE

GH-06

Not Applicable ☒ Applicable ☐

CONCERN

The storage of petroleum products, chemicals, paints, cleaners, pesticides, fertilizers, bags of erodible materials like sand, cement, and soil, and other potential pollutants can negatively impact surface waters through the accidental releases or leaching of materials into stormwater. Unprotected outdoor storage areas can generate a wide range of stormwater pollutants, such as sediment, nutrients, toxic materials, and petroleum products.

POLLUTION PREVENTION MEASURES

1) Whenever possible, store containers (e.g. drums, bins, bags, cans, and totes) indoors or under cover to limit exposure to stormwater.
2) Designate specific areas for material delivery and storage that are away from heavy traffic areas, storm drains, stormwater conveyances, and areas of concentrated run-off.
3) Designated outdoor storage areas should be paved or consist of an impervious surface.
4) Provide secondary containment for materials whenever possible or required per regulation.
5) Store materials on pallets to prevent stormwater run-on from coming into contact with materials, prevent container corrosion, and allow for better leak detection. Pallets must be in good condition and promptly replaced once damaged or deteriorated.
6) Stack containers according to the manufacturer's recommendations to avoid damage.
7) Immediately replace damaged, corroded, or leaking containers.
8) Ensure all storage containers are clearly labeled with their contents.
9) Keep containers tightly sealed after use.
10) Maintain an accurate inventory of hazardous substances and limit on-site storage to that which is necessary to support facility operations.
11) Keep storage areas neat and well organized; remove debris and unneeded material promptly.
12) If empty drums are stored outdoors, ensure that all openings are equipped with caps to prevent water intrusion and that the drum/storage area is labeled "Empty Drums".
13) Have an adequate supply of appropriate spill response equipment readily available and clean up all spills and releases immediately utilizing dry cleaning techniques (e.g. sweeping/absorbents).
14) Clean up all migrating dry materials upon discovery and address the source of the release.
15) Provide perimeter controls (e.g., berms, rock check dams, etc.) for erodible stockpiles of materials such as mulch, sand, and gravel to prevent migration into the stormwater system.
16) Routinely inspect material storage areas for leaks, material migration, and damaged or corroded containers. Ensure that secondary containment and other perimeter controls are in satisfactory condition.
17) Additional visual inspections of outdoor storage areas should be conducted after significant rainfall events (i.e., greater than 0.5 inches).

BMP Fact Sheet

ABOVEGROUND STORAGE TANKS

GH-07

Not Applicable ☐ Applicable ☒

CONCERN

Aboveground storage tanks (ASTs) may be used to store fuels, automotive fluids, chemicals, or deicing fluids. Leaks from tanks, piping, or other equipment and releases during fluid transfers can all impact stormwater quality. It is critical to maintain ASTs in good working condition to prevent spills and/or releases from occurring. Improperly managed storage tanks can cause significant environmental impacts.

POLLUTION PREVENTION MEASURES

General *(applicable to all storage tanks)*

1) ASTs should be installed and maintained in accordance with COMAR 26.10 and applicable fire codes.
2) ASTs should be provided with secondary containment, whenever feasible or required by regulation.
3) Secondary containment areas shall be maintained clean and dry; drain valves must be kept closed; accumulated liquid shall only be discharged if there are no visible signs of impacts, and in accordance with applicable regulations.
4) Inspect ASTs monthly to identify any leaking or malfunctioning equipment and ensure tanks are functioning as designed.
5) ASTs shall be equipped with a form of liquid-level detection (i.e. sight gauge, electronic monitoring).
6) ASTs shall be equipped with overfill prevention (i.e. overfill alarm and/or overfill prevention valve).
7) Tanks and piping should be protected from vehicle impact via barriers, bollards, guard rails, etc.
8) Install ASTs on solid foundations over impervious surfaces, and away from areas of concentrated run-off, storm drains, and other stormwater conveyances.
9) Properly label all storage tanks (e.g., contents, capacity, etc.).
10) Keep remote fills and fill port spill buckets clean and dry.
11) Keep fill ports, gates, and tank areas secured when not in use to prevent fuel theft and tampering.
12) Have an adequate supply of appropriate spill response equipment readily available and clean up all spills and leaks immediately utilizing dry cleaning techniques (e.g. absorbents and brooms).
13) Facilities that maintain 1,320 gallons or more of aboveground oil products shall prepare and implement a Spill Prevention, Control, and Countermeasure (SPCC) Plan, per 40 CFR 112.
14) Facilities that maintain 1,000 gallons or more of used oil or 10,000 gallons or more of virgin oil in ASTs shall obtain an Individual Oil Operations Permit from the MDE, per COMAR 26.10.01.09.
15) Owners/Operators of facilities that maintain more than 2,500 gallons of oil in ASTs are required to register each AST with MDE, per COMAR 26.10.01.10.

Bulk Fluid Transfers (Deliveries)

1) All bulk fluid transfer operations shall be performed under the direct supervision of knowledgeable County personnel. At no time shall the delivery vehicle or delivery vehicle operator be unsupervised.
2) The product level within the tank must be measured and available capacity verified before delivery.
3) Deliveries shall be made via fill ports equipped with catch basins to capture drips and spills.
4) Ensure an adequate supply of appropriate spill response equipment is readily available.
5) Post signs in delivery area displaying proper delivery procedures and emergency contact information.

ABOVEGROUND STORAGE TANKS

Used Oil Tanks

1) County personnel must verify the level of product in used oil tanks prior to filling.
2) Used oil tanks should only be filled via designated fill ports. Pumping used oil into the tank via a closed piping system is preferred to manually pouring used oil into the tank.

Brine Tanks

1) If multiple tanks are located onsite, the tanks should be plumbed to ensure that the complete failure of one tank will not drain all the tanks in the system (tanks must be isolated).
2) Minimize seeping and leaking at fittings by properly supporting piping and fittings, using flexible connectors or hoses to reduce stress, and installing corrosion-resistant fittings.
3) Consider placing hoses in non-permeable trenches or using drip-less nozzles to reduce repeated small spills.

RESIDENT DROP-OFF CENTER

Not Applicable ☒ Applicable ☐

CONCERN

Resident Drop-Off Centers are publicly accessible facilities where residents can drop off used automotive fluids (i.e. oil or antifreeze), municipal waste, recyclable, and/or organic waste, typically free of charge. Improper transfer or management of the waste materials can allow a number of pollutants including oils and greases, toxic and chemical compounds, nutrients, metals, and other wastes to enter waterways.

POLLUTION PREVENTION MEASURES

General *(applicable to all materials collected)*

1) Clearly identify waste materials accepted by the facility, and clearly mark designated collection areas.
2) Waste material should be inspected by a County representative, prior to disposal.
3) Avoid positioning waste receptacles near storm drains, water bodies, or areas of concentrated runoff.
4) When practical, receiving areas should be covered.
5) Do not allow containers to overflow or waste materials to accumulate on the ground.

Automotive Fluid Collection

1) Used oil, antifreeze, and automotive fluid receiving areas should be on impervious surfaces, covered, and provided with secondary containment, which shall be maintained clean and dry.
2) Provide lidded waste receptacles in the receiving area for the public to dispose of empty containers. Waste receptacles shall be emptied routinely and waste disposed of properly.
3) Collection areas shall be inspected daily and all trash and spilled liquids appropriately cleaned up.
4) The available capacity of waste liquid collection containers shall be routinely verified and waste removals scheduled, as needed.
5) Install appropriate controls to prohibit the overfilling of waste fluid collection containers.
6) Place appropriate spill response equipment in close proximity to drop-off areas.
7) If aboveground tanks are used to collect waste fluids, refer to BMP Fact Sheet GHP-07 (Aboveground Storage Tanks) for additional recommendations.

Organic Debris Collection

1) Routinely transfer collected organic debris/waste to a composting or disposal facility.
2) Do not permit composting of organic waste except at properly designed and permitted facilities.
3) Enact controls to prevent leaves and other windblown debris from entering stormwater inlets.

Municipal Waste / Recyclables Collection

1) Refer to BMP Fact Sheet GHP-01 (Waste Management) for additional recommendations.

BMP Fact Sheet

STOCKPILES

GH-09

Not Applicable ☒ Applicable ☐

CONCERN

The County may stockpile various erodible materials, the type of material can vary depending on the needs of the County. Stockpiled material may include soil, sand, millings, slag, cinders, sawdust, landscaping bark, compost, etc. Exposed stockpiles can easily erode due to wind or precipitation and contribute suspended solids to stormwater runoff.

POLLUTION PREVENTION MEASURES

1) Maintain stockpiles of erodible materials within roofed storage buildings or covered storage bins, if feasible. If not, stockpile material on an impervious surface and cover the stockpile.
2) Temporary stockpiles should be placed on an impermeable membrane (tarp) for quick clean-up.
3) Locate stockpiles away from drain inlets, catch basins, swales, areas of concentrated stormwater flow, water bodies, and environmentally sensitive areas.
4) Divert stormwater flows away from/around the stockpiles using a diversion device (e.g., temporary swale, berm, sandbags, or diversion fence).
5) Cover temporary stockpiles of erodible materials with a tarp that has been adequately secured. The covers must be in place at all times when the stockpile is not in active use.
6) When accessing a portion of the stockpile, only remove a section of the cover to minimize exposure to the elements.
7) Use barriers to isolate stockpiled materials from high-traffic areas to prevent tracking of materials.
8) Sweep (do not wash or hose down) in front of material stockpile storage areas at regular intervals, following loading and unloading activities, and during times of heavy use.
9) If material is observed migrating from the stockpile, clean up all migrated material upon discovery and provide additional controls to reduce migration from the stockpile. If such measures are ineffective implement controls to capture pollutants before they migrate off-site (e.g. silt fencing, inlet filters, filter socks, at-grade inlet protection, etc.).
10) Minimize material stockpile inventory based on historical inventory/usage records and public safety operational needs.
11) Cold mix asphalt shall be stored on and covered with plastic sheeting or comparable material.
12) Routinely inspect outdoor material stockpiles to verify existing controls are functioning properly and for signs of erosion or material transport.

BMP Fact Sheet

DEICING MATERIALS

GH-10

Not Applicable ☒ Applicable ☐

CONCERN

When salt and other de-icing materials are stored outside and uncovered, they have a much higher risk of being eroded and transported offsite by stormwater. Improper de-icing material and sand storage may result in stormwater runoff containing elevated concentrations of sodium chloride and dissolved solids. Sodium chloride (e.g., road salt) is an effective deicer but can be highly corrosive to stormwater facilities. Smaller waterways are at a higher risk to increases in salinity, which can threaten aquatic species. Additionally, runoff containing sodium chloride has the potential to reach drinking water sources where small traces can adversely impact public health.

POLLUTION PREVENTION MEASURES

1) Bagged de-icing chemicals must be stored indoors. If stored outdoors bags must be kept on pallets (off the ground) and covered at all times. Bags must be intact without holes or openings.
2) Bulk de-icing materials shall be stored under cover and on an impervious surface.
3) Bulk salt storage areas/buildings shall not be overfilled so that salt spills out beyond the entrance of the storage area/building.
4) Bulk salt storage areas/buildings shall be maintained in a structurally sound condition and in a way that prevents the release of salt and the infiltration of stormwater. Deicing materials should not touch the sides of metal storage containers.
5) Barriers such as berms, gates, knee walls, tarps, and/or straw bales shall be placed at the entrances of bulk salt storage areas/buildings to prohibit the migration of salt and prevent contact with precipitation/stormwater runoff.
6) Routinely inspect storage areas for migrating materials or deterioration of containment structures. Sweep up all migrating materials upon discovery and repair the source of the migrating pollutant.
7) Loading areas should be constructed of impervious material and covered or enclosed, to the extent practical, to reduce potential contact with stormwater.
8) Minimize the distance de-icing materials are transported during loading/unloading activities.
9) Prevent and/or minimize the spillage of salt and de-icing materials during loading/unloading activities, immediately clean spilled or tracked materials.
10) Sweeping of storage and loading/unloading areas shall be conducted immediately following loading/unloading activities.
11) Do not store de-icing materials (bulk or bagged) over or immediately adjacent to drains or waterways.
12) Control site drainage by diverting stormwater run-on away from storage/loading areas using appropriate measures (e.g., curbing, berms, etc.).
13) Slope storage/loading areas to direct salt-contaminated runoff to an appropriate collection area, and in a manner that prevents the runoff from reaching adjacent soil or surface waters.
14) Excess salt shall be removed from salt handling equipment (trucks, spreaders, etc.) following use/prior to storage. All cleaning shall occur on an impervious surface, which is sloped or curbed to contain any washwater and direct it to a collection area for recycling or proper disposal.

Appendix A

GHP Site Inspection Checklist

GOOD HOUSEKEEPING PLAN (GHP)
SITE INSPECTION CHECKLIST

Facility Name: _____ **Inspection Date:** _____

Inspector Name: _____ **Inspector Signature:** _____

- The intent of this inspection is to ensure that the site is being properly maintained and that there are no visible signs of pollutants entering the stormwater system.
- **A shaded status box designates an item in a non-compliant status. Please provide an explanation for all non-compliant items and subsequently document all corrective actions performed.**
- Retain the completed checklists for five (5) years.

Item	Status			CORRECTIVE ACTIONS/COMMENTS *Items which cannot be corrected immediately must be reported to the GHP/NPDES Program Manager*
	Yes	No	N/A	
GENERAL HOUSEKEEPING				
1. Are exterior areas of the facility free of accumulated trash, debris, and unneeded materials?				
2. Are stormwater drains and inlets free from debris, sediment, and evidence of spills/releases?				
3. Is the facility free from signs of erosion?				
4. Are paved surfaces free of accumulated sediment?				
5. Is spill response equipment available in maintenance areas, fueling areas, hazardous material storage areas, and/or other required areas?				
6. Are spill kits and absorbent materials clearly labeled and accessible (i.e. items are not piled on top of or in front of spill kits)?				
7. Are spill kits secured from being stolen or misused?				
8. Is there a labeled container present for the disposal of used spill cleanup material?				

GOOD HOUSEKEEPING PLAN (GHP)
SITE INSPECTION CHECKLIST

Item	Status			CORRECTIVE ACTIONS/COMMENTS *Items which cannot be corrected immediately must be reported to the GHP/NPDES Program Manager*
	Yes	No	N/A	
9. Does spill response equipment (i.e. spill kits, absorbent materials) need to be replenished?				
WASTE MANAGEMENT				
10. Are areas around solid waste containers/roll-offs/compactors free of excessive trash accumulation or overflowing containers?				
11. Are areas around solid waste containers/roll-offs/compactors free of visible evidence (i.e. leaks, staining) of ongoing stormwater pollution?				
12. Are scrap metal containers in good order and free from evidence of leaking oil/grease?				
13. For dumpsters, roll-offs, and other waste receptacles, where leaks are observed, have appropriate controls (e.g. containment, spill response, etc.) been enacted?				
14. Are the lids (if present) to solid waste containers closed?				
15. Is street sweeping/vactor waste being managed appropriately (i.e. no evidence of material migration)?				
16. Is waste cooking grease managed appropriately (i.e. no evidence of spilled material or excessive staining)?				
VEHICLE & EQUIPMENT STORAGE				
17. Are stored vehicles/equipment free from leaks?				
18. If leaks are present, are they being managed appropriately (drip pan or other methods in place to capture released liquids)?				
19. Are storage areas free of visible evidence of chronic leaks/spills (i.e. significant staining)?				

GOOD HOUSEKEEPING PLAN (GHP)
SITE INSPECTION CHECKLIST

Item	Status			CORRECTIVE ACTIONS/COMMENTS *Items which cannot be corrected immediately must be reported to the GHP/NPDES Program Manager*
	Yes	No	N/A	
VEHICLE & EQUIPMENT REFUELING				
20. Are the areas around refueling areas free from evidence of spills or leaks?				
21. Are refueling areas free of used absorbent material that has not been swept/cleaned up?				
22. Do fuel dispensers and hoses appear to be in good working order and well-maintained?				
VEHICLE MAINTENANCE				
23. Is there any indication that vehicle maintenance activities are being conducted outdoors?				
24. Is there any indication that vehicle maintenance activities are contributing to stormwater pollution?				
VEHICLE & EQUIPMENT WASHING				
25. If performed on-site, does all vehicle/equipment washing occur indoors?				
26. Is wash water collected and disposed of properly?				
27. Is there any indication that vehicle/equipment wash water is being released to stormwater conveyances or pervious areas?				
MATERIAL STORAGE				
28. Are all outdoor storage areas free from visible signs of leaks or spilled material?				
29. Are material storage containers in good condition?				

GOOD HOUSEKEEPING PLAN (GHP)
SITE INSPECTION CHECKLIST

Item	Status			CORRECTIVE ACTIONS/COMMENTS *Items which cannot be corrected immediately must be reported to the GHP/NPDES Program Manager*
	Yes	No	N/A	
30. Are drums, totes, and other containers (that are <u>not</u> empty) stored off the ground and covered, or stored indoors?				
31. Are liquid-containing drums/totes located outdoors provided with secondary containment?				
32. Are containers that are located outdoors equipped with closed lids except when material transfers are occurring?				
33. Are materials, which could impact stormwater, stored away from heavy traffic areas, or protected from vehicle collisions?				
34. Are chemical storage containers properly labeled?				
35. If empty drums are stored outside, are all openings equipped with caps to prevent water intrusion?				
ABOVEGROUND STORAGE TANKS				
36. Are all storage tanks, and surrounding areas free from visible signs of leaks or spilled material?				
37. Do storage tanks appear to be in good working order (e.g. free of obvious signs of damage or malfunctioning equipment)?				
38. Are remote fills associated with tanks free of liquid and debris?				
RESIDENT DROP-OFF CENTERS				
39. Are waste collection areas clearly identified?				
40. Are used oil/antifreeze collection tanks, containment structures, and surrounding areas free from visible signs of leaks or spilled material?				

GOOD HOUSEKEEPING PLAN (GHP)
SITE INSPECTION CHECKLIST

Item	Status			CORRECTIVE ACTIONS/COMMENTS *Items which cannot be corrected immediately must be reported to the GHP/NPDES Program Manager*
	Yes	No	N/A	
41. Do used oil/antifreeze collection tanks appear to be in good working order (e.g. free of obvious signs of damage or malfunctioning equipment)?				
42. Are empty used oil/antifreeze containers being collected and disposed of in the trash?				
43. Are areas around waste/recyclables containers free of excessive trash accumulation or overflowing containers?				
44. Are areas around waste/recyclables containers free of visible evidence (i.e. leaks, staining) of ongoing stormwater pollution?				
45. Are organic debris collection areas free of visible evidence of ongoing stormwater pollution (e.g. leaves and debris in stormwater conveyances)?				
STOCKPILES				
46. Are material piles, including salt, soil, sand, and millings isolated (i.e. covered, bermed, etc.) to prevent stormwater run-on and run-off?				
47. Are areas surrounding material piles (e.g. salt, soil, sand, millings, etc.) free of tracked or migrated material?				
DEICING MATERIALS				
48. Are all deicing materials stored indoors or undercover?				
49. Are salt storage structures in good condition (e.g. no evidence of material escaping or stormwater infiltration)?				
50. Is the salt loading area clean?				

GOOD HOUSEKEEPING PLAN (GHP)
SITE INSPECTION CHECKLIST

Item	Status			CORRECTIVE ACTIONS/COMMENTS *Items which cannot be corrected immediately must be reported to the GHP/NPDES Program Manager*
	Yes	No	N/A	
51. If deicing materials are tarped, is the tarp secure and covering the entire pile?				
52. Are bags of salt stored indoors, or off the ground and covered?				

ADDITIONAL COMMENTS:

Appendix B

GHP Stormwater Conveyance System Inspection Checklist

GOOD HOUSEKEEPING PLAN (GHP)
STORMWATER CONVEYANCE SYSTEM INSPECTION CHECKLIST

Facility Name: _____ **Inspection Date:** _____

Inspector Name: _____ **Inspector Signature:** _____

- The intent of this inspection is to ensure the free flow of stormwater within on-site conveyance systems and prevent damage/flooding.
- **If maintenance is needed, please provide an explanation, and document all corrective actions performed.**
- **Inspections shall include visually accessible infrastructure only; at no time shall inspection personnel enter a confined space.**
- Retain the completed checklists for five (5) years.

Item	Item Checked (Y/N/NA)	Maintenance Needed (Y/N)	CORRECTIVE ACTIONS/COMMENTS *Items which cannot be corrected immediately must be reported to the GHP/NPDES Program Manager*
CATCH BASINS / INLETS			
1. Look for debris and sediment blocking catch basin grates. If found, remove.			
2. Look for damage or cracks to the frame, grate, basin walls or bottom. If found, schedule repairs or replacement.			
3. Look for sediment and debris in the catch basin sump. If sediment fills 60% of the sump or comes within 6” of a pipe it should be scheduled for cleaning.			
4. If any type of filtering device is present, verify that the filter is not clogged, torn, or damaged; clean if clogged, replace if damaged.			
PIPES / CULVERTS			
5. Look for evidence of clogged piping (e.g. visual obstructions, standing water within manholes/inlets structures, etc.). If found, remove or schedule cleaning.			
6. Verify vegetation growth, if present, does not impede water flow. If it does, mow, cut back, or remove.			

GOOD HOUSEKEEPING PLAN (GHP)

STORMWATER CONVEYANCE SYSTEM INSPECTION CHECKLIST

Item	Item Checked (Y/N/NA)	Maintenance Needed (Y/N)	CORRECTIVE ACTIONS/COMMENTS *Items which cannot be corrected immediately must be reported to the GHP/NPDES Program Manager*
7. Inspect for damaged piping, inlets, outlets, headwalls, wingwalls, or excessive erosion. If found, make or schedule repairs.			
DITCHES / TRAPEZOIDAL SWALES			
8. Check for erosion, slumping, or undercutting. If found, make or schedule repairs.			
9. Look for trash and sediment accumulation. Remove all trash and remove sediment if it will impede water flow or clog downstream structures.			
10. Verify vegetation growth does not impede water flow. If it does, mow, cut back, or remove. Remove any trees or shrubs growing within the ditch.			
11. Check the integrity of check dams, filter socks, or other flow dissipation/filtering devices within the ditch or swale. Perform or schedule service if they are clogged, damaged, or deteriorated.			
12. Check inlets and outlets for debris accumulation, damage, or erosion. If found, make or schedule repairs.			

ADDITIONAL COMMENTS:

GUIDANCE DOCUMENT
GOOD HOUSEKEEPING PLAN - STORMWATER CONVEYANCE INSPECTIONS

INTRODUCTION

Maintaining catch basins, stormwater inlets, and other stormwater conveyance structures on a regular basis will remove pollutants, prevent backups, and ensure the system functions as intended to avoid flooding.

Each GHP-covered facility is required to conduct routine stormwater conveyance system inspections to ensure the free flow of stormwater within the conveyance system(s). The GHP includes a *"GHP Stormwater Conveyance System Inspection Checklist"*, to be used when completing the required inspections. This document provides additional background and guidance to aid facility personnel in completing the inspections.

CATCH BASINS / INLETS

Catch basins and inlets are all points for stormwater to enter storm drain systems. These structures are typically part of a larger conveyance system with many interconnected components where the impairment of one component can compromise the functionality of the larger system. Inlets and catch basins are subject to functional impairment by a variety of conditions, including:

- Structural damage including from vehicles and plows
- Cracks/joint separation at piping (inlet and outlet) connections
- Leaking due to cracks and joint separation
- Missing or damaged grates and grate frames
- Corrosion
- Blockage caused by debris, sediment, vegetation, or other objects

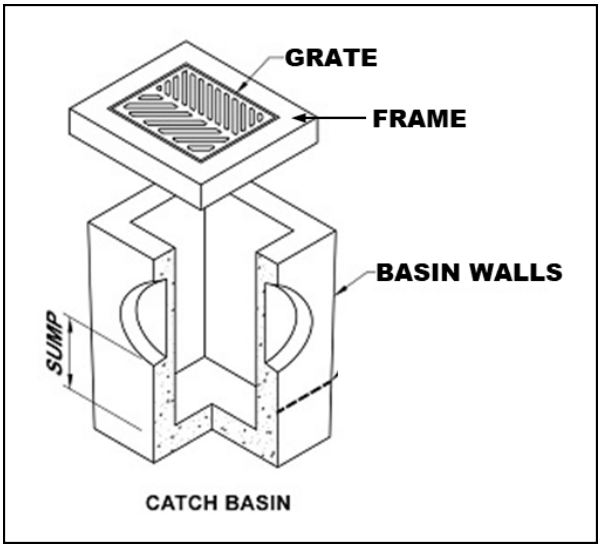

Figure 1 – Catch Basin Diagram

The following photos provide additional information related to the various inspection items, including examples of typical issues that may be encountered. The photo numbers correspond to the inspection checklist item number.

Inspection Item #1 [1]



Debris and sediment blocking inlet/catch basin grate.

Inspection Item #2 [2]



Damaged Grate

Inspection Item #2 [3]



Damaged Frame

Inspection Item #2 [4]



Failing brick walls with a stormwater inlet.

Inspection Item #2 [5]



Failing asphalt surrounding the inlet

[1] Grand Valley State University - https://www.gvsu.edu/groundswell/clogged-storm-drains-71.htm
[2] Georgia Department of Transportation – Stormwater System Inspection and Maintenance Manual, March 2020
[3] https://catchbasinauthority.ca/catch-basin-101/
[4] https://www.fixasphalt.com/catch-basin-repairs
[5] https://ccpia.org/catch-basin-and-manhole-inspections/

Inspection Item #3 [6]



Sediment and debris inside stormwater inlet

Inspection Item #3

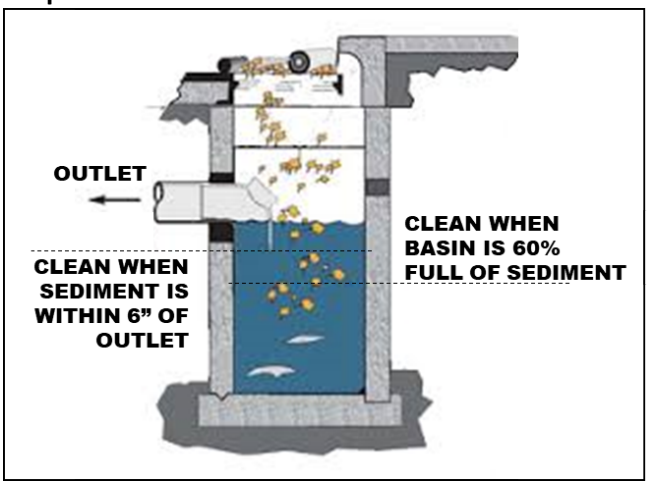

Remove sediment from a catch basin if it fills 60% of the sump or comes within 6" of a pipe.

Inspection Item #4 [7]



Example of inlet filter. Replace when filled or damaged. damaged.

Inspection Item #4 [8]



Example of an inlet filter sock, replace if

PIPES AND CULVERTS

Pipe systems are designed to convey stormwater runoff safely and effectively from inlets to various discharge points and outfalls. A culvert is a structure that channels water under an obstacle such as a roadway or railroad. These structures are subject to functional impairment by a variety of conditions, including:

- Blockage or obstruction due to build up of vegetation, debris, sediment, or other objects
- Cracks and/or joint separation
- Collapsed pipe
- Corrosion
- Root intrusion
- Lack of stabilization

[6] https://www.fixasphalt.com/catch-basin-repairs
[7] https://store.interstateproducts.com/products/Ultra-Drain-Guards/Ultra-Drain-Guard-Adjustable-Frame-Model
[8] https://www.newpig.com/pig-sediment-filter-sock/p/FLT787

Inspection Item #5 [9]



A pipe filled with sediment, inhibiting flow.

Inspection Item #5 [10]



Standing water around an inlet may indicate a blockage.

Inspection Item #6 [11]



Pipe conveyance filled with vegetation.

Inspection Item #7 [12]

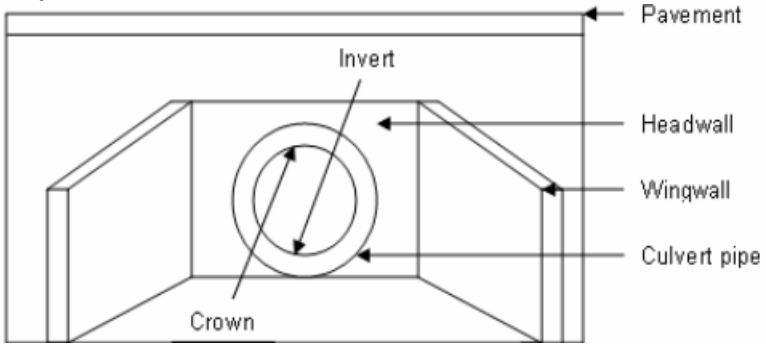

Diagram depicting various components of a culvert.

[9] Georgia Department of Transportation – Stormwater System Inspection and Maintenance Manual, March 2020
[10] https://www3.epa.gov/region9/water/npdes/stormwater-feature.html
[11] Georgia Department of Transportation – Stormwater System Inspection and Maintenance Manual, March 2020
[12] https://www.researchgate.net/figure/Components-of-a-Culvert_fig34_228685906

Inspection Item #7 [13]



A crack is the culvert headwall.

Inspection Item #7 [14]



Evidence of erosion around a culvert.

DITCHES AND SWALES

Ditches and swales serve similar functions. Both are used to convey stormwater. However, there are slight differences. A ditch is a narrow channel typically found along roads and at the edges of parking lots/driveways. A swale is like a ditch, but it is broad and shallow, and usually covered or lined with turfgrass or stone. Issues associated with these structures, which could impede their function include:

- Blockage or obstruction due to vegetation, debris, sediment, or other objects
- Erosion
- Rapidly moving water
- Lack of adequate vegetative cover for grass-lined channels

Inspection Item #8 [15]



Erosion and slumping within a drainage ditch.

Inspection Item #8 [16]



Slumping within a drainage swale.

[13] https://www.sbt-durabi.org/articles/xml/ARN0/
[14] https://lufkindailynews.com/news/local/culverts-crumbling-in-precinct-1/article_a9fed902-4379-5248-ab11-7471e2974298.html
[15] https://graniteseed.com/blog/how-to-stop-a-ditch-from-eroding/
[16] https://www.mnwcd.org/erosion-control

Inspection Item #9 [17]



Litter and debris within a ditch.

Inspection Item #9 [18]



Litter and debris within a swale.

Inspection Item #10 [19]



Cracks and joint separation in concrete channels, removal of vegetation may prevent future damage.

Inspection Item #11 [20]



Rock check dam across a channel.

Inspection Item #11 [21]



Filter sock check dams across a grass swale.

[17] https://craven.ces.ncsu.edu/2023/02/for-those-who-love-to-litter/
[18] https://www.cityoftulsa.org/government/departments/public-works/stormwater-quality/adopt-a-stream/
[19] Georgia Department of Transportation – Stormwater System Inspection and Maintenance Manual, March 2020
[20] EPA Stormwater Best Management Practice, Check Dams, December 2021
[21] EPA Stormwater Best Management Practice, Check Dams, December 2021

Inspection Item #12 [22]



Inlet to a rock-lined swale.

Inspection Item #12 [23]



Sediment accumulation at swale inlet.

END OF DOCUMENT

[22] https://www.stormwater.com/erosion-control/vegetation-management/article/13016118/inlet-protection-during-constructionand-after

[23] https://www.stormwater.com/erosion-control/vegetation-management/article/13016118/inlet-protection-during-constructionand-after

Appendix C

General Spill Response Procedures

SPILL RESPONSE AND NOTIFICATION PROCEDURES

A. Discovery of a Spill

1. Upon discovery of a spill, facility personnel should immediately assess the situation and determine if the spill is considered a "Minor" or "Major" spill. For a spill to be considered "Minor" all the following conditions must be satisfied:

    - ❖ The type of material spilled is known;
    - ❖ The spill is confined to the immediate work area;
    - ❖ The spill has not reached storm drains, sanitary sewer systems, open water, or surrounding soils;
    - ❖ The spill can be safely managed;
    - ❖ The employee can contain and clean up the spill with the PPE that is normally used in the work area;
    - ❖ The spill does not pose a serious threat of fire or an explosion; and
    - ❖ The spill does not pose conditions that are immediately dangerous to life or health.

2. If all the above conditions are met, the spill is considered "Minor". Refer to ***Section B*** of this document for appropriate response actions.

3. If all the above conditions are not met, then the spill is considered "Major". Refer to ***Section C*** of this document for appropriate response actions.

4. If a spill involves flammable liquids, ignitable vapors may be present - precautions must be taken to prevent ignition. Do not turn on or off equipment since sparks may be generated. Additionally, avoid the movement of equipment that could create static electricity. Larger spills of flammable liquids could pose a fire threat and would be considered a "Major" spill. Refer to ***Section C*** for appropriate actions.

B. Response to a "Minor" Spill

1. Identify the source of the spill and the direction in which the spill is heading.

2. Attempt to stop the spill at the source. Where applicable, the source of the spill shall be taken out of service until repairs can be made. If the spill is related to a fuel dispensing system, activate the Emergency Shut-Off (ESO) switch to prevent additional fuel disbursements.

3. If material is released outside a containment area, it is crucial that the material be contained as quickly as possible. Following proper safety procedures, use absorbent materials or diking to contain the spill. Prevent the spill from reaching storm drains, sanitary sewers, or open water. If a spill is flowing toward a drain, install temporary diking around the drain, block off the drain with a drain cover, or place absorbent material around the drain to prevent a discharge.

4. Once the spill has been stopped and contained, estimate the quantity of the spill. Consult applicable Safety Data Sheet (SDS) for material compatibility and environmental precautions. Note and follow recommendations regarding special precautions, spill response equipment, methods, or precautions. All cleanup work shall be conducted in accordance with existing safety protocols and SDS recommendations. Contact the facility Superintendent/Supervisor, or designee, for assistance if needed.

5. Recover or clean up the spilled material as much as possible. Material that cannot be reused must be discarded in accordance with state and federal regulations. Liquids absorbed by porous materials (e.g., wood, gravel, significant quantities of absorbent material, etc.) shall be placed into US DOT-approved 30-gallon or 55-gallon steel drums. Following cleanup, the container shall be secured and appropriately labeled to identify the contents and the date of the spill/cleanup. Containers shall be stored indoors and provided with secondary containment until transported off-site for disposal.

6. For spills that do not involve flammable liquids or other potential hazardous wastes, small quantities of used absorbent materials may be double bagged and disposed of along with municipal trash as long as all liquids have been absorbed (no free liquid may be present).

7. If the spilled material is a flammable liquid, corrosive liquid (pH ≤ 2 or ≥ 12.5), or other potential hazardous waste, all recovered product, impacted material, and used absorbent must be placed into a US DOT-approved containers/drums. Following cleanup, the container(s) shall be secured and appropriately labeled to identify the contents and the date of the spill/cleanup. Containers shall be stored indoors and provided with secondary containment until transported off-site for disposal. The facility Superintendent/ Supervisor, or designee shall be notified that a potential hazardous waste was released and that a waste characterization may be needed to facilitate proper disposal.

8. Surfaces that are contaminated by the spill shall be cleaned utilizing dry absorbent material. Tools and equipment that have been used in the cleanup must be decontaminated immediately after use. Decontamination water (if used) must be minimized, containerized, and disposed of properly.

9. If waste requires disposal, notify the facility Superintendent/Supervisor, or designee who will arrange for the proper characterization and disposal of any waste material. Representative sampling and analysis may be necessary to properly characterize the waste. The waste must be transported and disposed of in compliance with all applicable laws and regulations. Waste manifests, trip tickets, or bills of lading (if required) for waste disposal shall be kept on file.

10. Facility personnel shall restock/replace spill response equipment and absorbent materials used during the clean-up efforts.

11. The facility Superintendent/Supervisor, designee, or other appropriate County personnel shall be notified of the spill in accordance with ***Section D*** of this document.

C. Response to "Major" Spill

A "Major" spill is any discharge that does not meet the definition of a "Minor" spill. Any employee or contractor observing, being involved with, or recognizing a potential or actual spill of oil or other hazardous material, other than a "Minor" spill is responsible for performing the following actions:

1. If there is no danger to human health, attempt to stop and contain the spill at the source. If the spilled material is unknown, if PPE other than that which is typically used in your work area, is necessary to approach the spill area, or if assistance is required to stop the spill, do not attempt to contain the spill. If the spill is related to a fuel dispensing system, activate the Emergency Shut-Off (ESO) switch.

2. Most County employees lack the appropriate training to respond to "Major" spills. If the spill is of an unknown substance, is of a quantity that cannot be safely managed, or poses other risks beyond the training level of the employee, the employee should not attempt to contain or clean up the spill.

3. Evacuate individuals from the area and keep personnel away from the impacted area.

4. Immediately notify the facility Superintendent/Supervisor, or designee of the incident. The notified individual will determine the need for further evacuations and contact emergency response personnel (911), as necessary. *If a situation represents an immediate and grave danger to personnel, the public, structures, or other infrastructure, the individual discovering the incident may call 911 directly without first notifying facility management.*

5. The facility Superintendent/Supervisor or designee will determine if assistance from emergency response contractors is required to clean up the incident and will coordinate such spill response efforts with spill response contractors and other County agencies and first responders.

6. Facility personnel will provide assistance to emergency responders, as appropriate.

D. Reporting a Spill (Internal Notifications)

1. Once a spill is contained and cleanup operations have been initiated, the individual discovering the spill shall notify the appropriate County representatives and provide the following information:

    a) Identify the location, date, and time of the incident;
    b) Identify the type of material spilled or discharged;
    c) Estimate the quantity spilled and the rate of the spill;
    d) Identify the cause of the spill or discharge;
    e) Identify impacted media or infrastructure (soil, storm drains, open water bodies, etc.);
    f) Determine the extent of injuries involved; and
    g) Provide response measures implemented by the facility personnel.

E. Reporting a Spill (Regulatory Notifications)

State of Maryland Reporting Requirements (COMAR 26.10.01.05)

1. Upon discovery of a spill, the Responsible Person shall notify the MDE Emergency Response Division **within two (2) hours** by calling 866-633-4686. The caller shall be prepared to provide the following information:

    a) The time and date of the spill;
    b) The location and cause of the spill;
    c) The mode of transportation or type of facility involved;
    d) Type and quantity of oil spilled;
    e) Details regarding any assistance required;
    f) The name, address, and telephone number of the person making the report; and
    g) Any other pertinent information requested by the Department.

2. MDE will provide further guidance on additional responsibilities.

3. Within **ten (10) working days** of the completed removal and clean-up activities, the Responsible Person shall prepare a report using either County letterhead detailing the incident. The report shall contain the following:

    a) Date, time, and place of the spill;
    b) The amount and type of oil or hazardous substance spilled;
    c) A complete description of circumstances that contributed to the spill;
    d) A complete description of the containment and removal operations performed, including disposal sites to which oil refuse was transported;
    e) Procedures, methods, and precautions instituted to prevent the recurrence of an oil spill from the facility involved;
    f) Any other information considered necessary or required by the MDE for a complete description of the incident; and
    g) A certification that the information provided is true and correct to the knowledge of the person signing the report.

4. The completed report shall be submitted to mdeerd.mema@maryland.gov or faxed to 410-537-3932.

5. A digital copy of the completed report and any accompanying documentation shall be retained

Federal Reporting Requirements - National Response Center (40 CFR 110)

1. If any of the following criteria are met the Responsible Person shall notify the National Response Center (NRC) **within two (2) hours** of the spill discovery by calling 800-424-8802 or 202-426-2675.

    - ❖ The spill has caused a film, sheen, or discoloration of the surface water or shorelines;
    - ❖ The material spilled will violate applicable water quality standards (surface water or groundwater); or
    - ❖ The spill has caused a sludge or emulsion to be deposited beneath the surface of the water or on the shoreline.

2. At a minimum, the following information shall be provided to the NRC:

    a) Name, organization, and telephone number of reporting party;
    b) Name and address of the responsible party;
    c) Date, time, and location of the incident;
    d) Source and cause of the discharge;
    e) Type of material(s) discharged;
    f) Quantity of materials discharged;
    g) Danger or threat posed by discharge;
    h) Number and types of injuries (if any);
    i) Weather conditions at the incident location; and
    j) Other information to help emergency personnel respond to the incident.

3. If unable to report to the NRC, reports can be made to the EPA Regional Office at 800-438-2474 or the U.S. Coast Guard (USCG) at 202-372-1001. The NRC, EPA, or USCG will provide further guidance.

4. A digital record of the NRC notification and any accompanying documentation shall be retained on-site.

Federal Reporting Requirements - EPA Regional Administrator (40 CFR 112.4)

1. If the facility where the spill occurred is regulated under 40 CFR 112 and is required to have a Spill Prevention, Control, and Countermeasures (SPCC) Plan, the Responsible Person shall report the spill to the EPA Region III Administrator when any of the following criteria are met:

   - ❖ More than 1,000 gallons of oil is discharged to navigable waters or adjoining shorelines in a single incident; or
   - ❖ More than 42 gallons of oil is discharged to navigable waters or adjoining shorelines in each of two incidents occurring within any twelve-month period.

2. The report shall be made in writing **within 60 days** of the spill and shall contain:

   a) Name and location of the facility;
   b) Owner/operator name;
   c) Maximum storage/handling capacity of the facility and normal daily throughput;
   d) Corrective actions and countermeasures taken;
   e) Adequate description of the facility including maps, and flow diagrams;
   f) Cause of the discharge to navigable waters, including a failure analysis;
   g) Additional preventative measures taken or planned to minimize discharge reoccurrence; and
   h) Other information required by the EPA Regional III Administrator.

3. The report shall be submitted to the EPA Regional Administrator at the following address:

   EPA Regional Administrator
   US EPA Region 3
   1650 Arch Street (3RA00)
   Philadelphia, PA 19103-2029

4. A copy of the report shall be retained in the facility SPCC Plan.

Appendix D

Training Records

GOOD HOUSEKEEPING PLAN (GHP)
TRAINING ATTENDANCE LOG

FACILITY NAME: _____

DATE	NAME *(PRINT)*	SIGNATURE

By signing I affirm that I have completed the required annual training; and I am aware of and understand my responsibilities under this Plan.

GOOD HOUSEKEEPING PLAN (GHP)

Bush Creek Pumping Station
701 Pamela Drive
Abingdon, MD 21009

June 30, 2025

TABLE OF CONTENTS

1.0 BACKGROUND & INTRODUCTION 1
1.1 Objectives 1
1.2 Potential Stormwater Pollutants 1
2.0 RESPONSIBILITIES 3
2.1 GHP Implementation 3
2.2 Plan Review and Modification 3
2.3 Inspections 3
2.3.1 GHP Site Inspections 3
2.3.2 Conveyance System Inspections 4
2.4 Training 4
3.0 BEST MANAGEMENT PRACTICES (BMPs) 5
3.1 Applicability of BMP Fact Sheets 5
3.2 BMP Fact Sheets 5

List of Tables

TABLE 1-1 POTENTIAL STORMWATER POLLUTANTS AND THEIR SOURCES 2

List of BMP Fact Sheets

GH-01 - Waste Management
GH-02 - Vehicle and Equipment Storage
GH-03 - Vehicle/Equipment Refueling
GH-04 - Vehicle Maintenance
GH-05 - Vehicle/Equipment Washing
GH-06 - Material Storage
GH-07 - Aboveground Storage Tanks
GH-08 - Resident Drop-Off Centers
GH-09 - Stockpiles
GH-10 - Deicing Materials

Appendices

Appendix A: GHP Site Inspection Checklist
Appendix B: GHP Stormwater Conveyance Inspection Checklist
Appendix C: General Spill Response Procedures
Appendix D: Training Records

List of Acronyms

AST	-	Aboveground Storage Tank
BMP	-	Best Management Practice
CFR	-	Code of Federal Regulations
GHP	-	Good Housekeeping Plan
MDE	-	Maryland Department of the Environment
MS4	-	Municipal Separate Storm Sewer System
NPDES	-	National Pollutant Discharge Elimination System
SPCC	-	Spill Prevention, Control, and Countermeasure Plan

1.0 BACKGROUND & INTRODUCTION

Polluted stormwater runoff has the potential to enter the County's storm sewer systems (referred to as a municipal separate storm sewer system or MS4), and then discharge, untreated, into local water bodies. To address this potential stormwater pollution, the County is required to obtain a NPDES permit from the Maryland Department of the Environment (MDE). The NPDES Permit requires the County to take actions to prevent stormwater pollution, maintain storm sewer systems, monitor stormwater discharges, and develop and implement comprehensive management programs to minimize the discharge of pollutants from the storm sewer system.

To comply with Part IV.D.4.b of the County's Phase I MS4 Permit, the County must develop, implement, and maintain a Good Housekeeping Plan (GHP) for certain County-owned properties not required to be covered under Maryland's General Permit for Discharges from Stormwater Associated with Industrial Activities *(General Permit 12-SWA / 20-SW).*

To support this effort, a *"Good Housekeeping Plan Applicability Certification"* has been developed to evaluate and document if a specific County-owned facility is subject to the GHP requirements. The *"GHP Applicability Certification"* includes the following ten (10) potential stormwater polluting activities. If any of the covered activities are performed at the facility, then that facility is required to implement a site-specific GHP. The GHP will include each of the potential stormwater polluting activities identified in the *"GHP Applicability Certification"* and corresponding pollution prevention procedures.

- Waste Management
- Vehicle and Equipment Storage
- Vehicle/Equipment Refueling
- Vehicle Maintenance
- Vehicle/Equipment Washing
- Material Storage
- Aboveground Storage Tanks
- Resident Drop-Off Center
- Stockpiles
- Deicing Materials

1.1 Objectives

The GHP was developed to outline suitable practices, procedures, and protocols, or Best Management Practices ("BMPs") for reducing and/or preventing stormwater pollution associated with operations at covered County-owned properties. The intent of the pollution prevention procedures included in the GHP is to limit the release of materials with the potential to impact stormwater, this includes reducing or eliminating (to the extent practical):

- The occurrence of spills and leaks;
- The accidental dumping or release of materials;
- The accumulation of waste, trash, debris, unused parts/equipment, etc.;
- The exposure of hazardous materials to precipitation/run-off;
- Stormwater run-off contamination by improperly stored materials; and/or
- Illicit discharges to the storm drain system.

1.2 Potential Stormwater Pollutants

Table 1-1 on the following page provides a list of common potential pollutants that may result from the GHP-regulated activities identified above. Understanding the sources of these pollutants can help in achieving the goals and objectives of the GHP program.

TABLE 1-1 POTENTIAL STORMWATER POLLUTANTS AND THEIR SOURCES

		Waste Management	Vehicle/Equipment Storage	Vehicle/Equipment Refueling	Vehicle Maintenance	Vehicle/Equipment Washing	Material Storage	Aboveground Storage Tanks	Resident Drop-Off Center	Stockpiles	Deicing Materials
Pollutants	**Sources**	**Associated GHP Activity**									
Sediment	Land disturbance; erosion; paved surfaces; material stockpiles; waste storage; salt/abrasive application	X				X	X		X	X	X
Hydrocarbons *(petroleum compounds)*	Leaking vehicle and equipment; vehicle and equipment cleaning; spills; improper storage; maintenance activities; scrap metal disposal; improper disposal	X	X	X	X	X	X	X	X		
Metals	Vehicle brake and tire wear; vehicle/equipment exhaust; batteries; galvanized metal; paint and wood preservatives; fuels, pesticides, and cleaners; vehicle fueling, maintenance, and washing; industrial waste	X	X	X	X	X	X	X	X		
Toxic Chemicals	Pesticide application; improper chemical storage; leaks and spills from storage containers; leaking vehicles; maintenance activities	X	X		X	X	X	X	X		
Chlorides	De-Icing chemicals										X
Trash/Debris	Improper waste storage and disposal; leaking trash containers; littering; poor housekeeping	X	X				X		X		
Nutrients (nitrogen and Phosphorus)	Fertilizers; malfunctioning septic systems; sewer overflows; animal/pet waste; vehicle washing; decaying grass and leaves; leaking trash containers; atmospheric deposition	X				X	X		X		

2.0 RESPONSIBILITIES

2.1 GHP Implementation

A separate GHP is required for each covered facility. The following individual *(identified by name and/or title)* is accountable for the administration and implementation of the GHP at this facility and has the authority to commit the necessary resources to implement this Plan.

_____

Name and/or Title of Responsible Person

The Responsible Person listed above shall ensure that facility personnel involved in any GHP-covered activities identified in this Plan, are provided with access to, and are familiar with, the contents of this Plan.

2.2 Plan Review and Modification

The *"GHP Applicability Certification"* completed for this facility must be reviewed and updated once every permit term, or within one (1) year of substantial changes to a facility's operations that could reasonably contribute to stormwater pollution. Any newly constructed/acquired facility must be assessed within one (1) year of initiating operations at the facility. The facility's GHP must be amended and reissued to the facility within one (1) year of any changes to the facility's *"GHP Applicability Certification"*.

When warranted, the BMP Fact Sheets provided in Section 3.0 may need to be updated or revised. At the same time, additional BMP Facts Sheets may be added. The need for such updates or modifications will be at the discretion of the County's GHP Program Administrator.

2.3 Inspections

The County's MS4 permit requires each facility covered by a GHP to have the following:

1. Written procedures for annually assessing County properties to prevent the discharge of pollutants, spills, and leaks into the County's storm sewer system; and

2. Written procedure for performing stormwater conveyance system inspections and for removing debris that may cause clogging, backups, and flooding.

To meet these requirements, each facility that is covered by a GHP will be required to complete routine site inspections and stormwater conveyance system inspections as detailed below. Facility management will be responsible for ensuring the necessary inspections are completed within the required timeframes, that corrective actions (if needed) are performed, and that records of inspections and completed corrective actions are maintained for at least five (5) years.

2.3.1 GHP Site Inspections

The GHP Site Inspection will be performed to ensure that each GHP-covered facility is being properly maintained and that there are no visible signs of pollutants entering the stormwater system. GHP facilities shall utilize the *"GHP Site Inspection Checklist"*, provided in ***Appendix A*** to complete the required inspection. At a minimum, each facility is to be inspected every five (5) years.

2.3.2 Conveyance System Inspections

Stormwater conveyance systems are generally comprised of curbs and gutters, catch basins, inlet structures, swales, channels, piping, culverts, detention ponds, outfalls, or other structures that are used to collect, contain, and convey stormwater runoff.

The unimpeded movement of stormwater through conveyance systems is critical in avoiding backups and flooding, which can impede facility operations and damage property. Routine inspections and preventative care of stormwater conveyance systems can ensure these systems function as intended and prevent the need for costly and time-consuming repairs and retrofits.

Each GHP-covered facility is required to conduct routine stormwater conveyance system inspections to ensure the free flow of stormwater within the conveyance systems. GHP-covered facilities shall utilize the *"GHP Stormwater Conveyance System Inspection Checklist"*, provided in ***Appendix B*** to complete the required inspections. At a minimum, facility conveyance system inspections are to be conducted every five (5) years.

2.4 Training

As part of the GHP requirements within the County's Phase I NPDES permit, annual training must be provided to all appropriate staff and contractors. Such training shall be provided to any individuals responsible for implementing the GHP, performing the required inspections, or involved in any of the GHP-covered activities identified in this Plan. The required training shall focus on the duties and responsibilities assigned to site personnel in implementing the GHP and the best management practices (BMPs) prescribed in this Plan for preventing, reducing, and eliminating the discharge of pollutants during facility activities.

The County's MS4/GHP Program Coordinator will be responsible for developing the required training and disseminating it to GHP-covered facilities. Each GHP-covered facility will be responsible for identifying staff/contractors who must attend annual training, ensuring identified staff complete the required training, and maintaining records that document training dates and attendees. Training records and other documentation shall be maintained in ***Appendix D*** of this Plan.

3.0 BEST MANAGEMENT PRACTICES (BMPs)

This section contains a BMP Fact Sheet for each of the ten (10) GHP-regulated activities. The County's operations are not limited to the BMPs contained within this document; nor is the County required to implement all of the pollution prevention measures identified within each BMP Fact Sheet. The County should select and implement those measures that are applicable and have the greatest potential for reducing stormwater pollution.

The BMP Fact Sheets contained within this document offer recommended protocols for a particular activity. These pollution prevention measures are considered non-structural BMPs with a focus on source control of potential pollutants.

3.1 Applicability of BMP Fact Sheets

The *"GHP Applicability Certification"* completed for this facility has identified the activities conducted at this facility that require coverage under this Plan. Each of the BMP Fact Sheets shall be marked as to whether they are applicable or not applicable to this facility. The Applicable/Not Applicable indicator on each BMP Fact Sheet can be revised in response to changes in operations at the facility.

3.2 BMP Fact Sheets

BMP Fact Sheets can be found on the following pages. For the sake of consistency, the general outline of a BMP Fact Sheet will be as follows:

- Identification of GHP-covered activity.
- Applicability of the BMP Fact Sheet to the facility.
- A general description of the concern the activity poses to stormwater.
- Recommended pollution prevention measures for reducing/eliminating stormwater pollution.
- Additional sources of information, if applicable.

WASTE MANAGEMENT

Not Applicable ☒ Applicable ☐

CONCERN

Improperly managed waste can allow trash and debris to be washed into storm drains which poses a concern to water quality, marine life, and public health. It also has the potential to create obstructions in the drainage system, which can lead to backups and flooding. Additionally, improper storage and handling of waste materials can allow pollutants including oils and greases, toxic and chemical compounds (including nutrients), bacteria, metals, and other potentially hazardous wastes to enter waterways.

POLLUTION PREVENTION MEASURES

General *(applicable to all waste management activities)*

1) Provide suitable containers, preferably with working covers, to collect waste materials.
2) Ensure that appropriate waste containers are available in areas where waste is generated.
3) Provide a cover over waste storage areas, if feasible.
4) Avoid positioning waste receptacles near storm drains, water bodies, or areas of concentrated runoff.
5) Ensure that lids to waste containers *(if present)* are kept closed to prevent the intrusion of precipitation and prevent trash from blowing out of the receptacle.
6) For waste receptacles, which do not have lids and could leak, containers should be inspected regularly and controls (e.g., containment, spill response, etc.) shall be enacted whenever leaks or dry-weather discharges are observed.
7) Routinely inspect waste containers, roll-offs, compactors, and other waste receptacles for the presence of excessive waste accumulation and overflowing containers.
8) Ensure that wastes accumulating on the ground are placed in a suitable waste container.
9) Ensure that wastes are removed from the facility regularly by a licensed and contracted vendor.
10) Repair or replace damaged waste container lids.

Trash Compactors

1) Routinely inspect trash compactors for malfunctioning equipment or leaking hydraulic oil and provide the appropriate spill response if leaking equipment is encountered.
2) Regularly inspect compactors for leaking fluids and implement appropriate controls such as spill response/cleanup, collection or diversion of released fluids, providing secondary containment, etc. whenever leaks or dry-weather discharges are observed.

Scrap Metal Collection Containers

1) Avoid placing oily or grease-covered items in uncovered scrap metal recycling collection containers. If needed, wrap oily/greasy items in plastic garbage bags before placing them in the collection container.

Hazardous/Universal Wastes

1) Ensure that hazardous waste and universal wastes (e.g., batteries, bulbs, etc.) are collected and stored indoors or within covered collection containers.
2) Verify that hazardous/universal waste collection containers are in good condition, not leaking, and compatible with the wastes being stored.

Street Sweeping / Vactor Truck Material Storage

1) Do not site storage areas near storm drains, open water bodies, or areas of concentrated runoff.
2) Install sediment control devices (e.g. silt fence, silt socks, hay bales, etc.) around the staging area. Inspect these controls regularly and replace them as needed.
3) Cover the materials staging area, if feasible.
4) Provide oil-absorbent booms if necessary to control oily discharge. Inspect and replace booms regularly.
5) The staging area should be checked periodically for evidence of sediment migrating outside of the staging area. Material that has migrated out of the staging area should be promptly swept and returned to the staging area or disposed of.

Waste Cooking Oil/Grease

1) Maintain storage containers indoors or within a covered location, if feasible.
2) Storage containers shall be secured to prevent infiltration of precipitation and accidental/intentional spills or releases.
3) Carefully transfer waste oil/grease to the appropriate collection container to avoid spills.
4) Maintain suitable spill response equipment near collection containers. Immediately clean up any spilled oil/grease. Keep the exterior of the collection container clean and free of spilled oil/grease.
5) Provide secondary containment for collection containers, if feasible.

VEHICLE AND EQUIPMENT STORAGE

Not Applicable ☒ Applicable ☐

CONCERN

Vehicles and equipment may be stored onsite to support various County operations (e.g., construction, maintenance, snow removal, roadside assistance, mass transit, mowing, etc.). Examples of County owned and operated vehicles and equipment stored onsite at any given time include but are not limited to, the following: cars, trucks, buses, emergency response vehicles, garbage trucks, heavy equipment (backhoes, frontend loaders, etc.), forklifts, towable generators, portable light stands, and roadside equipment. Vehicle and equipment storage is considered a pollutant source due to the potential for incidental releases of petroleum products, lubricants, and various automotive fluids.

POLLUTION PREVENTION MEASURES

1) When possible/practical, store vehicles and equipment inside or under cover to prevent exposure to precipitation.
2) If vehicles or equipment must be stored outside, store vehicles/equipment in designated areas away from areas of concentrated runoff, storm drains, and other stormwater conveyances.
3) Vehicles and equipment shall be staged on impervious (asphalt or concrete) surfaces;
4) Keep truck beds clean and ensure potential stormwater pollutants are stored in closed containers, covered, or otherwise protected from stormwater exposure.
5) Conduct routine visual inspections of vehicles and equipment for the presence of leaks and respond accordingly.
6) Leaking vehicles/equipment should be moved inside or under cover. At a minimum, drip pans or absorbent pads shall be used to contain the leak until the vehicle/equipment can be relocated and the leak addressed.
7) Drain all fluids from wrecked or heavily damaged vehicles and equipment before storage.
8) Have an adequate supply of appropriate spill response equipment readily available and clean up all spills and leaks immediately utilizing dry cleaning techniques (e.g. absorbents and brooms).
9) Train staff in spill response so that incidents are addressed in a timely fashion.
10) Do not wash down areas where leaks have collected on ground surfaces; use dry cleaning methods such as granular absorbents and brooms.

VEHICLE AND EQUIPMENT REFUELING

Not Applicable ☒ Applicable ☐

CONCERN

Refueling activities associated with County vehicles and equipment can result in a discharge of fuel (gasoline and diesel fuel), which has the potential to enter the storm drain system and/or a nearby waterway. Such releases can introduce hydrocarbons, metals, and other toxic chemicals to stormwater runoff.

POLLUTION PREVENTION MEASURES

General Procedures *(applicable to all refueling activities)*

1) Routinely *(at least daily)* inspect the fuel dispensing area for any spills or leaks.
2) Routinely inspect fuel dispensing equipment looking for leaking or damaged equipment. Damaged or malfunctioning equipment shall be taken out of service until it has been repaired.
3) Fuels will only be dispensed into authorized vehicles, equipment, and approved containers.
4) Vehicle operators must remain outside of their vehicles and in attendance of fuel dispensers at all times while dispensing fuel.
5) Third-party contractors must be trained in proper refueling procedures and pollution prevention.
6) Do not utilize a foreign object to keep the dispenser nozzle in the open position. If present, a “hold-open” latch on the nozzle may be used.
7) Do not “top off” a vehicle’s fuel tank once the dispenser nozzle’s automatic shut-off has been activated. Topping off tanks may result in spills. Post signs in fueling areas warning vehicle operators against "topping off" of vehicle fuel tanks.
8) After refueling has stopped, allow several seconds to pass before removing the nozzle and returning it to the dispenser. This will prevent incidental dripping from the nozzle.
9) Employees refueling vehicles shall note the location of the “Emergency Fuel Shut Off” switch, to be used to stop the flow of fuel to the dispensers in the event of a release or emergency.
10) Have an adequate supply of appropriate spill response equipment readily available and clean up all spills immediately utilizing dry cleaning techniques (e.g. absorbents and brooms).
11) Immediately clean up and dispose of used absorbent material.
12) Do not wash down fueling areas; use dry cleaning methods such as granular absorbents and brooms.
13) Conduct refueling activities over impervious (e.g. concrete) surfaces. Place drip pans or absorbent pads under the nozzle if fueling occurs over a permeable surface such as grass or soil.
14) Install oil control devices in storm drains that may receive contaminated runoff from fueling areas.
15) Cover fueling areas with a canopy or roof to prevent direct contact with rainfall. Direct run-on away from fueling areas and collect fueling area run-off in a dead-end sump or oil-water separator.

Mobile Equipment Refueling

1) Refuel equipment on an impervious surface, downgradient of, and at the farthest practical distance from any storm drain, stormwater conveyance, stormwater management feature, or waterway.
2) Utilize secondary containment when refueling equipment (when practical).
3) Ensure mobile refuelers are parked in designated locations and away from areas of concentrated run-off, storm drains, and other stormwater conveyances.
4) Ensure that procedures are in place and that staff is properly trained in spill response/cleanup so that leaks and spills are addressed appropriately and promptly.

VEHICLE MAINTENANCE

GH-04

Not Applicable ☒ Applicable ☐

CONCERN

Vehicle and equipment maintenance can impact the water quality of nearby waterways by exposing stormwater to various pollutants including petroleum hydrocarbons, solvents, antifreeze/coolants, used oil, lubricating oil, grease, brake fluid, metals, and various chemicals. Additionally, vehicles that are wrecked or awaiting repair can be a source of pollution if leaking fluids are not properly controlled.

POLLUTION PREVENTION MEASURES

1) Conduct vehicle and equipment maintenance activities indoors.
2) Make sure incoming vehicles and equipment are inspected for leaking fluids and oil.
3) Move leaking vehicles or equipment indoors or under cover as soon as possible. At a minimum, a drip pan or absorbent pads shall be utilized to contain the leak until the vehicle/equipment can be relocated and the leak addressed.
4) Avoid performing maintenance on vehicles in close proximity to exterior doorways, which may allow released fluids to migrate outdoors.
5) Have an adequate supply of appropriate spill response equipment readily available and clean up all spills and leaks immediately utilizing dry cleaning techniques (e.g. absorbents and brooms).
6) Keep maintenance areas neat and well organized. Remove dirt, debris, and used absorbent regularly.
7) Inspect maintenance areas as well as maintenance equipment on a routine basis.
8) Store vehicles, parts, and generated wastes indoors or off the ground and under cover whenever possible. When practical, provide secondary containment.
9) Promptly transfer used fluids to the proper waste container; do not leave full drip pans or other open containers around the shop. Empty and clean drip pans and containers regularly.
10) Waste liquids shall not be poured into floor drains, sinks, outdoor storm drain inlets, or other storm drains or sewer connections. Liquid wastes are to be collected in properly labeled containers and disposed of by a licensed waste hauler or other appropriate method.
11) Store leaking batteries in a sealed container and provide secondary containment, if feasible.
12) Clean all parts indoors utilizing a self-contained parts washer.
13) Do not hose down indoor service areas to storm drains or areas where it can seep into groundwater.
14) Maintain floor drains in good working order and inspect for proper function on a routine basis. Consider plugging floor drains that discharge to the storm sewer.
15) Ensure oil/water separators (if present) are maintained in proper working order and are checked on a routine basis for the presence of oil.
16) If maintenance work must be performed outdoors, adhere to the following requirements:
    - Conduct maintenance activities over an impervious surface, away from stormwater inlets.
    - Cover outdoor maintenance areas and direct stormwater run-on away from the area.
    - Use drip pans or drop cloths underneath the equipment to catch leaks and drips.
    - Have an adequate supply of appropriate spill response equipment readily available.
    - Clean all spills immediately using dry cleaning techniques (e.g. absorbents and brooms).
    - Avoid performing maintenance activities during precipitation events.
    - Limit temporary outdoor maintenance activities to a single shift/day if additional time is needed to cover the work area at the end of each day/shift.

BMP Fact Sheet

VEHICLE AND EQUIPMENT WASHING

GH-05

Not Applicable ☒ Applicable ☐

CONCERN

Vehicle and equipment washing can generate washwater that contains oil, grease, organic compounds, surfactants, phosphates, metals, and suspended solids. If vehicles/equipment are washed outdoors on impervious surfaces, dirty washwater can contaminate stormwater that ends up in waterways. Washing equipment over pervious surfaces can allow washwater to seep into the ground contaminating groundwater.

POLLUTION PREVENTION MEASURES

1) Vehicle and equipment washing should only be conducted in designated indoor wash bays that capture and recycle washwater to the extent practical.
2) Wastewater from the washing facility should be discharged to the sanitary sewer system under the authorization of a wastewater discharge permit issued by the local municipal authority.
3) The floor of indoor vehicle wash bays should be completely bermed or sloped to collect wash water and prevent migration outdoors.
4) No other activities (e.g., fluid changes, repairs, material storage) shall be performed in wash areas.
5) Keep the wash bay neat and well organized. Sweep or pick up all trash and debris daily or as needed.
6) Solid materials accumulated on vehicles or in vehicle beds (e.g. salt, soil, grass, etc.) shall be knocked off or otherwise removed from the vehicle (while inside the wash bay) prior to washing. Solid materials shall be collected and disposed of properly.
7) For vehicles too large to completely fit in the wash bays, only the portion of the vehicle physically located in the confines of the wash bay shall be cleaned. The vehicle shall then be rotated to allow for the remaining portion of the vehicle to be washed.
8) Use nozzles that automatically turn off water when not in use and consider high-pressure, low-volume sprays.
9) Avoid detergents as much as possible. If detergents are necessary, use a biodegradable, phosphate-free detergent.
10) If discharging to an oil-water separator, use a non-emulsifying detergent.
11) Inspect floor drain systems, holding tanks, and conveyances associated with designated wash areas regularly. Maintain oil/water separators and/or process flowthrough separators on a routine basis.
12) Use commercial car washes when vehicle or equipment washing cannot be performed onsite without causing impacts to stormwater.
13) If washing must occur onsite and outdoors, use a designated impervious area that is marked with posted signs indicating proper washing procedures. This area must be bermed to contain the wash water and graded to direct the wash water to the sanitary sewer, an oil-water separator, a holding tank, a dead-end sump, or other containment area. Captured water shall be disposed of properly.
14) Avoid steam cleaning and engine/undercarriage washing which can produce high pollutant concentrations. If steam cleaning or engine washing is necessary, perform such cleanings within isolated indoor areas, and ensure wash water is treated and discharged to the sanitary sewer (if permitted to do so) or captured for off-site disposal.
15) Train staff in proper washing techniques and how to confine washing to designated wash areas.
16) Consider alternatives to washing such as using air to blow grass and debris from small equipment, wet-wiping equipment with rags, etc.

BMP Fact Sheet

MATERIAL STORAGE

GH-06

Not Applicable ☒ Applicable ☐

CONCERN

The storage of petroleum products, chemicals, paints, cleaners, pesticides, fertilizers, bags of erodible materials like sand, cement, and soil, and other potential pollutants can negatively impact surface waters through the accidental releases or leaching of materials into stormwater. Unprotected outdoor storage areas can generate a wide range of stormwater pollutants, such as sediment, nutrients, toxic materials, and petroleum products.

POLLUTION PREVENTION MEASURES

1) Whenever possible, store containers (e.g. drums, bins, bags, cans, and totes) indoors or under cover to limit exposure to stormwater.
2) Designate specific areas for material delivery and storage that are away from heavy traffic areas, storm drains, stormwater conveyances, and areas of concentrated run-off.
3) Designated outdoor storage areas should be paved or consist of an impervious surface.
4) Provide secondary containment for materials whenever possible or required per regulation.
5) Store materials on pallets to prevent stormwater run-on from coming into contact with materials, prevent container corrosion, and allow for better leak detection. Pallets must be in good condition and promptly replaced once damaged or deteriorated.
6) Stack containers according to the manufacturer's recommendations to avoid damage.
7) Immediately replace damaged, corroded, or leaking containers.
8) Ensure all storage containers are clearly labeled with their contents.
9) Keep containers tightly sealed after use.
10) Maintain an accurate inventory of hazardous substances and limit on-site storage to that which is necessary to support facility operations.
11) Keep storage areas neat and well organized; remove debris and unneeded material promptly.
12) If empty drums are stored outdoors, ensure that all openings are equipped with caps to prevent water intrusion and that the drum/storage area is labeled "Empty Drums".
13) Have an adequate supply of appropriate spill response equipment readily available and clean up all spills and releases immediately utilizing dry cleaning techniques (e.g. sweeping/absorbents).
14) Clean up all migrating dry materials upon discovery and address the source of the release.
15) Provide perimeter controls (e.g., berms, rock check dams, etc.) for erodible stockpiles of materials such as mulch, sand, and gravel to prevent migration into the stormwater system.
16) Routinely inspect material storage areas for leaks, material migration, and damaged or corroded containers. Ensure that secondary containment and other perimeter controls are in satisfactory condition.
17) Additional visual inspections of outdoor storage areas should be conducted after significant rainfall events (i.e., greater than 0.5 inches).

BMP Fact Sheet

ABOVEGROUND STORAGE TANKS

GH-07

Not Applicable ☐ Applicable ☒

CONCERN

Aboveground storage tanks (ASTs) may be used to store fuels, automotive fluids, chemicals, or deicing fluids. Leaks from tanks, piping, or other equipment and releases during fluid transfers can all impact stormwater quality. It is critical to maintain ASTs in good working condition to prevent spills and/or releases from occurring. Improperly managed storage tanks can cause significant environmental impacts.

POLLUTION PREVENTION MEASURES

General *(applicable to all storage tanks)*

1) ASTs should be installed and maintained in accordance with COMAR 26.10 and applicable fire codes.
2) ASTs should be provided with secondary containment, whenever feasible or required by regulation.
3) Secondary containment areas shall be maintained clean and dry; drain valves must be kept closed; accumulated liquid shall only be discharged if there are no visible signs of impacts, and in accordance with applicable regulations.
4) Inspect ASTs monthly to identify any leaking or malfunctioning equipment and ensure tanks are functioning as designed.
5) ASTs shall be equipped with a form of liquid-level detection (i.e. sight gauge, electronic monitoring).
6) ASTs shall be equipped with overfill prevention (i.e. overfill alarm and/or overfill prevention valve).
7) Tanks and piping should be protected from vehicle impact via barriers, bollards, guard rails, etc.
8) Install ASTs on solid foundations over impervious surfaces, and away from areas of concentrated run-off, storm drains, and other stormwater conveyances.
9) Properly label all storage tanks (e.g., contents, capacity, etc.).
10) Keep remote fills and fill port spill buckets clean and dry.
11) Keep fill ports, gates, and tank areas secured when not in use to prevent fuel theft and tampering.
12) Have an adequate supply of appropriate spill response equipment readily available and clean up all spills and leaks immediately utilizing dry cleaning techniques (e.g. absorbents and brooms).
13) Facilities that maintain 1,320 gallons or more of aboveground oil products shall prepare and implement a Spill Prevention, Control, and Countermeasure (SPCC) Plan, per 40 CFR 112.
14) Facilities that maintain 1,000 gallons or more of used oil or 10,000 gallons or more of virgin oil in ASTs shall obtain an Individual Oil Operations Permit from the MDE, per COMAR 26.10.01.09.
15) Owners/Operators of facilities that maintain more than 2,500 gallons of oil in ASTs are required to register each AST with MDE, per COMAR 26.10.01.10.

Bulk Fluid Transfers (Deliveries)

1) All bulk fluid transfer operations shall be performed under the direct supervision of knowledgeable County personnel. At no time shall the delivery vehicle or delivery vehicle operator be unsupervised.
2) The product level within the tank must be measured and available capacity verified before delivery.
3) Deliveries shall be made via fill ports equipped with catch basins to capture drips and spills.
4) Ensure an adequate supply of appropriate spill response equipment is readily available.
5) Post signs in delivery area displaying proper delivery procedures and emergency contact information.

ABOVEGROUND STORAGE TANKS

Used Oil Tanks

1) County personnel must verify the level of product in used oil tanks prior to filling.
2) Used oil tanks should only be filled via designated fill ports. Pumping used oil into the tank via a closed piping system is preferred to manually pouring used oil into the tank.

Brine Tanks

1) If multiple tanks are located onsite, the tanks should be plumbed to ensure that the complete failure of one tank will not drain all the tanks in the system (tanks must be isolated).
2) Minimize seeping and leaking at fittings by properly supporting piping and fittings, using flexible connectors or hoses to reduce stress, and installing corrosion-resistant fittings.
3) Consider placing hoses in non-permeable trenches or using drip-less nozzles to reduce repeated small spills.

RESIDENT DROP-OFF CENTER

Not Applicable ☒ Applicable ☐

CONCERN

Resident Drop-Off Centers are publicly accessible facilities where residents can drop off used automotive fluids (i.e. oil or antifreeze), municipal waste, recyclable, and/or organic waste, typically free of charge. Improper transfer or management of the waste materials can allow a number of pollutants including oils and greases, toxic and chemical compounds, nutrients, metals, and other wastes to enter waterways.

POLLUTION PREVENTION MEASURES

General *(applicable to all materials collected)*

1) Clearly identify waste materials accepted by the facility, and clearly mark designated collection areas.
2) Waste material should be inspected by a County representative, prior to disposal.
3) Avoid positioning waste receptacles near storm drains, water bodies, or areas of concentrated runoff.
4) When practical, receiving areas should be covered.
5) Do not allow containers to overflow or waste materials to accumulate on the ground.

Automotive Fluid Collection

1) Used oil, antifreeze, and automotive fluid receiving areas should be on impervious surfaces, covered, and provided with secondary containment, which shall be maintained clean and dry.
2) Provide lidded waste receptacles in the receiving area for the public to dispose of empty containers. Waste receptacles shall be emptied routinely and waste disposed of properly.
3) Collection areas shall be inspected daily and all trash and spilled liquids appropriately cleaned up.
4) The available capacity of waste liquid collection containers shall be routinely verified and waste removals scheduled, as needed.
5) Install appropriate controls to prohibit the overfilling of waste fluid collection containers.
6) Place appropriate spill response equipment in close proximity to drop-off areas.
7) If aboveground tanks are used to collect waste fluids, refer to BMP Fact Sheet GHP-07 (Aboveground Storage Tanks) for additional recommendations.

Organic Debris Collection

1) Routinely transfer collected organic debris/waste to a composting or disposal facility.
2) Do not permit composting of organic waste except at properly designed and permitted facilities.
3) Enact controls to prevent leaves and other windblown debris from entering stormwater inlets.

Municipal Waste / Recyclables Collection

1) Refer to BMP Fact Sheet GHP-01 (Waste Management) for additional recommendations.

BMP Fact Sheet

STOCKPILES

GH-09

Not Applicable ☒ Applicable ☐

CONCERN

The County may stockpile various erodible materials, the type of material can vary depending on the needs of the County. Stockpiled material may include soil, sand, millings, slag, cinders, sawdust, landscaping bark, compost, etc. Exposed stockpiles can easily erode due to wind or precipitation and contribute suspended solids to stormwater runoff.

POLLUTION PREVENTION MEASURES

1) Maintain stockpiles of erodible materials within roofed storage buildings or covered storage bins, if feasible. If not, stockpile material on an impervious surface and cover the stockpile.
2) Temporary stockpiles should be placed on an impermeable membrane (tarp) for quick clean-up.
3) Locate stockpiles away from drain inlets, catch basins, swales, areas of concentrated stormwater flow, water bodies, and environmentally sensitive areas.
4) Divert stormwater flows away from/around the stockpiles using a diversion device (e.g., temporary swale, berm, sandbags, or diversion fence).
5) Cover temporary stockpiles of erodible materials with a tarp that has been adequately secured. The covers must be in place at all times when the stockpile is not in active use.
6) When accessing a portion of the stockpile, only remove a section of the cover to minimize exposure to the elements.
7) Use barriers to isolate stockpiled materials from high-traffic areas to prevent tracking of materials.
8) Sweep (do not wash or hose down) in front of material stockpile storage areas at regular intervals, following loading and unloading activities, and during times of heavy use.
9) If material is observed migrating from the stockpile, clean up all migrated material upon discovery and provide additional controls to reduce migration from the stockpile. If such measures are ineffective implement controls to capture pollutants before they migrate off-site (e.g. silt fencing, inlet filters, filter socks, at-grade inlet protection, etc.).
10) Minimize material stockpile inventory based on historical inventory/usage records and public safety operational needs.
11) Cold mix asphalt shall be stored on and covered with plastic sheeting or comparable material.
12) Routinely inspect outdoor material stockpiles to verify existing controls are functioning properly and for signs of erosion or material transport.

BMP Fact Sheet

DEICING MATERIALS

GH-10

Not Applicable ☒ Applicable ☐

CONCERN

When salt and other de-icing materials are stored outside and uncovered, they have a much higher risk of being eroded and transported offsite by stormwater. Improper de-icing material and sand storage may result in stormwater runoff containing elevated concentrations of sodium chloride and dissolved solids. Sodium chloride (e.g., road salt) is an effective deicer but can be highly corrosive to stormwater facilities. Smaller waterways are at a higher risk to increases in salinity, which can threaten aquatic species. Additionally, runoff containing sodium chloride has the potential to reach drinking water sources where small traces can adversely impact public health.

POLLUTION PREVENTION MEASURES

1) Bagged de-icing chemicals must be stored indoors. If stored outdoors bags must be kept on pallets (off the ground) and covered at all times. Bags must be intact without holes or openings.
2) Bulk de-icing materials shall be stored under cover and on an impervious surface.
3) Bulk salt storage areas/buildings shall not be overfilled so that salt spills out beyond the entrance of the storage area/building.
4) Bulk salt storage areas/buildings shall be maintained in a structurally sound condition and in a way that prevents the release of salt and the infiltration of stormwater. Deicing materials should not touch the sides of metal storage containers.
5) Barriers such as berms, gates, knee walls, tarps, and/or straw bales shall be placed at the entrances of bulk salt storage areas/buildings to prohibit the migration of salt and prevent contact with precipitation/stormwater runoff.
6) Routinely inspect storage areas for migrating materials or deterioration of containment structures. Sweep up all migrating materials upon discovery and repair the source of the migrating pollutant.
7) Loading areas should be constructed of impervious material and covered or enclosed, to the extent practical, to reduce potential contact with stormwater.
8) Minimize the distance de-icing materials are transported during loading/unloading activities.
9) Prevent and/or minimize the spillage of salt and de-icing materials during loading/unloading activities, immediately clean spilled or tracked materials.
10) Sweeping of storage and loading/unloading areas shall be conducted immediately following loading/unloading activities.
11) Do not store de-icing materials (bulk or bagged) over or immediately adjacent to drains or waterways.
12) Control site drainage by diverting stormwater run-on away from storage/loading areas using appropriate measures (e.g., curbing, berms, etc.).
13) Slope storage/loading areas to direct salt-contaminated runoff to an appropriate collection area, and in a manner that prevents the runoff from reaching adjacent soil or surface waters.
14) Excess salt shall be removed from salt handling equipment (trucks, spreaders, etc.) following use/prior to storage. All cleaning shall occur on an impervious surface, which is sloped or curbed to contain any washwater and direct it to a collection area for recycling or proper disposal.

Appendix A

GHP Site Inspection Checklist

GOOD HOUSEKEEPING PLAN (GHP)
SITE INSPECTION CHECKLIST

Facility Name: _____ **Inspection Date:** _____

Inspector Name: _____ **Inspector Signature:** _____

- The intent of this inspection is to ensure that the site is being properly maintained and that there are no visible signs of pollutants entering the stormwater system.
- **A shaded status box designates an item in a non-compliant status. Please provide an explanation for all non-compliant items and subsequently document all corrective actions performed.**
- Retain the completed checklists for five (5) years.

Item	Status			CORRECTIVE ACTIONS/COMMENTS *Items which cannot be corrected immediately must be reported to the GHP/NPDES Program Manager*
	Yes	No	N/A	
GENERAL HOUSEKEEPING				
1. Are exterior areas of the facility free of accumulated trash, debris, and unneeded materials?				
2. Are stormwater drains and inlets free from debris, sediment, and evidence of spills/releases?				
3. Is the facility free from signs of erosion?				
4. Are paved surfaces free of accumulated sediment?				
5. Is spill response equipment available in maintenance areas, fueling areas, hazardous material storage areas, and/or other required areas?				
6. Are spill kits and absorbent materials clearly labeled and accessible (i.e. items are not piled on top of or in front of spill kits)?				
7. Are spill kits secured from being stolen or misused?				
8. Is there a labeled container present for the disposal of used spill cleanup material?				

GOOD HOUSEKEEPING PLAN (GHP)
SITE INSPECTION CHECKLIST

Item	Status			CORRECTIVE ACTIONS/COMMENTS *Items which cannot be corrected immediately must be reported to the GHP/NPDES Program Manager*
	Yes	No	N/A	
9. Does spill response equipment (i.e. spill kits, absorbent materials) need to be replenished?				
WASTE MANAGEMENT				
10. Are areas around solid waste containers/roll-offs/compactors free of excessive trash accumulation or overflowing containers?				
11. Are areas around solid waste containers/roll-offs/compactors free of visible evidence (i.e. leaks, staining) of ongoing stormwater pollution?				
12. Are scrap metal containers in good order and free from evidence of leaking oil/grease?				
13. For dumpsters, roll-offs, and other waste receptacles, where leaks are observed, have appropriate controls (e.g. containment, spill response, etc.) been enacted?				
14. Are the lids (if present) to solid waste containers closed?				
15. Is street sweeping/vactor waste being managed appropriately (i.e. no evidence of material migration)?				
16. Is waste cooking grease managed appropriately (i.e. no evidence of spilled material or excessive staining)?				
VEHICLE & EQUIPMENT STORAGE				
17. Are stored vehicles/equipment free from leaks?				
18. If leaks are present, are they being managed appropriately (drip pan or other methods in place to capture released liquids)?				
19. Are storage areas free of visible evidence of chronic leaks/spills (i.e. significant staining)?				

GOOD HOUSEKEEPING PLAN (GHP)
SITE INSPECTION CHECKLIST

Item	Status			CORRECTIVE ACTIONS/COMMENTS *Items which cannot be corrected immediately must be reported to the GHP/NPDES Program Manager*
	Yes	No	N/A	
VEHICLE & EQUIPMENT REFUELING				
20. Are the areas around refueling areas free from evidence of spills or leaks?				
21. Are refueling areas free of used absorbent material that has not been swept/cleaned up?				
22. Do fuel dispensers and hoses appear to be in good working order and well-maintained?				
VEHICLE MAINTENANCE				
23. Is there any indication that vehicle maintenance activities are being conducted outdoors?				
24. Is there any indication that vehicle maintenance activities are contributing to stormwater pollution?				
VEHICLE & EQUIPMENT WASHING				
25. If performed on-site, does all vehicle/equipment washing occur indoors?				
26. Is wash water collected and disposed of properly?				
27. Is there any indication that vehicle/equipment wash water is being released to stormwater conveyances or pervious areas?				
MATERIAL STORAGE				
28. Are all outdoor storage areas free from visible signs of leaks or spilled material?				
29. Are material storage containers in good condition?				

GOOD HOUSEKEEPING PLAN (GHP)
SITE INSPECTION CHECKLIST

Item	Status			CORRECTIVE ACTIONS/COMMENTS *Items which cannot be corrected immediately must be reported to the GHP/NPDES Program Manager*
	Yes	No	N/A	
30. Are drums, totes, and other containers (that are <u>not</u> empty) stored off the ground and covered, or stored indoors?				
31. Are liquid-containing drums/totes located outdoors provided with secondary containment?				
32. Are containers that are located outdoors equipped with closed lids except when material transfers are occurring?				
33. Are materials, which could impact stormwater, stored away from heavy traffic areas, or protected from vehicle collisions?				
34. Are chemical storage containers properly labeled?				
35. If empty drums are stored outside, are all openings equipped with caps to prevent water intrusion?				
ABOVEGROUND STORAGE TANKS				
36. Are all storage tanks, and surrounding areas free from visible signs of leaks or spilled material?				
37. Do storage tanks appear to be in good working order (e.g. free of obvious signs of damage or malfunctioning equipment)?				
38. Are remote fills associated with tanks free of liquid and debris?				
RESIDENT DROP-OFF CENTERS				
39. Are waste collection areas clearly identified?				
40. Are used oil/antifreeze collection tanks, containment structures, and surrounding areas free from visible signs of leaks or spilled material?				

GOOD HOUSEKEEPING PLAN (GHP)
SITE INSPECTION CHECKLIST

Item	Status			CORRECTIVE ACTIONS/COMMENTS *Items which cannot be corrected immediately must be reported to the GHP/NPDES Program Manager*
	Yes	No	N/A	
41. Do used oil/antifreeze collection tanks appear to be in good working order (e.g. free of obvious signs of damage or malfunctioning equipment)?				
42. Are empty used oil/antifreeze containers being collected and disposed of in the trash?				
43. Are areas around waste/recyclables containers free of excessive trash accumulation or overflowing containers?				
44. Are areas around waste/recyclables containers free of visible evidence (i.e. leaks, staining) of ongoing stormwater pollution?				
45. Are organic debris collection areas free of visible evidence of ongoing stormwater pollution (e.g. leaves and debris in stormwater conveyances)?				
STOCKPILES				
46. Are material piles, including salt, soil, sand, and millings isolated (i.e. covered, bermed, etc.) to prevent stormwater run-on and run-off?				
47. Are areas surrounding material piles (e.g. salt, soil, sand, millings, etc.) free of tracked or migrated material?				
DEICING MATERIALS				
48. Are all deicing materials stored indoors or undercover?				
49. Are salt storage structures in good condition (e.g. no evidence of material escaping or stormwater infiltration)?				
50. Is the salt loading area clean?				

GOOD HOUSEKEEPING PLAN (GHP)
SITE INSPECTION CHECKLIST

Item	Status			CORRECTIVE ACTIONS/COMMENTS *Items which cannot be corrected immediately must be reported to the GHP/NPDES Program Manager*
	Yes	No	N/A	
51. If deicing materials are tarped, is the tarp secure and covering the entire pile?				
52. Are bags of salt stored indoors, or off the ground and covered?				

ADDITIONAL COMMENTS:

Appendix B

GHP Stormwater Conveyance System Inspection Checklist

GOOD HOUSEKEEPING PLAN (GHP)
STORMWATER CONVEYANCE SYSTEM INSPECTION CHECKLIST

Facility Name: _____ **Inspection Date:** _____

Inspector Name: _____ **Inspector Signature:** _____

- The intent of this inspection is to ensure the free flow of stormwater within on-site conveyance systems and prevent damage/flooding.
- **If maintenance is needed, please provide an explanation, and document all corrective actions performed.**
- **Inspections shall include visually accessible infrastructure only; at no time shall inspection personnel enter a confined space.**
- Retain the completed checklists for five (5) years.

Item	Item Checked (Y/N/NA)	Maintenance Needed (Y/N)	CORRECTIVE ACTIONS/COMMENTS *Items which cannot be corrected immediately must be reported to the GHP/NPDES Program Manager*
CATCH BASINS / INLETS			
1. Look for debris and sediment blocking catch basin grates. If found, remove.			
2. Look for damage or cracks to the frame, grate, basin walls or bottom. If found, schedule repairs or replacement.			
3. Look for sediment and debris in the catch basin sump. If sediment fills 60% of the sump or comes within 6” of a pipe it should be scheduled for cleaning.			
4. If any type of filtering device is present, verify that the filter is not clogged, torn, or damaged; clean if clogged, replace if damaged.			
PIPES / CULVERTS			
5. Look for evidence of clogged piping (e.g. visual obstructions, standing water within manholes/inlets structures, etc.). If found, remove or schedule cleaning.			
6. Verify vegetation growth, if present, does not impede water flow. If it does, mow, cut back, or remove.			

GOOD HOUSEKEEPING PLAN (GHP)

STORMWATER CONVEYANCE SYSTEM INSPECTION CHECKLIST

Item	Item Checked (Y/N/NA)	Maintenance Needed (Y/N)	CORRECTIVE ACTIONS/COMMENTS *Items which cannot be corrected immediately must be reported to the GHP/NPDES Program Manager*
7. Inspect for damaged piping, inlets, outlets, headwalls, wingwalls, or excessive erosion. If found, make or schedule repairs.			
DITCHES / TRAPEZOIDAL SWALES			
8. Check for erosion, slumping, or undercutting. If found, make or schedule repairs.			
9. Look for trash and sediment accumulation. Remove all trash and remove sediment if it will impede water flow or clog downstream structures.			
10. Verify vegetation growth does not impede water flow. If it does, mow, cut back, or remove. Remove any trees or shrubs growing within the ditch.			
11. Check the integrity of check dams, filter socks, or other flow dissipation/filtering devices within the ditch or swale. Perform or schedule service if they are clogged, damaged, or deteriorated.			
12. Check inlets and outlets for debris accumulation, damage, or erosion. If found, make or schedule repairs.			

ADDITIONAL COMMENTS:

GUIDANCE DOCUMENT
GOOD HOUSEKEEPING PLAN - STORMWATER CONVEYANCE INSPECTIONS

INTRODUCTION

Maintaining catch basins, stormwater inlets, and other stormwater conveyance structures on a regular basis will remove pollutants, prevent backups, and ensure the system functions as intended to avoid flooding.

Each GHP-covered facility is required to conduct routine stormwater conveyance system inspections to ensure the free flow of stormwater within the conveyance system(s). The GHP includes a *"GHP Stormwater Conveyance System Inspection Checklist"*, to be used when completing the required inspections. This document provides additional background and guidance to aid facility personnel in completing the inspections.

CATCH BASINS / INLETS

Catch basins and inlets are all points for stormwater to enter storm drain systems. These structures are typically part of a larger conveyance system with many interconnected components where the impairment of one component can compromise the functionality of the larger system. Inlets and catch basins are subject to functional impairment by a variety of conditions, including:

- Structural damage including from vehicles and plows
- Cracks/joint separation at piping (inlet and outlet) connections
- Leaking due to cracks and joint separation
- Missing or damaged grates and grate frames
- Corrosion
- Blockage caused by debris, sediment, vegetation, or other objects

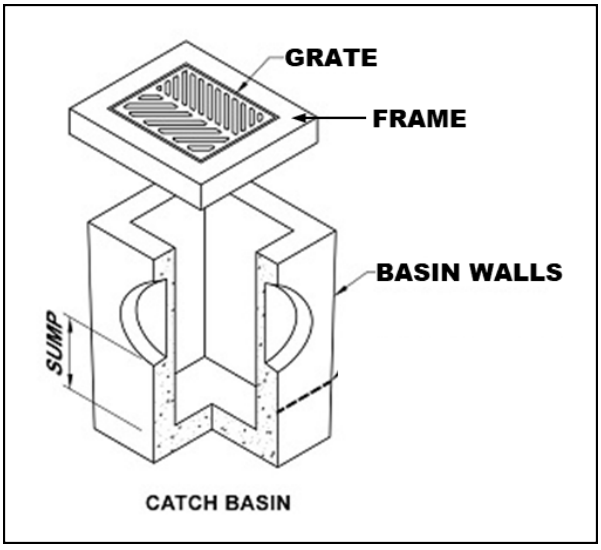

Figure 1 – Catch Basin Diagram

The following photos provide additional information related to the various inspection items, including examples of typical issues that may be encountered. The photo numbers correspond to the inspection checklist item number.

Inspection Item #1 [1]



Debris and sediment blocking inlet/catch basin grate.

Inspection Item #2 [2]



Damaged Grate

Inspection Item #2 [3]



Damaged Frame

Inspection Item #2 [4]



Failing brick walls with a stormwater inlet.

Inspection Item #2 [5]



Failing asphalt surrounding the inlet

[1] Grand Valley State University - https://www.gvsu.edu/groundswell/clogged-storm-drains-71.htm
[2] Georgia Department of Transportation – Stormwater System Inspection and Maintenance Manual, March 2020
[3] https://catchbasinauthority.ca/catch-basin-101/
[4] https://www.fixasphalt.com/catch-basin-repairs
[5] https://ccpia.org/catch-basin-and-manhole-inspections/

Inspection Item #3 [6]



Sediment and debris inside stormwater inlet

Inspection Item #3

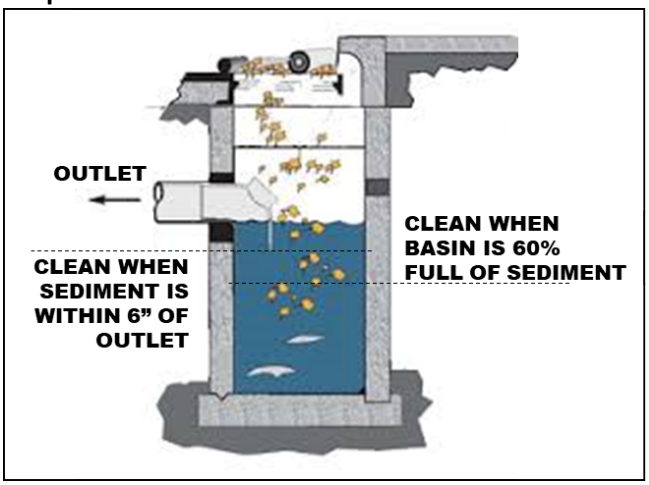

Remove sediment from a catch basin if it fills 60% of the sump or comes within 6" of a pipe.

Inspection Item #4 [7]



Example of inlet filter. Replace when filled or damaged. damaged.

Inspection Item #4 [8]



Example of an inlet filter sock, replace if

PIPES AND CULVERTS

Pipe systems are designed to convey stormwater runoff safely and effectively from inlets to various discharge points and outfalls. A culvert is a structure that channels water under an obstacle such as a roadway or railroad. These structures are subject to functional impairment by a variety of conditions, including:

- Blockage or obstruction due to build up of vegetation, debris, sediment, or other objects
- Cracks and/or joint separation
- Collapsed pipe
- Corrosion
- Root intrusion
- Lack of stabilization

[6] https://www.fixasphalt.com/catch-basin-repairs
[7] https://store.interstateproducts.com/products/Ultra-Drain-Guards/Ultra-Drain-Guard-Adjustable-Frame-Model
[8] https://www.newpig.com/pig-sediment-filter-sock/p/FLT787

Inspection Item #5 [9]



A pipe filled with sediment, inhibiting flow.

Inspection Item #5 [10]



Standing water around an inlet may indicate a blockage.

Inspection Item #6 [11]



Pipe conveyance filled with vegetation.

Inspection Item #7 [12]

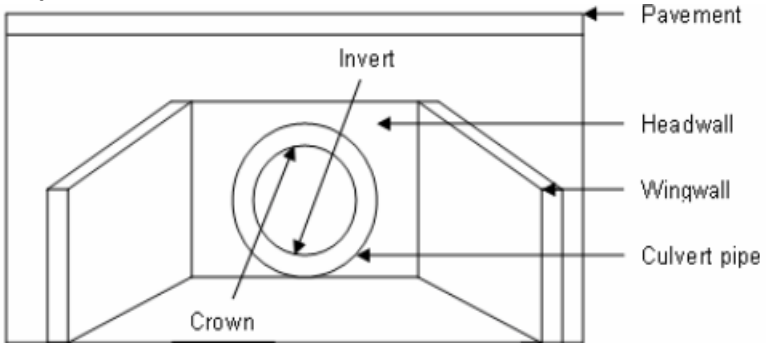

Diagram depicting various components of a culvert.

[9] Georgia Department of Transportation – Stormwater System Inspection and Maintenance Manual, March 2020
[10] https://www3.epa.gov/region9/water/npdes/stormwater-feature.html
[11] Georgia Department of Transportation – Stormwater System Inspection and Maintenance Manual, March 2020
[12] https://www.researchgate.net/figure/Components-of-a-Culvert_fig34_228685906

Inspection Item #7 [13]



A crack is the culvert headwall.

Inspection Item #7 [14]



Evidence of erosion around a culvert.

DITCHES AND SWALES

Ditches and swales serve similar functions. Both are used to convey stormwater. However, there are slight differences. A ditch is a narrow channel typically found along roads and at the edges of parking lots/driveways. A swale is like a ditch, but it is broad and shallow, and usually covered or lined with turfgrass or stone. Issues associated with these structures, which could impede their function include:

- Blockage or obstruction due to vegetation, debris, sediment, or other objects
- Erosion
- Rapidly moving water
- Lack of adequate vegetative cover for grass-lined channels

Inspection Item #8 [15]



Erosion and slumping within a drainage ditch.

Inspection Item #8 [16]



Slumping within a drainage swale.

[13] https://www.sbt-durabi.org/articles/xml/ARN0/
[14] https://lufkindailynews.com/news/local/culverts-crumbling-in-precinct-1/article_a9fed902-4379-5248-ab11-7471e2974298.html
[15] https://graniteseed.com/blog/how-to-stop-a-ditch-from-eroding/
[16] https://www.mnwcd.org/erosion-control

Inspection Item #9 [17]



Litter and debris within a ditch.

Inspection Item #9 [18]



Litter and debris within a swale.

Inspection Item #10 [19]



Cracks and joint separation in concrete channels, removal of vegetation may prevent future damage.

Inspection Item #11 [20]



Rock check dam across a channel.

Inspection Item #11 [21]



Filter sock check dams across a grass swale.

[17] https://craven.ces.ncsu.edu/2023/02/for-those-who-love-to-litter/
[18] https://www.cityoftulsa.org/government/departments/public-works/stormwater-quality/adopt-a-stream/
[19] Georgia Department of Transportation – Stormwater System Inspection and Maintenance Manual, March 2020
[20] EPA Stormwater Best Management Practice, Check Dams, December 2021
[21] EPA Stormwater Best Management Practice, Check Dams, December 2021

Inspection Item #12 [22]



Inlet to a rock-lined swale.

Inspection Item #12 [23]



Sediment accumulation at swale inlet.

END OF DOCUMENT

[22] https://www.stormwater.com/erosion-control/vegetation-management/article/13016118/inlet-protection-during-constructionand-after

[23] https://www.stormwater.com/erosion-control/vegetation-management/article/13016118/inlet-protection-during-constructionand-after

Appendix C

General Spill Response Procedures

SPILL RESPONSE AND NOTIFICATION PROCEDURES

A. Discovery of a Spill

1. Upon discovery of a spill, facility personnel should immediately assess the situation and determine if the spill is considered a "Minor" or "Major" spill. For a spill to be considered "Minor" all the following conditions must be satisfied:

    - ❖ The type of material spilled is known;
    - ❖ The spill is confined to the immediate work area;
    - ❖ The spill has not reached storm drains, sanitary sewer systems, open water, or surrounding soils;
    - ❖ The spill can be safely managed;
    - ❖ The employee can contain and clean up the spill with the PPE that is normally used in the work area;
    - ❖ The spill does not pose a serious threat of fire or an explosion; and
    - ❖ The spill does not pose conditions that are immediately dangerous to life or health.

2. If all the above conditions are met, the spill is considered "Minor". Refer to ***Section B*** of this document for appropriate response actions.

3. If all the above conditions are not met, then the spill is considered "Major". Refer to ***Section C*** of this document for appropriate response actions.

4. If a spill involves flammable liquids, ignitable vapors may be present - precautions must be taken to prevent ignition. Do not turn on or off equipment since sparks may be generated. Additionally, avoid the movement of equipment that could create static electricity. Larger spills of flammable liquids could pose a fire threat and would be considered a "Major" spill. Refer to ***Section C*** for appropriate actions.

B. Response to a "Minor" Spill

1. Identify the source of the spill and the direction in which the spill is heading.

2. Attempt to stop the spill at the source. Where applicable, the source of the spill shall be taken out of service until repairs can be made. If the spill is related to a fuel dispensing system, activate the Emergency Shut-Off (ESO) switch to prevent additional fuel disbursements.

3. If material is released outside a containment area, it is crucial that the material be contained as quickly as possible. Following proper safety procedures, use absorbent materials or diking to contain the spill. Prevent the spill from reaching storm drains, sanitary sewers, or open water. If a spill is flowing toward a drain, install temporary diking around the drain, block off the drain with a drain cover, or place absorbent material around the drain to prevent a discharge.

4. Once the spill has been stopped and contained, estimate the quantity of the spill. Consult applicable Safety Data Sheet (SDS) for material compatibility and environmental precautions. Note and follow recommendations regarding special precautions, spill response equipment, methods, or precautions. All cleanup work shall be conducted in accordance with existing safety protocols and SDS recommendations. Contact the facility Superintendent/Supervisor, or designee, for assistance if needed.

5. Recover or clean up the spilled material as much as possible. Material that cannot be reused must be discarded in accordance with state and federal regulations. Liquids absorbed by porous materials (e.g., wood, gravel, significant quantities of absorbent material, etc.) shall be placed into US DOT-approved 30-gallon or 55-gallon steel drums. Following cleanup, the container shall be secured and appropriately labeled to identify the contents and the date of the spill/cleanup. Containers shall be stored indoors and provided with secondary containment until transported off-site for disposal.

6. For spills that do not involve flammable liquids or other potential hazardous wastes, small quantities of used absorbent materials may be double bagged and disposed of along with municipal trash as long as all liquids have been absorbed (no free liquid may be present).

7. If the spilled material is a flammable liquid, corrosive liquid (pH ≤ 2 or ≥ 12.5), or other potential hazardous waste, all recovered product, impacted material, and used absorbent must be placed into a US DOT-approved containers/drums. Following cleanup, the container(s) shall be secured and appropriately labeled to identify the contents and the date of the spill/cleanup. Containers shall be stored indoors and provided with secondary containment until transported off-site for disposal. The facility Superintendent/ Supervisor, or designee shall be notified that a potential hazardous waste was released and that a waste characterization may be needed to facilitate proper disposal.

8. Surfaces that are contaminated by the spill shall be cleaned utilizing dry absorbent material. Tools and equipment that have been used in the cleanup must be decontaminated immediately after use. Decontamination water (if used) must be minimized, containerized, and disposed of properly.

9. If waste requires disposal, notify the facility Superintendent/Supervisor, or designee who will arrange for the proper characterization and disposal of any waste material. Representative sampling and analysis may be necessary to properly characterize the waste. The waste must be transported and disposed of in compliance with all applicable laws and regulations. Waste manifests, trip tickets, or bills of lading (if required) for waste disposal shall be kept on file.

10. Facility personnel shall restock/replace spill response equipment and absorbent materials used during the clean-up efforts.

11. The facility Superintendent/Supervisor, designee, or other appropriate County personnel shall be notified of the spill in accordance with ***Section D*** of this document.

C. Response to "Major" Spill

A "Major" spill is any discharge that does not meet the definition of a "Minor" spill. Any employee or contractor observing, being involved with, or recognizing a potential or actual spill of oil or other hazardous material, other than a "Minor" spill is responsible for performing the following actions:

1. If there is no danger to human health, attempt to stop and contain the spill at the source. If the spilled material is unknown, if PPE other than that which is typically used in your work area, is necessary to approach the spill area, or if assistance is required to stop the spill, do not attempt to contain the spill. If the spill is related to a fuel dispensing system, activate the Emergency Shut-Off (ESO) switch.

2. Most County employees lack the appropriate training to respond to "Major" spills. If the spill is of an unknown substance, is of a quantity that cannot be safely managed, or poses other risks beyond the training level of the employee, the employee should not attempt to contain or clean up the spill.

3. Evacuate individuals from the area and keep personnel away from the impacted area.

4. Immediately notify the facility Superintendent/Supervisor, or designee of the incident. The notified individual will determine the need for further evacuations and contact emergency response personnel (911), as necessary. *If a situation represents an immediate and grave danger to personnel, the public, structures, or other infrastructure, the individual discovering the incident may call 911 directly without first notifying facility management.*

5. The facility Superintendent/Supervisor or designee will determine if assistance from emergency response contractors is required to clean up the incident and will coordinate such spill response efforts with spill response contractors and other County agencies and first responders.

6. Facility personnel will provide assistance to emergency responders, as appropriate.

D. Reporting a Spill (Internal Notifications)

1. Once a spill is contained and cleanup operations have been initiated, the individual discovering the spill shall notify the appropriate County representatives and provide the following information:

    a) Identify the location, date, and time of the incident;
    b) Identify the type of material spilled or discharged;
    c) Estimate the quantity spilled and the rate of the spill;
    d) Identify the cause of the spill or discharge;
    e) Identify impacted media or infrastructure (soil, storm drains, open water bodies, etc.);
    f) Determine the extent of injuries involved; and
    g) Provide response measures implemented by the facility personnel.

E. Reporting a Spill (Regulatory Notifications)

State of Maryland Reporting Requirements (COMAR 26.10.01.05)

1. Upon discovery of a spill, the Responsible Person shall notify the MDE Emergency Response Division **within two (2) hours** by calling 866-633-4686. The caller shall be prepared to provide the following information:

    a) The time and date of the spill;
    b) The location and cause of the spill;
    c) The mode of transportation or type of facility involved;
    d) Type and quantity of oil spilled;
    e) Details regarding any assistance required;
    f) The name, address, and telephone number of the person making the report; and
    g) Any other pertinent information requested by the Department.

2. MDE will provide further guidance on additional responsibilities.

3. Within **ten (10) working days** of the completed removal and clean-up activities, the Responsible Person shall prepare a report using either County letterhead detailing the incident. The report shall contain the following:

    a) Date, time, and place of the spill;
    b) The amount and type of oil or hazardous substance spilled;
    c) A complete description of circumstances that contributed to the spill;
    d) A complete description of the containment and removal operations performed, including disposal sites to which oil refuse was transported;
    e) Procedures, methods, and precautions instituted to prevent the recurrence of an oil spill from the facility involved;
    f) Any other information considered necessary or required by the MDE for a complete description of the incident; and
    g) A certification that the information provided is true and correct to the knowledge of the person signing the report.

4. The completed report shall be submitted to mdeerd.mema@maryland.gov or faxed to 410-537-3932.

5. A digital copy of the completed report and any accompanying documentation shall be retained

Federal Reporting Requirements - National Response Center (40 CFR 110)

1. If any of the following criteria are met the Responsible Person shall notify the National Response Center (NRC) **within two (2) hours** of the spill discovery by calling 800-424-8802 or 202-426-2675.

    - ❖ The spill has caused a film, sheen, or discoloration of the surface water or shorelines;
    - ❖ The material spilled will violate applicable water quality standards (surface water or groundwater); or
    - ❖ The spill has caused a sludge or emulsion to be deposited beneath the surface of the water or on the shoreline.

2. At a minimum, the following information shall be provided to the NRC:

    a) Name, organization, and telephone number of reporting party;
    b) Name and address of the responsible party;
    c) Date, time, and location of the incident;
    d) Source and cause of the discharge;
    e) Type of material(s) discharged;
    f) Quantity of materials discharged;
    g) Danger or threat posed by discharge;
    h) Number and types of injuries (if any);
    i) Weather conditions at the incident location; and
    j) Other information to help emergency personnel respond to the incident.

3. If unable to report to the NRC, reports can be made to the EPA Regional Office at 800-438-2474 or the U.S. Coast Guard (USCG) at 202-372-1001. The NRC, EPA, or USCG will provide further guidance.

4. A digital record of the NRC notification and any accompanying documentation shall be retained on-site.

Federal Reporting Requirements - EPA Regional Administrator (40 CFR 112.4)

1. If the facility where the spill occurred is regulated under 40 CFR 112 and is required to have a Spill Prevention, Control, and Countermeasures (SPCC) Plan, the Responsible Person shall report the spill to the EPA Region III Administrator when any of the following criteria are met:

   - ❖ More than 1,000 gallons of oil is discharged to navigable waters or adjoining shorelines in a single incident; or
   - ❖ More than 42 gallons of oil is discharged to navigable waters or adjoining shorelines in each of two incidents occurring within any twelve-month period.

2. The report shall be made in writing **within 60 days** of the spill and shall contain:

   a) Name and location of the facility;
   b) Owner/operator name;
   c) Maximum storage/handling capacity of the facility and normal daily throughput;
   d) Corrective actions and countermeasures taken;
   e) Adequate description of the facility including maps, and flow diagrams;
   f) Cause of the discharge to navigable waters, including a failure analysis;
   g) Additional preventative measures taken or planned to minimize discharge reoccurrence; and
   h) Other information required by the EPA Regional III Administrator.

3. The report shall be submitted to the EPA Regional Administrator at the following address:

   EPA Regional Administrator
   US EPA Region 3
   1650 Arch Street (3RA00)
   Philadelphia, PA 19103-2029

4. A copy of the report shall be retained in the facility SPCC Plan.

Appendix D

Training Records

GOOD HOUSEKEEPING PLAN (GHP)
TRAINING ATTENDANCE LOG

FACILITY NAME: _____

DATE	NAME *(PRINT)*	SIGNATURE

By signing I affirm that I have completed the required annual training; and I am aware of and understand my responsibilities under this Plan.

GOOD HOUSEKEEPING PLAN (GHP)

Bynum Pumping Station
503 Bynum Road
Bel Air, MD 21015

June 30, 2025

TABLE OF CONTENTS

1.0 BACKGROUND & INTRODUCTION 1
1.1 Objectives 1
1.2 Potential Stormwater Pollutants 1
2.0 RESPONSIBILITIES 3
2.1 GHP Implementation 3
2.2 Plan Review and Modification 3
2.3 Inspections 3
2.3.1 GHP Site Inspections 3
2.3.2 Conveyance System Inspections 4
2.4 Training 4
3.0 BEST MANAGEMENT PRACTICES (BMPs) 5
3.1 Applicability of BMP Fact Sheets 5
3.2 BMP Fact Sheets 5

List of Tables

TABLE 1-1 POTENTIAL STORMWATER POLLUTANTS AND THEIR SOURCES 2

List of BMP Fact Sheets

GH-01 - Waste Management
GH-02 - Vehicle and Equipment Storage
GH-03 - Vehicle/Equipment Refueling
GH-04 - Vehicle Maintenance
GH-05 - Vehicle/Equipment Washing
GH-06 - Material Storage
GH-07 - Aboveground Storage Tanks
GH-08 - Resident Drop-Off Centers
GH-09 - Stockpiles
GH-10 - Deicing Materials

Appendices

Appendix A: GHP Site Inspection Checklist
Appendix B: GHP Stormwater Conveyance Inspection Checklist
Appendix C: General Spill Response Procedures
Appendix D: Training Records

List of Acronyms

AST	-	Aboveground Storage Tank
BMP	-	Best Management Practice
CFR	-	Code of Federal Regulations
GHP	-	Good Housekeeping Plan
MDE	-	Maryland Department of the Environment
MS4	-	Municipal Separate Storm Sewer System
NPDES	-	National Pollutant Discharge Elimination System
SPCC	-	Spill Prevention, Control, and Countermeasure Plan

1.0 BACKGROUND & INTRODUCTION

Polluted stormwater runoff has the potential to enter the County's storm sewer systems (referred to as a municipal separate storm sewer system or MS4), and then discharge, untreated, into local water bodies. To address this potential stormwater pollution, the County is required to obtain a NPDES permit from the Maryland Department of the Environment (MDE). The NPDES Permit requires the County to take actions to prevent stormwater pollution, maintain storm sewer systems, monitor stormwater discharges, and develop and implement comprehensive management programs to minimize the discharge of pollutants from the storm sewer system.

To comply with Part IV.D.4.b of the County's Phase I MS4 Permit, the County must develop, implement, and maintain a Good Housekeeping Plan (GHP) for certain County-owned properties not required to be covered under Maryland's General Permit for Discharges from Stormwater Associated with Industrial Activities *(General Permit 12-SWA / 20-SW).*

To support this effort, a *"Good Housekeeping Plan Applicability Certification"* has been developed to evaluate and document if a specific County-owned facility is subject to the GHP requirements. The *"GHP Applicability Certification"* includes the following ten (10) potential stormwater polluting activities. If any of the covered activities are performed at the facility, then that facility is required to implement a site-specific GHP. The GHP will include each of the potential stormwater polluting activities identified in the *"GHP Applicability Certification"* and corresponding pollution prevention procedures.

- Waste Management
- Vehicle and Equipment Storage
- Vehicle/Equipment Refueling
- Vehicle Maintenance
- Vehicle/Equipment Washing
- Material Storage
- Aboveground Storage Tanks
- Resident Drop-Off Center
- Stockpiles
- Deicing Materials

1.1 Objectives

The GHP was developed to outline suitable practices, procedures, and protocols, or Best Management Practices ("BMPs") for reducing and/or preventing stormwater pollution associated with operations at covered County-owned properties. The intent of the pollution prevention procedures included in the GHP is to limit the release of materials with the potential to impact stormwater, this includes reducing or eliminating (to the extent practical):

- The occurrence of spills and leaks;
- The accidental dumping or release of materials;
- The accumulation of waste, trash, debris, unused parts/equipment, etc.;
- The exposure of hazardous materials to precipitation/run-off;
- Stormwater run-off contamination by improperly stored materials; and/or
- Illicit discharges to the storm drain system.

1.2 Potential Stormwater Pollutants

Table 1-1 on the following page provides a list of common potential pollutants that may result from the GHP-regulated activities identified above. Understanding the sources of these pollutants can help in achieving the goals and objectives of the GHP program.

TABLE 1-1 POTENTIAL STORMWATER POLLUTANTS AND THEIR SOURCES

		Waste Management	Vehicle/Equipment Storage	Vehicle/Equipment Refueling	Vehicle Maintenance	Vehicle/Equipment Washing	Material Storage	Aboveground Storage Tanks	Resident Drop-Off Center	Stockpiles	Deicing Materials
Pollutants	**Sources**	**Associated GHP Activity**									
Sediment	Land disturbance; erosion; paved surfaces; material stockpiles; waste storage; salt/abrasive application	X				X	X		X	X	X
Hydrocarbons *(petroleum compounds)*	Leaking vehicle and equipment; vehicle and equipment cleaning; spills; improper storage; maintenance activities; scrap metal disposal; improper disposal	X	X	X	X	X	X	X	X		
Metals	Vehicle brake and tire wear; vehicle/equipment exhaust; batteries; galvanized metal; paint and wood preservatives; fuels, pesticides, and cleaners; vehicle fueling, maintenance, and washing; industrial waste	X	X	X	X	X	X	X	X		
Toxic Chemicals	Pesticide application; improper chemical storage; leaks and spills from storage containers; leaking vehicles; maintenance activities	X	X		X	X	X	X	X		
Chlorides	De-Icing chemicals										X
Trash/Debris	Improper waste storage and disposal; leaking trash containers; littering; poor housekeeping	X	X				X		X		
Nutrients (nitrogen and Phosphorus)	Fertilizers; malfunctioning septic systems; sewer overflows; animal/pet waste; vehicle washing; decaying grass and leaves; leaking trash containers; atmospheric deposition	X				X	X		X		

2.0 RESPONSIBILITIES

2.1 GHP Implementation

A separate GHP is required for each covered facility. The following individual *(identified by name and/or title)* is accountable for the administration and implementation of the GHP at this facility and has the authority to commit the necessary resources to implement this Plan.

_____

Name and/or Title of Responsible Person

The Responsible Person listed above shall ensure that facility personnel involved in any GHP-covered activities identified in this Plan, are provided with access to, and are familiar with, the contents of this Plan.

2.2 Plan Review and Modification

The *"GHP Applicability Certification"* completed for this facility must be reviewed and updated once every permit term, or within one (1) year of substantial changes to a facility's operations that could reasonably contribute to stormwater pollution. Any newly constructed/acquired facility must be assessed within one (1) year of initiating operations at the facility. The facility's GHP must be amended and reissued to the facility within one (1) year of any changes to the facility's *"GHP Applicability Certification"*.

When warranted, the BMP Fact Sheets provided in Section 3.0 may need to be updated or revised. At the same time, additional BMP Facts Sheets may be added. The need for such updates or modifications will be at the discretion of the County's GHP Program Administrator.

2.3 Inspections

The County's MS4 permit requires each facility covered by a GHP to have the following:

1. Written procedures for annually assessing County properties to prevent the discharge of pollutants, spills, and leaks into the County's storm sewer system; and

2. Written procedure for performing stormwater conveyance system inspections and for removing debris that may cause clogging, backups, and flooding.

To meet these requirements, each facility that is covered by a GHP will be required to complete routine site inspections and stormwater conveyance system inspections as detailed below. Facility management will be responsible for ensuring the necessary inspections are completed within the required timeframes, that corrective actions (if needed) are performed, and that records of inspections and completed corrective actions are maintained for at least five (5) years.

2.3.1 GHP Site Inspections

The GHP Site Inspection will be performed to ensure that each GHP-covered facility is being properly maintained and that there are no visible signs of pollutants entering the stormwater system. GHP facilities shall utilize the *"GHP Site Inspection Checklist"*, provided in ***Appendix A*** to complete the required inspection. At a minimum, each facility is to be inspected every five (5) years.

2.3.2 Conveyance System Inspections

Stormwater conveyance systems are generally comprised of curbs and gutters, catch basins, inlet structures, swales, channels, piping, culverts, detention ponds, outfalls, or other structures that are used to collect, contain, and convey stormwater runoff.

The unimpeded movement of stormwater through conveyance systems is critical in avoiding backups and flooding, which can impede facility operations and damage property. Routine inspections and preventative care of stormwater conveyance systems can ensure these systems function as intended and prevent the need for costly and time-consuming repairs and retrofits.

Each GHP-covered facility is required to conduct routine stormwater conveyance system inspections to ensure the free flow of stormwater within the conveyance systems. GHP-covered facilities shall utilize the *"GHP Stormwater Conveyance System Inspection Checklist"*, provided in ***Appendix B*** to complete the required inspections. At a minimum, facility conveyance system inspections are to be conducted every five (5) years.

2.4 Training

As part of the GHP requirements within the County's Phase I NPDES permit, annual training must be provided to all appropriate staff and contractors. Such training shall be provided to any individuals responsible for implementing the GHP, performing the required inspections, or involved in any of the GHP-covered activities identified in this Plan. The required training shall focus on the duties and responsibilities assigned to site personnel in implementing the GHP and the best management practices (BMPs) prescribed in this Plan for preventing, reducing, and eliminating the discharge of pollutants during facility activities.

The County's MS4/GHP Program Coordinator will be responsible for developing the required training and disseminating it to GHP-covered facilities. Each GHP-covered facility will be responsible for identifying staff/contractors who must attend annual training, ensuring identified staff complete the required training, and maintaining records that document training dates and attendees. Training records and other documentation shall be maintained in ***Appendix D*** of this Plan.

3.0 BEST MANAGEMENT PRACTICES (BMPs)

This section contains a BMP Fact Sheet for each of the ten (10) GHP-regulated activities. The County's operations are not limited to the BMPs contained within this document; nor is the County required to implement all of the pollution prevention measures identified within each BMP Fact Sheet. The County should select and implement those measures that are applicable and have the greatest potential for reducing stormwater pollution.

The BMP Fact Sheets contained within this document offer recommended protocols for a particular activity. These pollution prevention measures are considered non-structural BMPs with a focus on source control of potential pollutants.

3.1 Applicability of BMP Fact Sheets

The *"GHP Applicability Certification"* completed for this facility has identified the activities conducted at this facility that require coverage under this Plan. Each of the BMP Fact Sheets shall be marked as to whether they are applicable or not applicable to this facility. The Applicable/Not Applicable indicator on each BMP Fact Sheet can be revised in response to changes in operations at the facility.

3.2 BMP Fact Sheets

BMP Fact Sheets can be found on the following pages. For the sake of consistency, the general outline of a BMP Fact Sheet will be as follows:

- Identification of GHP-covered activity.
- Applicability of the BMP Fact Sheet to the facility.
- A general description of the concern the activity poses to stormwater.
- Recommended pollution prevention measures for reducing/eliminating stormwater pollution.
- Additional sources of information, if applicable.

WASTE MANAGEMENT

Not Applicable ☒ Applicable ☐

CONCERN

Improperly managed waste can allow trash and debris to be washed into storm drains which poses a concern to water quality, marine life, and public health. It also has the potential to create obstructions in the drainage system, which can lead to backups and flooding. Additionally, improper storage and handling of waste materials can allow pollutants including oils and greases, toxic and chemical compounds (including nutrients), bacteria, metals, and other potentially hazardous wastes to enter waterways.

POLLUTION PREVENTION MEASURES

General *(applicable to all waste management activities)*

1) Provide suitable containers, preferably with working covers, to collect waste materials.
2) Ensure that appropriate waste containers are available in areas where waste is generated.
3) Provide a cover over waste storage areas, if feasible.
4) Avoid positioning waste receptacles near storm drains, water bodies, or areas of concentrated runoff.
5) Ensure that lids to waste containers *(if present)* are kept closed to prevent the intrusion of precipitation and prevent trash from blowing out of the receptacle.
6) For waste receptacles, which do not have lids and could leak, containers should be inspected regularly and controls (e.g., containment, spill response, etc.) shall be enacted whenever leaks or dry-weather discharges are observed.
7) Routinely inspect waste containers, roll-offs, compactors, and other waste receptacles for the presence of excessive waste accumulation and overflowing containers.
8) Ensure that wastes accumulating on the ground are placed in a suitable waste container.
9) Ensure that wastes are removed from the facility regularly by a licensed and contracted vendor.
10) Repair or replace damaged waste container lids.

Trash Compactors

1) Routinely inspect trash compactors for malfunctioning equipment or leaking hydraulic oil and provide the appropriate spill response if leaking equipment is encountered.
2) Regularly inspect compactors for leaking fluids and implement appropriate controls such as spill response/cleanup, collection or diversion of released fluids, providing secondary containment, etc. whenever leaks or dry-weather discharges are observed.

Scrap Metal Collection Containers

1) Avoid placing oily or grease-covered items in uncovered scrap metal recycling collection containers. If needed, wrap oily/greasy items in plastic garbage bags before placing them in the collection container.

Hazardous/Universal Wastes

1) Ensure that hazardous waste and universal wastes (e.g., batteries, bulbs, etc.) are collected and stored indoors or within covered collection containers.
2) Verify that hazardous/universal waste collection containers are in good condition, not leaking, and compatible with the wastes being stored.

Street Sweeping / Vactor Truck Material Storage

1) Do not site storage areas near storm drains, open water bodies, or areas of concentrated runoff.
2) Install sediment control devices (e.g. silt fence, silt socks, hay bales, etc.) around the staging area. Inspect these controls regularly and replace them as needed.
3) Cover the materials staging area, if feasible.
4) Provide oil-absorbent booms if necessary to control oily discharge. Inspect and replace booms regularly.
5) The staging area should be checked periodically for evidence of sediment migrating outside of the staging area. Material that has migrated out of the staging area should be promptly swept and returned to the staging area or disposed of.

Waste Cooking Oil/Grease

1) Maintain storage containers indoors or within a covered location, if feasible.
2) Storage containers shall be secured to prevent infiltration of precipitation and accidental/intentional spills or releases.
3) Carefully transfer waste oil/grease to the appropriate collection container to avoid spills.
4) Maintain suitable spill response equipment near collection containers. Immediately clean up any spilled oil/grease. Keep the exterior of the collection container clean and free of spilled oil/grease.
5) Provide secondary containment for collection containers, if feasible.

VEHICLE AND EQUIPMENT STORAGE

Not Applicable ☒ Applicable ☐

CONCERN

Vehicles and equipment may be stored onsite to support various County operations (e.g., construction, maintenance, snow removal, roadside assistance, mass transit, mowing, etc.). Examples of County owned and operated vehicles and equipment stored onsite at any given time include but are not limited to, the following: cars, trucks, buses, emergency response vehicles, garbage trucks, heavy equipment (backhoes, frontend loaders, etc.), forklifts, towable generators, portable light stands, and roadside equipment. Vehicle and equipment storage is considered a pollutant source due to the potential for incidental releases of petroleum products, lubricants, and various automotive fluids.

POLLUTION PREVENTION MEASURES

1) When possible/practical, store vehicles and equipment inside or under cover to prevent exposure to precipitation.
2) If vehicles or equipment must be stored outside, store vehicles/equipment in designated areas away from areas of concentrated runoff, storm drains, and other stormwater conveyances.
3) Vehicles and equipment shall be staged on impervious (asphalt or concrete) surfaces;
4) Keep truck beds clean and ensure potential stormwater pollutants are stored in closed containers, covered, or otherwise protected from stormwater exposure.
5) Conduct routine visual inspections of vehicles and equipment for the presence of leaks and respond accordingly.
6) Leaking vehicles/equipment should be moved inside or under cover. At a minimum, drip pans or absorbent pads shall be used to contain the leak until the vehicle/equipment can be relocated and the leak addressed.
7) Drain all fluids from wrecked or heavily damaged vehicles and equipment before storage.
8) Have an adequate supply of appropriate spill response equipment readily available and clean up all spills and leaks immediately utilizing dry cleaning techniques (e.g. absorbents and brooms).
9) Train staff in spill response so that incidents are addressed in a timely fashion.
10) Do not wash down areas where leaks have collected on ground surfaces; use dry cleaning methods such as granular absorbents and brooms.

VEHICLE AND EQUIPMENT REFUELING

Not Applicable ☒ Applicable ☐

CONCERN

Refueling activities associated with County vehicles and equipment can result in a discharge of fuel (gasoline and diesel fuel), which has the potential to enter the storm drain system and/or a nearby waterway. Such releases can introduce hydrocarbons, metals, and other toxic chemicals to stormwater runoff.

POLLUTION PREVENTION MEASURES

General Procedures *(applicable to all refueling activities)*

1) Routinely *(at least daily)* inspect the fuel dispensing area for any spills or leaks.
2) Routinely inspect fuel dispensing equipment looking for leaking or damaged equipment. Damaged or malfunctioning equipment shall be taken out of service until it has been repaired.
3) Fuels will only be dispensed into authorized vehicles, equipment, and approved containers.
4) Vehicle operators must remain outside of their vehicles and in attendance of fuel dispensers at all times while dispensing fuel.
5) Third-party contractors must be trained in proper refueling procedures and pollution prevention.
6) Do not utilize a foreign object to keep the dispenser nozzle in the open position. If present, a “hold-open” latch on the nozzle may be used.
7) Do not “top off” a vehicle’s fuel tank once the dispenser nozzle’s automatic shut-off has been activated. Topping off tanks may result in spills. Post signs in fueling areas warning vehicle operators against "topping off" of vehicle fuel tanks.
8) After refueling has stopped, allow several seconds to pass before removing the nozzle and returning it to the dispenser. This will prevent incidental dripping from the nozzle.
9) Employees refueling vehicles shall note the location of the “Emergency Fuel Shut Off” switch, to be used to stop the flow of fuel to the dispensers in the event of a release or emergency.
10) Have an adequate supply of appropriate spill response equipment readily available and clean up all spills immediately utilizing dry cleaning techniques (e.g. absorbents and brooms).
11) Immediately clean up and dispose of used absorbent material.
12) Do not wash down fueling areas; use dry cleaning methods such as granular absorbents and brooms.
13) Conduct refueling activities over impervious (e.g. concrete) surfaces. Place drip pans or absorbent pads under the nozzle if fueling occurs over a permeable surface such as grass or soil.
14) Install oil control devices in storm drains that may receive contaminated runoff from fueling areas.
15) Cover fueling areas with a canopy or roof to prevent direct contact with rainfall. Direct run-on away from fueling areas and collect fueling area run-off in a dead-end sump or oil-water separator.

Mobile Equipment Refueling

1) Refuel equipment on an impervious surface, downgradient of, and at the farthest practical distance from any storm drain, stormwater conveyance, stormwater management feature, or waterway.
2) Utilize secondary containment when refueling equipment (when practical).
3) Ensure mobile refuelers are parked in designated locations and away from areas of concentrated run-off, storm drains, and other stormwater conveyances.
4) Ensure that procedures are in place and that staff is properly trained in spill response/cleanup so that leaks and spills are addressed appropriately and promptly.

VEHICLE MAINTENANCE

GH-04

Not Applicable ☒ Applicable ☐

CONCERN

Vehicle and equipment maintenance can impact the water quality of nearby waterways by exposing stormwater to various pollutants including petroleum hydrocarbons, solvents, antifreeze/coolants, used oil, lubricating oil, grease, brake fluid, metals, and various chemicals. Additionally, vehicles that are wrecked or awaiting repair can be a source of pollution if leaking fluids are not properly controlled.

POLLUTION PREVENTION MEASURES

1) Conduct vehicle and equipment maintenance activities indoors.
2) Make sure incoming vehicles and equipment are inspected for leaking fluids and oil.
3) Move leaking vehicles or equipment indoors or under cover as soon as possible. At a minimum, a drip pan or absorbent pads shall be utilized to contain the leak until the vehicle/equipment can be relocated and the leak addressed.
4) Avoid performing maintenance on vehicles in close proximity to exterior doorways, which may allow released fluids to migrate outdoors.
5) Have an adequate supply of appropriate spill response equipment readily available and clean up all spills and leaks immediately utilizing dry cleaning techniques (e.g. absorbents and brooms).
6) Keep maintenance areas neat and well organized. Remove dirt, debris, and used absorbent regularly.
7) Inspect maintenance areas as well as maintenance equipment on a routine basis.
8) Store vehicles, parts, and generated wastes indoors or off the ground and under cover whenever possible. When practical, provide secondary containment.
9) Promptly transfer used fluids to the proper waste container; do not leave full drip pans or other open containers around the shop. Empty and clean drip pans and containers regularly.
10) Waste liquids shall not be poured into floor drains, sinks, outdoor storm drain inlets, or other storm drains or sewer connections. Liquid wastes are to be collected in properly labeled containers and disposed of by a licensed waste hauler or other appropriate method.
11) Store leaking batteries in a sealed container and provide secondary containment, if feasible.
12) Clean all parts indoors utilizing a self-contained parts washer.
13) Do not hose down indoor service areas to storm drains or areas where it can seep into groundwater.
14) Maintain floor drains in good working order and inspect for proper function on a routine basis. Consider plugging floor drains that discharge to the storm sewer.
15) Ensure oil/water separators (if present) are maintained in proper working order and are checked on a routine basis for the presence of oil.
16) If maintenance work must be performed outdoors, adhere to the following requirements:
    - Conduct maintenance activities over an impervious surface, away from stormwater inlets.
    - Cover outdoor maintenance areas and direct stormwater run-on away from the area.
    - Use drip pans or drop cloths underneath the equipment to catch leaks and drips.
    - Have an adequate supply of appropriate spill response equipment readily available.
    - Clean all spills immediately using dry cleaning techniques (e.g. absorbents and brooms).
    - Avoid performing maintenance activities during precipitation events.
    - Limit temporary outdoor maintenance activities to a single shift/day if additional time is needed to cover the work area at the end of each day/shift.

BMP Fact Sheet

VEHICLE AND EQUIPMENT WASHING

GH-05

Not Applicable ☒ Applicable ☐

CONCERN

Vehicle and equipment washing can generate washwater that contains oil, grease, organic compounds, surfactants, phosphates, metals, and suspended solids. If vehicles/equipment are washed outdoors on impervious surfaces, dirty washwater can contaminate stormwater that ends up in waterways. Washing equipment over pervious surfaces can allow washwater to seep into the ground contaminating groundwater.

POLLUTION PREVENTION MEASURES

1) Vehicle and equipment washing should only be conducted in designated indoor wash bays that capture and recycle washwater to the extent practical.
2) Wastewater from the washing facility should be discharged to the sanitary sewer system under the authorization of a wastewater discharge permit issued by the local municipal authority.
3) The floor of indoor vehicle wash bays should be completely bermed or sloped to collect wash water and prevent migration outdoors.
4) No other activities (e.g., fluid changes, repairs, material storage) shall be performed in wash areas.
5) Keep the wash bay neat and well organized. Sweep or pick up all trash and debris daily or as needed.
6) Solid materials accumulated on vehicles or in vehicle beds (e.g. salt, soil, grass, etc.) shall be knocked off or otherwise removed from the vehicle (while inside the wash bay) prior to washing. Solid materials shall be collected and disposed of properly.
7) For vehicles too large to completely fit in the wash bays, only the portion of the vehicle physically located in the confines of the wash bay shall be cleaned. The vehicle shall then be rotated to allow for the remaining portion of the vehicle to be washed.
8) Use nozzles that automatically turn off water when not in use and consider high-pressure, low-volume sprays.
9) Avoid detergents as much as possible. If detergents are necessary, use a biodegradable, phosphate-free detergent.
10) If discharging to an oil-water separator, use a non-emulsifying detergent.
11) Inspect floor drain systems, holding tanks, and conveyances associated with designated wash areas regularly. Maintain oil/water separators and/or process flowthrough separators on a routine basis.
12) Use commercial car washes when vehicle or equipment washing cannot be performed onsite without causing impacts to stormwater.
13) If washing must occur onsite and outdoors, use a designated impervious area that is marked with posted signs indicating proper washing procedures. This area must be bermed to contain the wash water and graded to direct the wash water to the sanitary sewer, an oil-water separator, a holding tank, a dead-end sump, or other containment area. Captured water shall be disposed of properly.
14) Avoid steam cleaning and engine/undercarriage washing which can produce high pollutant concentrations. If steam cleaning or engine washing is necessary, perform such cleanings within isolated indoor areas, and ensure wash water is treated and discharged to the sanitary sewer (if permitted to do so) or captured for off-site disposal.
15) Train staff in proper washing techniques and how to confine washing to designated wash areas.
16) Consider alternatives to washing such as using air to blow grass and debris from small equipment, wet-wiping equipment with rags, etc.

BMP Fact Sheet

MATERIAL STORAGE

GH-06

Not Applicable ☒ Applicable ☐

CONCERN

The storage of petroleum products, chemicals, paints, cleaners, pesticides, fertilizers, bags of erodible materials like sand, cement, and soil, and other potential pollutants can negatively impact surface waters through the accidental releases or leaching of materials into stormwater. Unprotected outdoor storage areas can generate a wide range of stormwater pollutants, such as sediment, nutrients, toxic materials, and petroleum products.

POLLUTION PREVENTION MEASURES

1) Whenever possible, store containers (e.g. drums, bins, bags, cans, and totes) indoors or under cover to limit exposure to stormwater.
2) Designate specific areas for material delivery and storage that are away from heavy traffic areas, storm drains, stormwater conveyances, and areas of concentrated run-off.
3) Designated outdoor storage areas should be paved or consist of an impervious surface.
4) Provide secondary containment for materials whenever possible or required per regulation.
5) Store materials on pallets to prevent stormwater run-on from coming into contact with materials, prevent container corrosion, and allow for better leak detection. Pallets must be in good condition and promptly replaced once damaged or deteriorated.
6) Stack containers according to the manufacturer's recommendations to avoid damage.
7) Immediately replace damaged, corroded, or leaking containers.
8) Ensure all storage containers are clearly labeled with their contents.
9) Keep containers tightly sealed after use.
10) Maintain an accurate inventory of hazardous substances and limit on-site storage to that which is necessary to support facility operations.
11) Keep storage areas neat and well organized; remove debris and unneeded material promptly.
12) If empty drums are stored outdoors, ensure that all openings are equipped with caps to prevent water intrusion and that the drum/storage area is labeled "Empty Drums".
13) Have an adequate supply of appropriate spill response equipment readily available and clean up all spills and releases immediately utilizing dry cleaning techniques (e.g. sweeping/absorbents).
14) Clean up all migrating dry materials upon discovery and address the source of the release.
15) Provide perimeter controls (e.g., berms, rock check dams, etc.) for erodible stockpiles of materials such as mulch, sand, and gravel to prevent migration into the stormwater system.
16) Routinely inspect material storage areas for leaks, material migration, and damaged or corroded containers. Ensure that secondary containment and other perimeter controls are in satisfactory condition.
17) Additional visual inspections of outdoor storage areas should be conducted after significant rainfall events (i.e., greater than 0.5 inches).

BMP Fact Sheet

ABOVEGROUND STORAGE TANKS

GH-07

Not Applicable ☐ Applicable ☒

CONCERN

Aboveground storage tanks (ASTs) may be used to store fuels, automotive fluids, chemicals, or deicing fluids. Leaks from tanks, piping, or other equipment and releases during fluid transfers can all impact stormwater quality. It is critical to maintain ASTs in good working condition to prevent spills and/or releases from occurring. Improperly managed storage tanks can cause significant environmental impacts.

POLLUTION PREVENTION MEASURES

General *(applicable to all storage tanks)*

1) ASTs should be installed and maintained in accordance with COMAR 26.10 and applicable fire codes.
2) ASTs should be provided with secondary containment, whenever feasible or required by regulation.
3) Secondary containment areas shall be maintained clean and dry; drain valves must be kept closed; accumulated liquid shall only be discharged if there are no visible signs of impacts, and in accordance with applicable regulations.
4) Inspect ASTs monthly to identify any leaking or malfunctioning equipment and ensure tanks are functioning as designed.
5) ASTs shall be equipped with a form of liquid-level detection (i.e. sight gauge, electronic monitoring).
6) ASTs shall be equipped with overfill prevention (i.e. overfill alarm and/or overfill prevention valve).
7) Tanks and piping should be protected from vehicle impact via barriers, bollards, guard rails, etc.
8) Install ASTs on solid foundations over impervious surfaces, and away from areas of concentrated run-off, storm drains, and other stormwater conveyances.
9) Properly label all storage tanks (e.g., contents, capacity, etc.).
10) Keep remote fills and fill port spill buckets clean and dry.
11) Keep fill ports, gates, and tank areas secured when not in use to prevent fuel theft and tampering.
12) Have an adequate supply of appropriate spill response equipment readily available and clean up all spills and leaks immediately utilizing dry cleaning techniques (e.g. absorbents and brooms).
13) Facilities that maintain 1,320 gallons or more of aboveground oil products shall prepare and implement a Spill Prevention, Control, and Countermeasure (SPCC) Plan, per 40 CFR 112.
14) Facilities that maintain 1,000 gallons or more of used oil or 10,000 gallons or more of virgin oil in ASTs shall obtain an Individual Oil Operations Permit from the MDE, per COMAR 26.10.01.09.
15) Owners/Operators of facilities that maintain more than 2,500 gallons of oil in ASTs are required to register each AST with MDE, per COMAR 26.10.01.10.

Bulk Fluid Transfers (Deliveries)

1) All bulk fluid transfer operations shall be performed under the direct supervision of knowledgeable County personnel. At no time shall the delivery vehicle or delivery vehicle operator be unsupervised.
2) The product level within the tank must be measured and available capacity verified before delivery.
3) Deliveries shall be made via fill ports equipped with catch basins to capture drips and spills.
4) Ensure an adequate supply of appropriate spill response equipment is readily available.
5) Post signs in delivery area displaying proper delivery procedures and emergency contact information.

ABOVEGROUND STORAGE TANKS

Used Oil Tanks

1) County personnel must verify the level of product in used oil tanks prior to filling.
2) Used oil tanks should only be filled via designated fill ports. Pumping used oil into the tank via a closed piping system is preferred to manually pouring used oil into the tank.

Brine Tanks

1) If multiple tanks are located onsite, the tanks should be plumbed to ensure that the complete failure of one tank will not drain all the tanks in the system (tanks must be isolated).
2) Minimize seeping and leaking at fittings by properly supporting piping and fittings, using flexible connectors or hoses to reduce stress, and installing corrosion-resistant fittings.
3) Consider placing hoses in non-permeable trenches or using drip-less nozzles to reduce repeated small spills.

RESIDENT DROP-OFF CENTER

Not Applicable ☒ Applicable ☐

CONCERN

Resident Drop-Off Centers are publicly accessible facilities where residents can drop off used automotive fluids (i.e. oil or antifreeze), municipal waste, recyclable, and/or organic waste, typically free of charge. Improper transfer or management of the waste materials can allow a number of pollutants including oils and greases, toxic and chemical compounds, nutrients, metals, and other wastes to enter waterways.

POLLUTION PREVENTION MEASURES

General *(applicable to all materials collected)*

1) Clearly identify waste materials accepted by the facility, and clearly mark designated collection areas.
2) Waste material should be inspected by a County representative, prior to disposal.
3) Avoid positioning waste receptacles near storm drains, water bodies, or areas of concentrated runoff.
4) When practical, receiving areas should be covered.
5) Do not allow containers to overflow or waste materials to accumulate on the ground.

Automotive Fluid Collection

1) Used oil, antifreeze, and automotive fluid receiving areas should be on impervious surfaces, covered, and provided with secondary containment, which shall be maintained clean and dry.
2) Provide lidded waste receptacles in the receiving area for the public to dispose of empty containers. Waste receptacles shall be emptied routinely and waste disposed of properly.
3) Collection areas shall be inspected daily and all trash and spilled liquids appropriately cleaned up.
4) The available capacity of waste liquid collection containers shall be routinely verified and waste removals scheduled, as needed.
5) Install appropriate controls to prohibit the overfilling of waste fluid collection containers.
6) Place appropriate spill response equipment in close proximity to drop-off areas.
7) If aboveground tanks are used to collect waste fluids, refer to BMP Fact Sheet GHP-07 (Aboveground Storage Tanks) for additional recommendations.

Organic Debris Collection

1) Routinely transfer collected organic debris/waste to a composting or disposal facility.
2) Do not permit composting of organic waste except at properly designed and permitted facilities.
3) Enact controls to prevent leaves and other windblown debris from entering stormwater inlets.

Municipal Waste / Recyclables Collection

1) Refer to BMP Fact Sheet GHP-01 (Waste Management) for additional recommendations.

BMP Fact Sheet

STOCKPILES

GH-09

Not Applicable ☒ Applicable ☐

CONCERN

The County may stockpile various erodible materials, the type of material can vary depending on the needs of the County. Stockpiled material may include soil, sand, millings, slag, cinders, sawdust, landscaping bark, compost, etc. Exposed stockpiles can easily erode due to wind or precipitation and contribute suspended solids to stormwater runoff.

POLLUTION PREVENTION MEASURES

1) Maintain stockpiles of erodible materials within roofed storage buildings or covered storage bins, if feasible. If not, stockpile material on an impervious surface and cover the stockpile.
2) Temporary stockpiles should be placed on an impermeable membrane (tarp) for quick clean-up.
3) Locate stockpiles away from drain inlets, catch basins, swales, areas of concentrated stormwater flow, water bodies, and environmentally sensitive areas.
4) Divert stormwater flows away from/around the stockpiles using a diversion device (e.g., temporary swale, berm, sandbags, or diversion fence).
5) Cover temporary stockpiles of erodible materials with a tarp that has been adequately secured. The covers must be in place at all times when the stockpile is not in active use.
6) When accessing a portion of the stockpile, only remove a section of the cover to minimize exposure to the elements.
7) Use barriers to isolate stockpiled materials from high-traffic areas to prevent tracking of materials.
8) Sweep (do not wash or hose down) in front of material stockpile storage areas at regular intervals, following loading and unloading activities, and during times of heavy use.
9) If material is observed migrating from the stockpile, clean up all migrated material upon discovery and provide additional controls to reduce migration from the stockpile. If such measures are ineffective implement controls to capture pollutants before they migrate off-site (e.g. silt fencing, inlet filters, filter socks, at-grade inlet protection, etc.).
10) Minimize material stockpile inventory based on historical inventory/usage records and public safety operational needs.
11) Cold mix asphalt shall be stored on and covered with plastic sheeting or comparable material.
12) Routinely inspect outdoor material stockpiles to verify existing controls are functioning properly and for signs of erosion or material transport.

BMP Fact Sheet

DEICING MATERIALS

GH-10

Not Applicable ☒ Applicable ☐

CONCERN

When salt and other de-icing materials are stored outside and uncovered, they have a much higher risk of being eroded and transported offsite by stormwater. Improper de-icing material and sand storage may result in stormwater runoff containing elevated concentrations of sodium chloride and dissolved solids. Sodium chloride (e.g., road salt) is an effective deicer but can be highly corrosive to stormwater facilities. Smaller waterways are at a higher risk to increases in salinity, which can threaten aquatic species. Additionally, runoff containing sodium chloride has the potential to reach drinking water sources where small traces can adversely impact public health.

POLLUTION PREVENTION MEASURES

1) Bagged de-icing chemicals must be stored indoors. If stored outdoors bags must be kept on pallets (off the ground) and covered at all times. Bags must be intact without holes or openings.
2) Bulk de-icing materials shall be stored under cover and on an impervious surface.
3) Bulk salt storage areas/buildings shall not be overfilled so that salt spills out beyond the entrance of the storage area/building.
4) Bulk salt storage areas/buildings shall be maintained in a structurally sound condition and in a way that prevents the release of salt and the infiltration of stormwater. Deicing materials should not touch the sides of metal storage containers.
5) Barriers such as berms, gates, knee walls, tarps, and/or straw bales shall be placed at the entrances of bulk salt storage areas/buildings to prohibit the migration of salt and prevent contact with precipitation/stormwater runoff.
6) Routinely inspect storage areas for migrating materials or deterioration of containment structures. Sweep up all migrating materials upon discovery and repair the source of the migrating pollutant.
7) Loading areas should be constructed of impervious material and covered or enclosed, to the extent practical, to reduce potential contact with stormwater.
8) Minimize the distance de-icing materials are transported during loading/unloading activities.
9) Prevent and/or minimize the spillage of salt and de-icing materials during loading/unloading activities, immediately clean spilled or tracked materials.
10) Sweeping of storage and loading/unloading areas shall be conducted immediately following loading/unloading activities.
11) Do not store de-icing materials (bulk or bagged) over or immediately adjacent to drains or waterways.
12) Control site drainage by diverting stormwater run-on away from storage/loading areas using appropriate measures (e.g., curbing, berms, etc.).
13) Slope storage/loading areas to direct salt-contaminated runoff to an appropriate collection area, and in a manner that prevents the runoff from reaching adjacent soil or surface waters.
14) Excess salt shall be removed from salt handling equipment (trucks, spreaders, etc.) following use/prior to storage. All cleaning shall occur on an impervious surface, which is sloped or curbed to contain any washwater and direct it to a collection area for recycling or proper disposal.

Appendix A

GHP Site Inspection Checklist

GOOD HOUSEKEEPING PLAN (GHP)
SITE INSPECTION CHECKLIST

Facility Name: _____ **Inspection Date:** _____

Inspector Name: _____ **Inspector Signature:** _____

- The intent of this inspection is to ensure that the site is being properly maintained and that there are no visible signs of pollutants entering the stormwater system.
- **A shaded status box designates an item in a non-compliant status. Please provide an explanation for all non-compliant items and subsequently document all corrective actions performed.**
- Retain the completed checklists for five (5) years.

Item	Status			CORRECTIVE ACTIONS/COMMENTS *Items which cannot be corrected immediately must be reported to the GHP/NPDES Program Manager*
	Yes	No	N/A	
GENERAL HOUSEKEEPING				
1. Are exterior areas of the facility free of accumulated trash, debris, and unneeded materials?				
2. Are stormwater drains and inlets free from debris, sediment, and evidence of spills/releases?				
3. Is the facility free from signs of erosion?				
4. Are paved surfaces free of accumulated sediment?				
5. Is spill response equipment available in maintenance areas, fueling areas, hazardous material storage areas, and/or other required areas?				
6. Are spill kits and absorbent materials clearly labeled and accessible (i.e. items are not piled on top of or in front of spill kits)?				
7. Are spill kits secured from being stolen or misused?				
8. Is there a labeled container present for the disposal of used spill cleanup material?				

GOOD HOUSEKEEPING PLAN (GHP)
SITE INSPECTION CHECKLIST

Item	Status			CORRECTIVE ACTIONS/COMMENTS *Items which cannot be corrected immediately must be reported to the GHP/NPDES Program Manager*
	Yes	No	N/A	
9. Does spill response equipment (i.e. spill kits, absorbent materials) need to be replenished?				
WASTE MANAGEMENT				
10. Are areas around solid waste containers/roll-offs/compactors free of excessive trash accumulation or overflowing containers?				
11. Are areas around solid waste containers/roll-offs/compactors free of visible evidence (i.e. leaks, staining) of ongoing stormwater pollution?				
12. Are scrap metal containers in good order and free from evidence of leaking oil/grease?				
13. For dumpsters, roll-offs, and other waste receptacles, where leaks are observed, have appropriate controls (e.g. containment, spill response, etc.) been enacted?				
14. Are the lids (if present) to solid waste containers closed?				
15. Is street sweeping/vactor waste being managed appropriately (i.e. no evidence of material migration)?				
16. Is waste cooking grease managed appropriately (i.e. no evidence of spilled material or excessive staining)?				
VEHICLE & EQUIPMENT STORAGE				
17. Are stored vehicles/equipment free from leaks?				
18. If leaks are present, are they being managed appropriately (drip pan or other methods in place to capture released liquids)?				
19. Are storage areas free of visible evidence of chronic leaks/spills (i.e. significant staining)?				

GOOD HOUSEKEEPING PLAN (GHP)
SITE INSPECTION CHECKLIST

Item	Status			CORRECTIVE ACTIONS/COMMENTS *Items which cannot be corrected immediately must be reported to the GHP/NPDES Program Manager*
	Yes	No	N/A	
VEHICLE & EQUIPMENT REFUELING				
20. Are the areas around refueling areas free from evidence of spills or leaks?				
21. Are refueling areas free of used absorbent material that has not been swept/cleaned up?				
22. Do fuel dispensers and hoses appear to be in good working order and well-maintained?				
VEHICLE MAINTENANCE				
23. Is there any indication that vehicle maintenance activities are being conducted outdoors?				
24. Is there any indication that vehicle maintenance activities are contributing to stormwater pollution?				
VEHICLE & EQUIPMENT WASHING				
25. If performed on-site, does all vehicle/equipment washing occur indoors?				
26. Is wash water collected and disposed of properly?				
27. Is there any indication that vehicle/equipment wash water is being released to stormwater conveyances or pervious areas?				
MATERIAL STORAGE				
28. Are all outdoor storage areas free from visible signs of leaks or spilled material?				
29. Are material storage containers in good condition?				

GOOD HOUSEKEEPING PLAN (GHP)
SITE INSPECTION CHECKLIST

Item	Status			CORRECTIVE ACTIONS/COMMENTS *Items which cannot be corrected immediately must be reported to the GHP/NPDES Program Manager*
	Yes	No	N/A	
30. Are drums, totes, and other containers (that are <u>not</u> empty) stored off the ground and covered, or stored indoors?				
31. Are liquid-containing drums/totes located outdoors provided with secondary containment?				
32. Are containers that are located outdoors equipped with closed lids except when material transfers are occurring?				
33. Are materials, which could impact stormwater, stored away from heavy traffic areas, or protected from vehicle collisions?				
34. Are chemical storage containers properly labeled?				
35. If empty drums are stored outside, are all openings equipped with caps to prevent water intrusion?				
ABOVEGROUND STORAGE TANKS				
36. Are all storage tanks, and surrounding areas free from visible signs of leaks or spilled material?				
37. Do storage tanks appear to be in good working order (e.g. free of obvious signs of damage or malfunctioning equipment)?				
38. Are remote fills associated with tanks free of liquid and debris?				
RESIDENT DROP-OFF CENTERS				
39. Are waste collection areas clearly identified?				
40. Are used oil/antifreeze collection tanks, containment structures, and surrounding areas free from visible signs of leaks or spilled material?				

GOOD HOUSEKEEPING PLAN (GHP)
SITE INSPECTION CHECKLIST

Item	Status			CORRECTIVE ACTIONS/COMMENTS *Items which cannot be corrected immediately must be reported to the GHP/NPDES Program Manager*
	Yes	No	N/A	
41. Do used oil/antifreeze collection tanks appear to be in good working order (e.g. free of obvious signs of damage or malfunctioning equipment)?				
42. Are empty used oil/antifreeze containers being collected and disposed of in the trash?				
43. Are areas around waste/recyclables containers free of excessive trash accumulation or overflowing containers?				
44. Are areas around waste/recyclables containers free of visible evidence (i.e. leaks, staining) of ongoing stormwater pollution?				
45. Are organic debris collection areas free of visible evidence of ongoing stormwater pollution (e.g. leaves and debris in stormwater conveyances)?				
STOCKPILES				
46. Are material piles, including salt, soil, sand, and millings isolated (i.e. covered, bermed, etc.) to prevent stormwater run-on and run-off?				
47. Are areas surrounding material piles (e.g. salt, soil, sand, millings, etc.) free of tracked or migrated material?				
DEICING MATERIALS				
48. Are all deicing materials stored indoors or undercover?				
49. Are salt storage structures in good condition (e.g. no evidence of material escaping or stormwater infiltration)?				
50. Is the salt loading area clean?				

GOOD HOUSEKEEPING PLAN (GHP)
SITE INSPECTION CHECKLIST

Item	Status			CORRECTIVE ACTIONS/COMMENTS *Items which cannot be corrected immediately must be reported to the GHP/NPDES Program Manager*
	Yes	No	N/A	
51. If deicing materials are tarped, is the tarp secure and covering the entire pile?				
52. Are bags of salt stored indoors, or off the ground and covered?				

ADDITIONAL COMMENTS:

Appendix B

GHP Stormwater Conveyance System Inspection Checklist

GOOD HOUSEKEEPING PLAN (GHP)
STORMWATER CONVEYANCE SYSTEM INSPECTION CHECKLIST

Facility Name: _____ **Inspection Date:** _____

Inspector Name: _____ **Inspector Signature:** _____

- The intent of this inspection is to ensure the free flow of stormwater within on-site conveyance systems and prevent damage/flooding.
- **If maintenance is needed, please provide an explanation, and document all corrective actions performed.**
- **Inspections shall include visually accessible infrastructure only; at no time shall inspection personnel enter a confined space.**
- Retain the completed checklists for five (5) years.

Item	Item Checked (Y/N/NA)	Maintenance Needed (Y/N)	CORRECTIVE ACTIONS/COMMENTS *Items which cannot be corrected immediately must be reported to the GHP/NPDES Program Manager*
CATCH BASINS / INLETS			
1. Look for debris and sediment blocking catch basin grates. If found, remove.			
2. Look for damage or cracks to the frame, grate, basin walls or bottom. If found, schedule repairs or replacement.			
3. Look for sediment and debris in the catch basin sump. If sediment fills 60% of the sump or comes within 6” of a pipe it should be scheduled for cleaning.			
4. If any type of filtering device is present, verify that the filter is not clogged, torn, or damaged; clean if clogged, replace if damaged.			
PIPES / CULVERTS			
5. Look for evidence of clogged piping (e.g. visual obstructions, standing water within manholes/inlets structures, etc.). If found, remove or schedule cleaning.			
6. Verify vegetation growth, if present, does not impede water flow. If it does, mow, cut back, or remove.			

GOOD HOUSEKEEPING PLAN (GHP)

STORMWATER CONVEYANCE SYSTEM INSPECTION CHECKLIST

Item	Item Checked (Y/N/NA)	Maintenance Needed (Y/N)	CORRECTIVE ACTIONS/COMMENTS *Items which cannot be corrected immediately must be reported to the GHP/NPDES Program Manager*
7. Inspect for damaged piping, inlets, outlets, headwalls, wingwalls, or excessive erosion. If found, make or schedule repairs.			
DITCHES / TRAPEZOIDAL SWALES			
8. Check for erosion, slumping, or undercutting. If found, make or schedule repairs.			
9. Look for trash and sediment accumulation. Remove all trash and remove sediment if it will impede water flow or clog downstream structures.			
10. Verify vegetation growth does not impede water flow. If it does, mow, cut back, or remove. Remove any trees or shrubs growing within the ditch.			
11. Check the integrity of check dams, filter socks, or other flow dissipation/filtering devices within the ditch or swale. Perform or schedule service if they are clogged, damaged, or deteriorated.			
12. Check inlets and outlets for debris accumulation, damage, or erosion. If found, make or schedule repairs.			

ADDITIONAL COMMENTS:

GUIDANCE DOCUMENT
GOOD HOUSEKEEPING PLAN - STORMWATER CONVEYANCE INSPECTIONS

INTRODUCTION

Maintaining catch basins, stormwater inlets, and other stormwater conveyance structures on a regular basis will remove pollutants, prevent backups, and ensure the system functions as intended to avoid flooding.

Each GHP-covered facility is required to conduct routine stormwater conveyance system inspections to ensure the free flow of stormwater within the conveyance system(s). The GHP includes a *"GHP Stormwater Conveyance System Inspection Checklist"*, to be used when completing the required inspections. This document provides additional background and guidance to aid facility personnel in completing the inspections.

CATCH BASINS / INLETS

Catch basins and inlets are all points for stormwater to enter storm drain systems. These structures are typically part of a larger conveyance system with many interconnected components where the impairment of one component can compromise the functionality of the larger system. Inlets and catch basins are subject to functional impairment by a variety of conditions, including:

- Structural damage including from vehicles and plows
- Cracks/joint separation at piping (inlet and outlet) connections
- Leaking due to cracks and joint separation
- Missing or damaged grates and grate frames
- Corrosion
- Blockage caused by debris, sediment, vegetation, or other objects

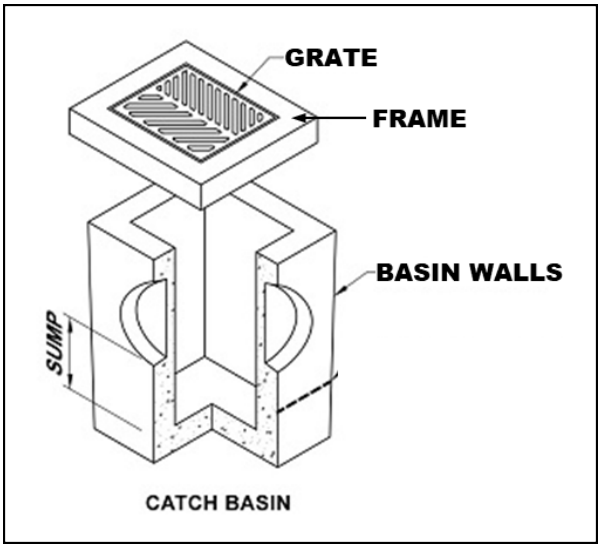

Figure 1 – Catch Basin Diagram

The following photos provide additional information related to the various inspection items, including examples of typical issues that may be encountered. The photo numbers correspond to the inspection checklist item number.

Inspection Item #1 [1]



Debris and sediment blocking inlet/catch basin grate.

Inspection Item #2 [2]



Damaged Grate

Inspection Item #2 [3]



Damaged Frame

Inspection Item #2 [4]



Failing brick walls with a stormwater inlet.

Inspection Item #2 [5]



Failing asphalt surrounding the inlet

[1] Grand Valley State University - https://www.gvsu.edu/groundswell/clogged-storm-drains-71.htm
[2] Georgia Department of Transportation – Stormwater System Inspection and Maintenance Manual, March 2020
[3] https://catchbasinauthority.ca/catch-basin-101/
[4] https://www.fixasphalt.com/catch-basin-repairs
[5] https://ccpia.org/catch-basin-and-manhole-inspections/

Inspection Item #3 [6]



Sediment and debris inside stormwater inlet

Inspection Item #3

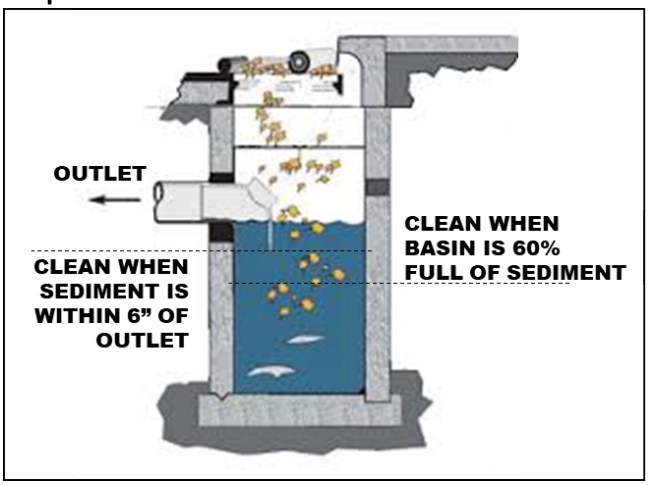

Remove sediment from a catch basin if it fills 60% of the sump or comes within 6" of a pipe.

Inspection Item #4 [7]



Example of inlet filter. Replace when filled or damaged. damaged.

Inspection Item #4 [8]



Example of an inlet filter sock, replace if

PIPES AND CULVERTS

Pipe systems are designed to convey stormwater runoff safely and effectively from inlets to various discharge points and outfalls. A culvert is a structure that channels water under an obstacle such as a roadway or railroad. These structures are subject to functional impairment by a variety of conditions, including:

- Blockage or obstruction due to build up of vegetation, debris, sediment, or other objects
- Cracks and/or joint separation
- Collapsed pipe
- Corrosion
- Root intrusion
- Lack of stabilization

[6] https://www.fixasphalt.com/catch-basin-repairs
[7] https://store.interstateproducts.com/products/Ultra-Drain-Guards/Ultra-Drain-Guard-Adjustable-Frame-Model
[8] https://www.newpig.com/pig-sediment-filter-sock/p/FLT787

Inspection Item #5 [9]



A pipe filled with sediment, inhibiting flow.

Inspection Item #5 [10]



Standing water around an inlet may indicate a blockage.

Inspection Item #6 [11]



Pipe conveyance filled with vegetation.

Inspection Item #7 [12]

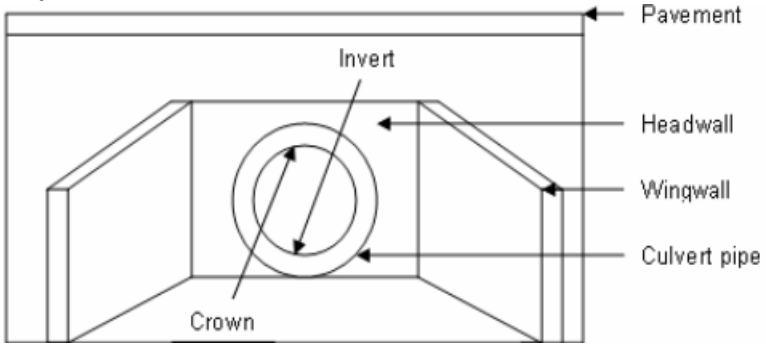

Diagram depicting various components of a culvert.

[9] Georgia Department of Transportation – Stormwater System Inspection and Maintenance Manual, March 2020
[10] https://www3.epa.gov/region9/water/npdes/stormwater-feature.html
[11] Georgia Department of Transportation – Stormwater System Inspection and Maintenance Manual, March 2020
[12] https://www.researchgate.net/figure/Components-of-a-Culvert_fig34_228685906

Inspection Item #7 [13]



A crack is the culvert headwall.

Inspection Item #7 [14]



Evidence of erosion around a culvert.

DITCHES AND SWALES

Ditches and swales serve similar functions. Both are used to convey stormwater. However, there are slight differences. A ditch is a narrow channel typically found along roads and at the edges of parking lots/driveways. A swale is like a ditch, but it is broad and shallow, and usually covered or lined with turfgrass or stone. Issues associated with these structures, which could impede their function include:

- Blockage or obstruction due to vegetation, debris, sediment, or other objects
- Erosion
- Rapidly moving water
- Lack of adequate vegetative cover for grass-lined channels

Inspection Item #8 [15]



Erosion and slumping within a drainage ditch.

Inspection Item #8 [16]



Slumping within a drainage swale.

[13] https://www.sbt-durabi.org/articles/xml/ARN0/
[14] https://lufkindailynews.com/news/local/culverts-crumbling-in-precinct-1/article_a9fed902-4379-5248-ab11-7471e2974298.html
[15] https://graniteseed.com/blog/how-to-stop-a-ditch-from-eroding/
[16] https://www.mnwcd.org/erosion-control

Inspection Item #9 [17]



Litter and debris within a ditch.

Inspection Item #9 [18]



Litter and debris within a swale.

Inspection Item #10 [19]



Cracks and joint separation in concrete channels, removal of vegetation may prevent future damage.

Inspection Item #11 [20]



Rock check dam across a channel.

Inspection Item #11 [21]



Filter sock check dams across a grass swale.

[17] https://craven.ces.ncsu.edu/2023/02/for-those-who-love-to-litter/
[18] https://www.cityoftulsa.org/government/departments/public-works/stormwater-quality/adopt-a-stream/
[19] Georgia Department of Transportation – Stormwater System Inspection and Maintenance Manual, March 2020
[20] EPA Stormwater Best Management Practice, Check Dams, December 2021
[21] EPA Stormwater Best Management Practice, Check Dams, December 2021

Inspection Item #12 [22]



Inlet to a rock-lined swale.

Inspection Item #12 [23]



Sediment accumulation at swale inlet.

END OF DOCUMENT

[22] https://www.stormwater.com/erosion-control/vegetation-management/article/13016118/inlet-protection-during-constructionand-after

[23] https://www.stormwater.com/erosion-control/vegetation-management/article/13016118/inlet-protection-during-constructionand-after

Appendix C

General Spill Response Procedures

SPILL RESPONSE AND NOTIFICATION PROCEDURES

A. Discovery of a Spill

1. Upon discovery of a spill, facility personnel should immediately assess the situation and determine if the spill is considered a "Minor" or "Major" spill. For a spill to be considered "Minor" all the following conditions must be satisfied:

    - ❖ The type of material spilled is known;
    - ❖ The spill is confined to the immediate work area;
    - ❖ The spill has not reached storm drains, sanitary sewer systems, open water, or surrounding soils;
    - ❖ The spill can be safely managed;
    - ❖ The employee can contain and clean up the spill with the PPE that is normally used in the work area;
    - ❖ The spill does not pose a serious threat of fire or an explosion; and
    - ❖ The spill does not pose conditions that are immediately dangerous to life or health.

2. If all the above conditions are met, the spill is considered "Minor". Refer to ***Section B*** of this document for appropriate response actions.

3. If all the above conditions are not met, then the spill is considered "Major". Refer to ***Section C*** of this document for appropriate response actions.

4. If a spill involves flammable liquids, ignitable vapors may be present - precautions must be taken to prevent ignition. Do not turn on or off equipment since sparks may be generated. Additionally, avoid the movement of equipment that could create static electricity. Larger spills of flammable liquids could pose a fire threat and would be considered a "Major" spill. Refer to ***Section C*** for appropriate actions.

B. Response to a "Minor" Spill

1. Identify the source of the spill and the direction in which the spill is heading.

2. Attempt to stop the spill at the source. Where applicable, the source of the spill shall be taken out of service until repairs can be made. If the spill is related to a fuel dispensing system, activate the Emergency Shut-Off (ESO) switch to prevent additional fuel disbursements.

3. If material is released outside a containment area, it is crucial that the material be contained as quickly as possible. Following proper safety procedures, use absorbent materials or diking to contain the spill. Prevent the spill from reaching storm drains, sanitary sewers, or open water. If a spill is flowing toward a drain, install temporary diking around the drain, block off the drain with a drain cover, or place absorbent material around the drain to prevent a discharge.

4. Once the spill has been stopped and contained, estimate the quantity of the spill. Consult applicable Safety Data Sheet (SDS) for material compatibility and environmental precautions. Note and follow recommendations regarding special precautions, spill response equipment, methods, or precautions. All cleanup work shall be conducted in accordance with existing safety protocols and SDS recommendations. Contact the facility Superintendent/Supervisor, or designee, for assistance if needed.

5. Recover or clean up the spilled material as much as possible. Material that cannot be reused must be discarded in accordance with state and federal regulations. Liquids absorbed by porous materials (e.g., wood, gravel, significant quantities of absorbent material, etc.) shall be placed into US DOT-approved 30-gallon or 55-gallon steel drums. Following cleanup, the container shall be secured and appropriately labeled to identify the contents and the date of the spill/cleanup. Containers shall be stored indoors and provided with secondary containment until transported off-site for disposal.

6. For spills that do not involve flammable liquids or other potential hazardous wastes, small quantities of used absorbent materials may be double bagged and disposed of along with municipal trash as long as all liquids have been absorbed (no free liquid may be present).

7. If the spilled material is a flammable liquid, corrosive liquid (pH ≤ 2 or ≥ 12.5), or other potential hazardous waste, all recovered product, impacted material, and used absorbent must be placed into a US DOT-approved containers/drums. Following cleanup, the container(s) shall be secured and appropriately labeled to identify the contents and the date of the spill/cleanup. Containers shall be stored indoors and provided with secondary containment until transported off-site for disposal. The facility Superintendent/ Supervisor, or designee shall be notified that a potential hazardous waste was released and that a waste characterization may be needed to facilitate proper disposal.

8. Surfaces that are contaminated by the spill shall be cleaned utilizing dry absorbent material. Tools and equipment that have been used in the cleanup must be decontaminated immediately after use. Decontamination water (if used) must be minimized, containerized, and disposed of properly.

9. If waste requires disposal, notify the facility Superintendent/Supervisor, or designee who will arrange for the proper characterization and disposal of any waste material. Representative sampling and analysis may be necessary to properly characterize the waste. The waste must be transported and disposed of in compliance with all applicable laws and regulations. Waste manifests, trip tickets, or bills of lading (if required) for waste disposal shall be kept on file.

10. Facility personnel shall restock/replace spill response equipment and absorbent materials used during the clean-up efforts.

11. The facility Superintendent/Supervisor, designee, or other appropriate County personnel shall be notified of the spill in accordance with ***Section D*** of this document.

C. Response to "Major" Spill

A "Major" spill is any discharge that does not meet the definition of a "Minor" spill. Any employee or contractor observing, being involved with, or recognizing a potential or actual spill of oil or other hazardous material, other than a "Minor" spill is responsible for performing the following actions:

1. If there is no danger to human health, attempt to stop and contain the spill at the source. If the spilled material is unknown, if PPE other than that which is typically used in your work area, is necessary to approach the spill area, or if assistance is required to stop the spill, do not attempt to contain the spill. If the spill is related to a fuel dispensing system, activate the Emergency Shut-Off (ESO) switch.

2. Most County employees lack the appropriate training to respond to "Major" spills. If the spill is of an unknown substance, is of a quantity that cannot be safely managed, or poses other risks beyond the training level of the employee, the employee should not attempt to contain or clean up the spill.

3. Evacuate individuals from the area and keep personnel away from the impacted area.

4. Immediately notify the facility Superintendent/Supervisor, or designee of the incident. The notified individual will determine the need for further evacuations and contact emergency response personnel (911), as necessary. *If a situation represents an immediate and grave danger to personnel, the public, structures, or other infrastructure, the individual discovering the incident may call 911 directly without first notifying facility management.*

5. The facility Superintendent/Supervisor or designee will determine if assistance from emergency response contractors is required to clean up the incident and will coordinate such spill response efforts with spill response contractors and other County agencies and first responders.

6. Facility personnel will provide assistance to emergency responders, as appropriate.

D. Reporting a Spill (Internal Notifications)

1. Once a spill is contained and cleanup operations have been initiated, the individual discovering the spill shall notify the appropriate County representatives and provide the following information:

    a) Identify the location, date, and time of the incident;
    b) Identify the type of material spilled or discharged;
    c) Estimate the quantity spilled and the rate of the spill;
    d) Identify the cause of the spill or discharge;
    e) Identify impacted media or infrastructure (soil, storm drains, open water bodies, etc.);
    f) Determine the extent of injuries involved; and
    g) Provide response measures implemented by the facility personnel.

E. Reporting a Spill (Regulatory Notifications)

State of Maryland Reporting Requirements (COMAR 26.10.01.05)

1. Upon discovery of a spill, the Responsible Person shall notify the MDE Emergency Response Division **within two (2) hours** by calling 866-633-4686. The caller shall be prepared to provide the following information:

    a) The time and date of the spill;
    b) The location and cause of the spill;
    c) The mode of transportation or type of facility involved;
    d) Type and quantity of oil spilled;
    e) Details regarding any assistance required;
    f) The name, address, and telephone number of the person making the report; and
    g) Any other pertinent information requested by the Department.

2. MDE will provide further guidance on additional responsibilities.

3. Within **ten (10) working days** of the completed removal and clean-up activities, the Responsible Person shall prepare a report using either County letterhead detailing the incident. The report shall contain the following:

    a) Date, time, and place of the spill;
    b) The amount and type of oil or hazardous substance spilled;
    c) A complete description of circumstances that contributed to the spill;
    d) A complete description of the containment and removal operations performed, including disposal sites to which oil refuse was transported;
    e) Procedures, methods, and precautions instituted to prevent the recurrence of an oil spill from the facility involved;
    f) Any other information considered necessary or required by the MDE for a complete description of the incident; and
    g) A certification that the information provided is true and correct to the knowledge of the person signing the report.

4. The completed report shall be submitted to mdeerd.mema@maryland.gov or faxed to 410-537-3932.

5. A digital copy of the completed report and any accompanying documentation shall be retained

Federal Reporting Requirements - National Response Center (40 CFR 110)

1. If any of the following criteria are met the Responsible Person shall notify the National Response Center (NRC) **within two (2) hours** of the spill discovery by calling 800-424-8802 or 202-426-2675.

    - ❖ The spill has caused a film, sheen, or discoloration of the surface water or shorelines;
    - ❖ The material spilled will violate applicable water quality standards (surface water or groundwater); or
    - ❖ The spill has caused a sludge or emulsion to be deposited beneath the surface of the water or on the shoreline.

2. At a minimum, the following information shall be provided to the NRC:

    a) Name, organization, and telephone number of reporting party;
    b) Name and address of the responsible party;
    c) Date, time, and location of the incident;
    d) Source and cause of the discharge;
    e) Type of material(s) discharged;
    f) Quantity of materials discharged;
    g) Danger or threat posed by discharge;
    h) Number and types of injuries (if any);
    i) Weather conditions at the incident location; and
    j) Other information to help emergency personnel respond to the incident.

3. If unable to report to the NRC, reports can be made to the EPA Regional Office at 800-438-2474 or the U.S. Coast Guard (USCG) at 202-372-1001. The NRC, EPA, or USCG will provide further guidance.

4. A digital record of the NRC notification and any accompanying documentation shall be retained on-site.

Federal Reporting Requirements - EPA Regional Administrator (40 CFR 112.4)

1. If the facility where the spill occurred is regulated under 40 CFR 112 and is required to have a Spill Prevention, Control, and Countermeasures (SPCC) Plan, the Responsible Person shall report the spill to the EPA Region III Administrator when any of the following criteria are met:

   - ❖ More than 1,000 gallons of oil is discharged to navigable waters or adjoining shorelines in a single incident; or
   - ❖ More than 42 gallons of oil is discharged to navigable waters or adjoining shorelines in each of two incidents occurring within any twelve-month period.

2. The report shall be made in writing **within 60 days** of the spill and shall contain:

   a) Name and location of the facility;
   b) Owner/operator name;
   c) Maximum storage/handling capacity of the facility and normal daily throughput;
   d) Corrective actions and countermeasures taken;
   e) Adequate description of the facility including maps, and flow diagrams;
   f) Cause of the discharge to navigable waters, including a failure analysis;
   g) Additional preventative measures taken or planned to minimize discharge reoccurrence; and
   h) Other information required by the EPA Regional III Administrator.

3. The report shall be submitted to the EPA Regional Administrator at the following address:

   EPA Regional Administrator
   US EPA Region 3
   1650 Arch Street (3RA00)
   Philadelphia, PA 19103-2029

4. A copy of the report shall be retained in the facility SPCC Plan.

Appendix D

Training Records

GOOD HOUSEKEEPING PLAN (GHP)
TRAINING ATTENDANCE LOG

FACILITY NAME: _____

DATE	NAME *(PRINT)*	SIGNATURE

By signing I affirm that I have completed the required annual training; and I am aware of and understand my responsibilities under this Plan.

GOOD HOUSEKEEPING PLAN (GHP)

Cedar Lane Park
1100 Cedar Lane
Bel Air, MD 21015

June 30, 2025

TABLE OF CONTENTS

1.0 BACKGROUND & INTRODUCTION 1
1.1 Objectives 1
1.2 Potential Stormwater Pollutants 1
2.0 RESPONSIBILITIES 3
2.1 GHP Implementation 3
2.2 Plan Review and Modification 3
2.3 Inspections 3
2.3.1 GHP Site Inspections 3
2.3.2 Conveyance System Inspections 4
2.4 Training 4
3.0 BEST MANAGEMENT PRACTICES (BMPs) 5
3.1 Applicability of BMP Fact Sheets 5
3.2 BMP Fact Sheets 5

List of Tables

TABLE 1-1 POTENTIAL STORMWATER POLLUTANTS AND THEIR SOURCES 2

List of BMP Fact Sheets

GH-01 - Waste Management
GH-02 - Vehicle and Equipment Storage
GH-03 - Vehicle/Equipment Refueling
GH-04 - Vehicle Maintenance
GH-05 - Vehicle/Equipment Washing
GH-06 - Material Storage
GH-07 - Aboveground Storage Tanks
GH-08 - Resident Drop-Off Centers
GH-09 - Stockpiles
GH-10 - Deicing Materials

Appendices

Appendix A: GHP Site Inspection Checklist
Appendix B: GHP Stormwater Conveyance Inspection Checklist
Appendix C: General Spill Response Procedures
Appendix D: Training Records

List of Acronyms

AST	-	Aboveground Storage Tank
BMP	-	Best Management Practice
CFR	-	Code of Federal Regulations
GHP	-	Good Housekeeping Plan
MDE	-	Maryland Department of the Environment
MS4	-	Municipal Separate Storm Sewer System
NPDES	-	National Pollutant Discharge Elimination System
SPCC	-	Spill Prevention, Control, and Countermeasure Plan

1.0 BACKGROUND & INTRODUCTION

Polluted stormwater runoff has the potential to enter the County's storm sewer systems (referred to as a municipal separate storm sewer system or MS4), and then discharge, untreated, into local water bodies. To address this potential stormwater pollution, the County is required to obtain a NPDES permit from the Maryland Department of the Environment (MDE). The NPDES Permit requires the County to take actions to prevent stormwater pollution, maintain storm sewer systems, monitor stormwater discharges, and develop and implement comprehensive management programs to minimize the discharge of pollutants from the storm sewer system.

To comply with Part IV.D.4.b of the County's Phase I MS4 Permit, the County must develop, implement, and maintain a Good Housekeeping Plan (GHP) for certain County-owned properties not required to be covered under Maryland's General Permit for Discharges from Stormwater Associated with Industrial Activities *(General Permit 12-SWA / 20-SW).*

To support this effort, a *"Good Housekeeping Plan Applicability Certification"* has been developed to evaluate and document if a specific County-owned facility is subject to the GHP requirements. The *"GHP Applicability Certification"* includes the following ten (10) potential stormwater polluting activities. If any of the covered activities are performed at the facility, then that facility is required to implement a site-specific GHP. The GHP will include each of the potential stormwater polluting activities identified in the *"GHP Applicability Certification"* and corresponding pollution prevention procedures.

- Waste Management
- Vehicle and Equipment Storage
- Vehicle/Equipment Refueling
- Vehicle Maintenance
- Vehicle/Equipment Washing
- Material Storage
- Aboveground Storage Tanks
- Resident Drop-Off Center
- Stockpiles
- Deicing Materials

1.1 Objectives

The GHP was developed to outline suitable practices, procedures, and protocols, or Best Management Practices ("BMPs") for reducing and/or preventing stormwater pollution associated with operations at covered County-owned properties. The intent of the pollution prevention procedures included in the GHP is to limit the release of materials with the potential to impact stormwater, this includes reducing or eliminating (to the extent practical):

- The occurrence of spills and leaks;
- The accidental dumping or release of materials;
- The accumulation of waste, trash, debris, unused parts/equipment, etc.;
- The exposure of hazardous materials to precipitation/run-off;
- Stormwater run-off contamination by improperly stored materials; and/or
- Illicit discharges to the storm drain system.

1.2 Potential Stormwater Pollutants

Table 1-1 on the following page provides a list of common potential pollutants that may result from the GHP-regulated activities identified above. Understanding the sources of these pollutants can help in achieving the goals and objectives of the GHP program.

TABLE 1-1 POTENTIAL STORMWATER POLLUTANTS AND THEIR SOURCES

		Waste Management	Vehicle/Equipment Storage	Vehicle/Equipment Refueling	Vehicle Maintenance	Vehicle/Equipment Washing	Material Storage	Aboveground Storage Tanks	Resident Drop-Off Center	Stockpiles	Deicing Materials
Pollutants	**Sources**	**Associated GHP Activity**									
Sediment	Land disturbance; erosion; paved surfaces; material stockpiles; waste storage; salt/abrasive application	X				X	X		X	X	X
Hydrocarbons *(petroleum compounds)*	Leaking vehicle and equipment; vehicle and equipment cleaning; spills; improper storage; maintenance activities; scrap metal disposal; improper disposal	X	X	X	X	X	X	X	X		
Metals	Vehicle brake and tire wear; vehicle/equipment exhaust; batteries; galvanized metal; paint and wood preservatives; fuels, pesticides, and cleaners; vehicle fueling, maintenance, and washing; industrial waste	X	X	X	X	X	X	X	X		
Toxic Chemicals	Pesticide application; improper chemical storage; leaks and spills from storage containers; leaking vehicles; maintenance activities	X	X		X	X	X	X	X		
Chlorides	De-Icing chemicals										X
Trash/Debris	Improper waste storage and disposal; leaking trash containers; littering; poor housekeeping	X	X				X		X		
Nutrients (nitrogen and Phosphorus)	Fertilizers; malfunctioning septic systems; sewer overflows; animal/pet waste; vehicle washing; decaying grass and leaves; leaking trash containers; atmospheric deposition	X				X	X		X		

2.0 RESPONSIBILITIES

2.1 GHP Implementation

A separate GHP is required for each covered facility. The following individual *(identified by name and/or title)* is accountable for the administration and implementation of the GHP at this facility and has the authority to commit the necessary resources to implement this Plan.

_____

Name and/or Title of Responsible Person

The Responsible Person listed above shall ensure that facility personnel involved in any GHP-covered activities identified in this Plan, are provided with access to, and are familiar with, the contents of this Plan.

2.2 Plan Review and Modification

The *"GHP Applicability Certification"* completed for this facility must be reviewed and updated once every permit term, or within one (1) year of substantial changes to a facility's operations that could reasonably contribute to stormwater pollution. Any newly constructed/acquired facility must be assessed within one (1) year of initiating operations at the facility. The facility's GHP must be amended and reissued to the facility within one (1) year of any changes to the facility's *"GHP Applicability Certification"*.

When warranted, the BMP Fact Sheets provided in Section 3.0 may need to be updated or revised. At the same time, additional BMP Facts Sheets may be added. The need for such updates or modifications will be at the discretion of the County's GHP Program Administrator.

2.3 Inspections

The County's MS4 permit requires each facility covered by a GHP to have the following:

1. Written procedures for annually assessing County properties to prevent the discharge of pollutants, spills, and leaks into the County's storm sewer system; and

2. Written procedure for performing stormwater conveyance system inspections and for removing debris that may cause clogging, backups, and flooding.

To meet these requirements, each facility that is covered by a GHP will be required to complete routine site inspections and stormwater conveyance system inspections as detailed below. Facility management will be responsible for ensuring the necessary inspections are completed within the required timeframes, that corrective actions (if needed) are performed, and that records of inspections and completed corrective actions are maintained for at least five (5) years.

2.3.1 GHP Site Inspections

The GHP Site Inspection will be performed to ensure that each GHP-covered facility is being properly maintained and that there are no visible signs of pollutants entering the stormwater system. GHP facilities shall utilize the *"GHP Site Inspection Checklist"*, provided in ***Appendix A*** to complete the required inspection. At a minimum, each facility is to be inspected every five (5) years.

2.3.2 Conveyance System Inspections

Stormwater conveyance systems are generally comprised of curbs and gutters, catch basins, inlet structures, swales, channels, piping, culverts, detention ponds, outfalls, or other structures that are used to collect, contain, and convey stormwater runoff.

The unimpeded movement of stormwater through conveyance systems is critical in avoiding backups and flooding, which can impede facility operations and damage property. Routine inspections and preventative care of stormwater conveyance systems can ensure these systems function as intended and prevent the need for costly and time-consuming repairs and retrofits.

Each GHP-covered facility is required to conduct routine stormwater conveyance system inspections to ensure the free flow of stormwater within the conveyance systems. GHP-covered facilities shall utilize the *"GHP Stormwater Conveyance System Inspection Checklist"*, provided in ***Appendix B*** to complete the required inspections. At a minimum, facility conveyance system inspections are to be conducted every five (5) years.

2.4 Training

As part of the GHP requirements within the County's Phase I NPDES permit, annual training must be provided to all appropriate staff and contractors. Such training shall be provided to any individuals responsible for implementing the GHP, performing the required inspections, or involved in any of the GHP-covered activities identified in this Plan. The required training shall focus on the duties and responsibilities assigned to site personnel in implementing the GHP and the best management practices (BMPs) prescribed in this Plan for preventing, reducing, and eliminating the discharge of pollutants during facility activities.

The County's MS4/GHP Program Coordinator will be responsible for developing the required training and disseminating it to GHP-covered facilities. Each GHP-covered facility will be responsible for identifying staff/contractors who must attend annual training, ensuring identified staff complete the required training, and maintaining records that document training dates and attendees. Training records and other documentation shall be maintained in ***Appendix D*** of this Plan.

3.0 BEST MANAGEMENT PRACTICES (BMPs)

This section contains a BMP Fact Sheet for each of the ten (10) GHP-regulated activities. The County's operations are not limited to the BMPs contained within this document; nor is the County required to implement all of the pollution prevention measures identified within each BMP Fact Sheet. The County should select and implement those measures that are applicable and have the greatest potential for reducing stormwater pollution.

The BMP Fact Sheets contained within this document offer recommended protocols for a particular activity. These pollution prevention measures are considered non-structural BMPs with a focus on source control of potential pollutants.

3.1 Applicability of BMP Fact Sheets

The *"GHP Applicability Certification"* completed for this facility has identified the activities conducted at this facility that require coverage under this Plan. Each of the BMP Fact Sheets shall be marked as to whether they are applicable or not applicable to this facility. The Applicable/Not Applicable indicator on each BMP Fact Sheet can be revised in response to changes in operations at the facility.

3.2 BMP Fact Sheets

BMP Fact Sheets can be found on the following pages. For the sake of consistency, the general outline of a BMP Fact Sheet will be as follows:

- Identification of GHP-covered activity.
- Applicability of the BMP Fact Sheet to the facility.
- A general description of the concern the activity poses to stormwater.
- Recommended pollution prevention measures for reducing/eliminating stormwater pollution.
- Additional sources of information, if applicable.

WASTE MANAGEMENT

Not Applicable ☐ Applicable ☒

CONCERN

Improperly managed waste can allow trash and debris to be washed into storm drains which poses a concern to water quality, marine life, and public health. It also has the potential to create obstructions in the drainage system, which can lead to backups and flooding. Additionally, improper storage and handling of waste materials can allow pollutants including oils and greases, toxic and chemical compounds (including nutrients), bacteria, metals, and other potentially hazardous wastes to enter waterways.

POLLUTION PREVENTION MEASURES

General *(applicable to all waste management activities)*

1) Provide suitable containers, preferably with working covers, to collect waste materials.
2) Ensure that appropriate waste containers are available in areas where waste is generated.
3) Provide a cover over waste storage areas, if feasible.
4) Avoid positioning waste receptacles near storm drains, water bodies, or areas of concentrated runoff.
5) Ensure that lids to waste containers *(if present)* are kept closed to prevent the intrusion of precipitation and prevent trash from blowing out of the receptacle.
6) For waste receptacles, which do not have lids and could leak, containers should be inspected regularly and controls (e.g., containment, spill response, etc.) shall be enacted whenever leaks or dry-weather discharges are observed.
7) Routinely inspect waste containers, roll-offs, compactors, and other waste receptacles for the presence of excessive waste accumulation and overflowing containers.
8) Ensure that wastes accumulating on the ground are placed in a suitable waste container.
9) Ensure that wastes are removed from the facility regularly by a licensed and contracted vendor.
10) Repair or replace damaged waste container lids.

Trash Compactors

1) Routinely inspect trash compactors for malfunctioning equipment or leaking hydraulic oil and provide the appropriate spill response if leaking equipment is encountered.
2) Regularly inspect compactors for leaking fluids and implement appropriate controls such as spill response/cleanup, collection or diversion of released fluids, providing secondary containment, etc. whenever leaks or dry-weather discharges are observed.

Scrap Metal Collection Containers

1) Avoid placing oily or grease-covered items in uncovered scrap metal recycling collection containers. If needed, wrap oily/greasy items in plastic garbage bags before placing them in the collection container.

Hazardous/Universal Wastes

1) Ensure that hazardous waste and universal wastes (e.g., batteries, bulbs, etc.) are collected and stored indoors or within covered collection containers.
2) Verify that hazardous/universal waste collection containers are in good condition, not leaking, and compatible with the wastes being stored.

Street Sweeping / Vactor Truck Material Storage

1) Do not site storage areas near storm drains, open water bodies, or areas of concentrated runoff.
2) Install sediment control devices (e.g. silt fence, silt socks, hay bales, etc.) around the staging area. Inspect these controls regularly and replace them as needed.
3) Cover the materials staging area, if feasible.
4) Provide oil-absorbent booms if necessary to control oily discharge. Inspect and replace booms regularly.
5) The staging area should be checked periodically for evidence of sediment migrating outside of the staging area. Material that has migrated out of the staging area should be promptly swept and returned to the staging area or disposed of.

Waste Cooking Oil/Grease

1) Maintain storage containers indoors or within a covered location, if feasible.
2) Storage containers shall be secured to prevent infiltration of precipitation and accidental/intentional spills or releases.
3) Carefully transfer waste oil/grease to the appropriate collection container to avoid spills.
4) Maintain suitable spill response equipment near collection containers. Immediately clean up any spilled oil/grease. Keep the exterior of the collection container clean and free of spilled oil/grease.
5) Provide secondary containment for collection containers, if feasible.

VEHICLE AND EQUIPMENT STORAGE

Not Applicable ☒ Applicable ☐

CONCERN

Vehicles and equipment may be stored onsite to support various County operations (e.g., construction, maintenance, snow removal, roadside assistance, mass transit, mowing, etc.). Examples of County owned and operated vehicles and equipment stored onsite at any given time include but are not limited to, the following: cars, trucks, buses, emergency response vehicles, garbage trucks, heavy equipment (backhoes, frontend loaders, etc.), forklifts, towable generators, portable light stands, and roadside equipment. Vehicle and equipment storage is considered a pollutant source due to the potential for incidental releases of petroleum products, lubricants, and various automotive fluids.

POLLUTION PREVENTION MEASURES

1) When possible/practical, store vehicles and equipment inside or under cover to prevent exposure to precipitation.
2) If vehicles or equipment must be stored outside, store vehicles/equipment in designated areas away from areas of concentrated runoff, storm drains, and other stormwater conveyances.
3) Vehicles and equipment shall be staged on impervious (asphalt or concrete) surfaces;
4) Keep truck beds clean and ensure potential stormwater pollutants are stored in closed containers, covered, or otherwise protected from stormwater exposure.
5) Conduct routine visual inspections of vehicles and equipment for the presence of leaks and respond accordingly.
6) Leaking vehicles/equipment should be moved inside or under cover. At a minimum, drip pans or absorbent pads shall be used to contain the leak until the vehicle/equipment can be relocated and the leak addressed.
7) Drain all fluids from wrecked or heavily damaged vehicles and equipment before storage.
8) Have an adequate supply of appropriate spill response equipment readily available and clean up all spills and leaks immediately utilizing dry cleaning techniques (e.g. absorbents and brooms).
9) Train staff in spill response so that incidents are addressed in a timely fashion.
10) Do not wash down areas where leaks have collected on ground surfaces; use dry cleaning methods such as granular absorbents and brooms.

VEHICLE AND EQUIPMENT REFUELING

Not Applicable ☒ Applicable ☐

CONCERN

Refueling activities associated with County vehicles and equipment can result in a discharge of fuel (gasoline and diesel fuel), which has the potential to enter the storm drain system and/or a nearby waterway. Such releases can introduce hydrocarbons, metals, and other toxic chemicals to stormwater runoff.

POLLUTION PREVENTION MEASURES

General Procedures *(applicable to all refueling activities)*

1) Routinely *(at least daily)* inspect the fuel dispensing area for any spills or leaks.
2) Routinely inspect fuel dispensing equipment looking for leaking or damaged equipment. Damaged or malfunctioning equipment shall be taken out of service until it has been repaired.
3) Fuels will only be dispensed into authorized vehicles, equipment, and approved containers.
4) Vehicle operators must remain outside of their vehicles and in attendance of fuel dispensers at all times while dispensing fuel.
5) Third-party contractors must be trained in proper refueling procedures and pollution prevention.
6) Do not utilize a foreign object to keep the dispenser nozzle in the open position. If present, a “hold-open” latch on the nozzle may be used.
7) Do not “top off” a vehicle’s fuel tank once the dispenser nozzle’s automatic shut-off has been activated. Topping off tanks may result in spills. Post signs in fueling areas warning vehicle operators against "topping off" of vehicle fuel tanks.
8) After refueling has stopped, allow several seconds to pass before removing the nozzle and returning it to the dispenser. This will prevent incidental dripping from the nozzle.
9) Employees refueling vehicles shall note the location of the “Emergency Fuel Shut Off” switch, to be used to stop the flow of fuel to the dispensers in the event of a release or emergency.
10) Have an adequate supply of appropriate spill response equipment readily available and clean up all spills immediately utilizing dry cleaning techniques (e.g. absorbents and brooms).
11) Immediately clean up and dispose of used absorbent material.
12) Do not wash down fueling areas; use dry cleaning methods such as granular absorbents and brooms.
13) Conduct refueling activities over impervious (e.g. concrete) surfaces. Place drip pans or absorbent pads under the nozzle if fueling occurs over a permeable surface such as grass or soil.
14) Install oil control devices in storm drains that may receive contaminated runoff from fueling areas.
15) Cover fueling areas with a canopy or roof to prevent direct contact with rainfall. Direct run-on away from fueling areas and collect fueling area run-off in a dead-end sump or oil-water separator.

Mobile Equipment Refueling

1) Refuel equipment on an impervious surface, downgradient of, and at the farthest practical distance from any storm drain, stormwater conveyance, stormwater management feature, or waterway.
2) Utilize secondary containment when refueling equipment (when practical).
3) Ensure mobile refuelers are parked in designated locations and away from areas of concentrated run-off, storm drains, and other stormwater conveyances.
4) Ensure that procedures are in place and that staff is properly trained in spill response/cleanup so that leaks and spills are addressed appropriately and promptly.

VEHICLE MAINTENANCE

GH-04

Not Applicable ☒ Applicable ☐

CONCERN

Vehicle and equipment maintenance can impact the water quality of nearby waterways by exposing stormwater to various pollutants including petroleum hydrocarbons, solvents, antifreeze/coolants, used oil, lubricating oil, grease, brake fluid, metals, and various chemicals. Additionally, vehicles that are wrecked or awaiting repair can be a source of pollution if leaking fluids are not properly controlled.

POLLUTION PREVENTION MEASURES

1) Conduct vehicle and equipment maintenance activities indoors.
2) Make sure incoming vehicles and equipment are inspected for leaking fluids and oil.
3) Move leaking vehicles or equipment indoors or under cover as soon as possible. At a minimum, a drip pan or absorbent pads shall be utilized to contain the leak until the vehicle/equipment can be relocated and the leak addressed.
4) Avoid performing maintenance on vehicles in close proximity to exterior doorways, which may allow released fluids to migrate outdoors.
5) Have an adequate supply of appropriate spill response equipment readily available and clean up all spills and leaks immediately utilizing dry cleaning techniques (e.g. absorbents and brooms).
6) Keep maintenance areas neat and well organized. Remove dirt, debris, and used absorbent regularly.
7) Inspect maintenance areas as well as maintenance equipment on a routine basis.
8) Store vehicles, parts, and generated wastes indoors or off the ground and under cover whenever possible. When practical, provide secondary containment.
9) Promptly transfer used fluids to the proper waste container; do not leave full drip pans or other open containers around the shop. Empty and clean drip pans and containers regularly.
10) Waste liquids shall not be poured into floor drains, sinks, outdoor storm drain inlets, or other storm drains or sewer connections. Liquid wastes are to be collected in properly labeled containers and disposed of by a licensed waste hauler or other appropriate method.
11) Store leaking batteries in a sealed container and provide secondary containment, if feasible.
12) Clean all parts indoors utilizing a self-contained parts washer.
13) Do not hose down indoor service areas to storm drains or areas where it can seep into groundwater.
14) Maintain floor drains in good working order and inspect for proper function on a routine basis. Consider plugging floor drains that discharge to the storm sewer.
15) Ensure oil/water separators (if present) are maintained in proper working order and are checked on a routine basis for the presence of oil.
16) If maintenance work must be performed outdoors, adhere to the following requirements:
    - Conduct maintenance activities over an impervious surface, away from stormwater inlets.
    - Cover outdoor maintenance areas and direct stormwater run-on away from the area.
    - Use drip pans or drop cloths underneath the equipment to catch leaks and drips.
    - Have an adequate supply of appropriate spill response equipment readily available.
    - Clean all spills immediately using dry cleaning techniques (e.g. absorbents and brooms).
    - Avoid performing maintenance activities during precipitation events.
    - Limit temporary outdoor maintenance activities to a single shift/day if additional time is needed to cover the work area at the end of each day/shift.

BMP Fact Sheet

VEHICLE AND EQUIPMENT WASHING

GH-05

Not Applicable ☒ Applicable ☐

CONCERN

Vehicle and equipment washing can generate washwater that contains oil, grease, organic compounds, surfactants, phosphates, metals, and suspended solids. If vehicles/equipment are washed outdoors on impervious surfaces, dirty washwater can contaminate stormwater that ends up in waterways. Washing equipment over pervious surfaces can allow washwater to seep into the ground contaminating groundwater.

POLLUTION PREVENTION MEASURES

1) Vehicle and equipment washing should only be conducted in designated indoor wash bays that capture and recycle washwater to the extent practical.
2) Wastewater from the washing facility should be discharged to the sanitary sewer system under the authorization of a wastewater discharge permit issued by the local municipal authority.
3) The floor of indoor vehicle wash bays should be completely bermed or sloped to collect wash water and prevent migration outdoors.
4) No other activities (e.g., fluid changes, repairs, material storage) shall be performed in wash areas.
5) Keep the wash bay neat and well organized. Sweep or pick up all trash and debris daily or as needed.
6) Solid materials accumulated on vehicles or in vehicle beds (e.g. salt, soil, grass, etc.) shall be knocked off or otherwise removed from the vehicle (while inside the wash bay) prior to washing. Solid materials shall be collected and disposed of properly.
7) For vehicles too large to completely fit in the wash bays, only the portion of the vehicle physically located in the confines of the wash bay shall be cleaned. The vehicle shall then be rotated to allow for the remaining portion of the vehicle to be washed.
8) Use nozzles that automatically turn off water when not in use and consider high-pressure, low-volume sprays.
9) Avoid detergents as much as possible. If detergents are necessary, use a biodegradable, phosphate-free detergent.
10) If discharging to an oil-water separator, use a non-emulsifying detergent.
11) Inspect floor drain systems, holding tanks, and conveyances associated with designated wash areas regularly. Maintain oil/water separators and/or process flowthrough separators on a routine basis.
12) Use commercial car washes when vehicle or equipment washing cannot be performed onsite without causing impacts to stormwater.
13) If washing must occur onsite and outdoors, use a designated impervious area that is marked with posted signs indicating proper washing procedures. This area must be bermed to contain the wash water and graded to direct the wash water to the sanitary sewer, an oil-water separator, a holding tank, a dead-end sump, or other containment area. Captured water shall be disposed of properly.
14) Avoid steam cleaning and engine/undercarriage washing which can produce high pollutant concentrations. If steam cleaning or engine washing is necessary, perform such cleanings within isolated indoor areas, and ensure wash water is treated and discharged to the sanitary sewer (if permitted to do so) or captured for off-site disposal.
15) Train staff in proper washing techniques and how to confine washing to designated wash areas.
16) Consider alternatives to washing such as using air to blow grass and debris from small equipment, wet-wiping equipment with rags, etc.

BMP Fact Sheet

MATERIAL STORAGE

GH-06

Not Applicable ☒ Applicable ☐

CONCERN

The storage of petroleum products, chemicals, paints, cleaners, pesticides, fertilizers, bags of erodible materials like sand, cement, and soil, and other potential pollutants can negatively impact surface waters through the accidental releases or leaching of materials into stormwater. Unprotected outdoor storage areas can generate a wide range of stormwater pollutants, such as sediment, nutrients, toxic materials, and petroleum products.

POLLUTION PREVENTION MEASURES

1) Whenever possible, store containers (e.g. drums, bins, bags, cans, and totes) indoors or under cover to limit exposure to stormwater.
2) Designate specific areas for material delivery and storage that are away from heavy traffic areas, storm drains, stormwater conveyances, and areas of concentrated run-off.
3) Designated outdoor storage areas should be paved or consist of an impervious surface.
4) Provide secondary containment for materials whenever possible or required per regulation.
5) Store materials on pallets to prevent stormwater run-on from coming into contact with materials, prevent container corrosion, and allow for better leak detection. Pallets must be in good condition and promptly replaced once damaged or deteriorated.
6) Stack containers according to the manufacturer's recommendations to avoid damage.
7) Immediately replace damaged, corroded, or leaking containers.
8) Ensure all storage containers are clearly labeled with their contents.
9) Keep containers tightly sealed after use.
10) Maintain an accurate inventory of hazardous substances and limit on-site storage to that which is necessary to support facility operations.
11) Keep storage areas neat and well organized; remove debris and unneeded material promptly.
12) If empty drums are stored outdoors, ensure that all openings are equipped with caps to prevent water intrusion and that the drum/storage area is labeled "Empty Drums".
13) Have an adequate supply of appropriate spill response equipment readily available and clean up all spills and releases immediately utilizing dry cleaning techniques (e.g. sweeping/absorbents).
14) Clean up all migrating dry materials upon discovery and address the source of the release.
15) Provide perimeter controls (e.g., berms, rock check dams, etc.) for erodible stockpiles of materials such as mulch, sand, and gravel to prevent migration into the stormwater system.
16) Routinely inspect material storage areas for leaks, material migration, and damaged or corroded containers. Ensure that secondary containment and other perimeter controls are in satisfactory condition.
17) Additional visual inspections of outdoor storage areas should be conducted after significant rainfall events (i.e., greater than 0.5 inches).

BMP Fact Sheet

ABOVEGROUND STORAGE TANKS

GH-07

Not Applicable ☒ Applicable ☐

CONCERN

Aboveground storage tanks (ASTs) may be used to store fuels, automotive fluids, chemicals, or deicing fluids. Leaks from tanks, piping, or other equipment and releases during fluid transfers can all impact stormwater quality. It is critical to maintain ASTs in good working condition to prevent spills and/or releases from occurring. Improperly managed storage tanks can cause significant environmental impacts.

POLLUTION PREVENTION MEASURES

General *(applicable to all storage tanks)*

1) ASTs should be installed and maintained in accordance with COMAR 26.10 and applicable fire codes.
2) ASTs should be provided with secondary containment, whenever feasible or required by regulation.
3) Secondary containment areas shall be maintained clean and dry; drain valves must be kept closed; accumulated liquid shall only be discharged if there are no visible signs of impacts, and in accordance with applicable regulations.
4) Inspect ASTs monthly to identify any leaking or malfunctioning equipment and ensure tanks are functioning as designed.
5) ASTs shall be equipped with a form of liquid-level detection (i.e. sight gauge, electronic monitoring).
6) ASTs shall be equipped with overfill prevention (i.e. overfill alarm and/or overfill prevention valve).
7) Tanks and piping should be protected from vehicle impact via barriers, bollards, guard rails, etc.
8) Install ASTs on solid foundations over impervious surfaces, and away from areas of concentrated run-off, storm drains, and other stormwater conveyances.
9) Properly label all storage tanks (e.g., contents, capacity, etc.).
10) Keep remote fills and fill port spill buckets clean and dry.
11) Keep fill ports, gates, and tank areas secured when not in use to prevent fuel theft and tampering.
12) Have an adequate supply of appropriate spill response equipment readily available and clean up all spills and leaks immediately utilizing dry cleaning techniques (e.g. absorbents and brooms).
13) Facilities that maintain 1,320 gallons or more of aboveground oil products shall prepare and implement a Spill Prevention, Control, and Countermeasure (SPCC) Plan, per 40 CFR 112.
14) Facilities that maintain 1,000 gallons or more of used oil or 10,000 gallons or more of virgin oil in ASTs shall obtain an Individual Oil Operations Permit from the MDE, per COMAR 26.10.01.09.
15) Owners/Operators of facilities that maintain more than 2,500 gallons of oil in ASTs are required to register each AST with MDE, per COMAR 26.10.01.10.

Bulk Fluid Transfers (Deliveries)

1) All bulk fluid transfer operations shall be performed under the direct supervision of knowledgeable County personnel. At no time shall the delivery vehicle or delivery vehicle operator be unsupervised.
2) The product level within the tank must be measured and available capacity verified before delivery.
3) Deliveries shall be made via fill ports equipped with catch basins to capture drips and spills.
4) Ensure an adequate supply of appropriate spill response equipment is readily available.
5) Post signs in delivery area displaying proper delivery procedures and emergency contact information.

ABOVEGROUND STORAGE TANKS

Used Oil Tanks

1) County personnel must verify the level of product in used oil tanks prior to filling.
2) Used oil tanks should only be filled via designated fill ports. Pumping used oil into the tank via a closed piping system is preferred to manually pouring used oil into the tank.

Brine Tanks

1) If multiple tanks are located onsite, the tanks should be plumbed to ensure that the complete failure of one tank will not drain all the tanks in the system (tanks must be isolated).
2) Minimize seeping and leaking at fittings by properly supporting piping and fittings, using flexible connectors or hoses to reduce stress, and installing corrosion-resistant fittings.
3) Consider placing hoses in non-permeable trenches or using drip-less nozzles to reduce repeated small spills.

RESIDENT DROP-OFF CENTER

Not Applicable ☒ Applicable ☐

CONCERN

Resident Drop-Off Centers are publicly accessible facilities where residents can drop off used automotive fluids (i.e. oil or antifreeze), municipal waste, recyclable, and/or organic waste, typically free of charge. Improper transfer or management of the waste materials can allow a number of pollutants including oils and greases, toxic and chemical compounds, nutrients, metals, and other wastes to enter waterways.

POLLUTION PREVENTION MEASURES

General *(applicable to all materials collected)*

1) Clearly identify waste materials accepted by the facility, and clearly mark designated collection areas.
2) Waste material should be inspected by a County representative, prior to disposal.
3) Avoid positioning waste receptacles near storm drains, water bodies, or areas of concentrated runoff.
4) When practical, receiving areas should be covered.
5) Do not allow containers to overflow or waste materials to accumulate on the ground.

Automotive Fluid Collection

1) Used oil, antifreeze, and automotive fluid receiving areas should be on impervious surfaces, covered, and provided with secondary containment, which shall be maintained clean and dry.
2) Provide lidded waste receptacles in the receiving area for the public to dispose of empty containers. Waste receptacles shall be emptied routinely and waste disposed of properly.
3) Collection areas shall be inspected daily and all trash and spilled liquids appropriately cleaned up.
4) The available capacity of waste liquid collection containers shall be routinely verified and waste removals scheduled, as needed.
5) Install appropriate controls to prohibit the overfilling of waste fluid collection containers.
6) Place appropriate spill response equipment in close proximity to drop-off areas.
7) If aboveground tanks are used to collect waste fluids, refer to BMP Fact Sheet GHP-07 (Aboveground Storage Tanks) for additional recommendations.

Organic Debris Collection

1) Routinely transfer collected organic debris/waste to a composting or disposal facility.
2) Do not permit composting of organic waste except at properly designed and permitted facilities.
3) Enact controls to prevent leaves and other windblown debris from entering stormwater inlets.

Municipal Waste / Recyclables Collection

1) Refer to BMP Fact Sheet GHP-01 (Waste Management) for additional recommendations.

BMP Fact Sheet

STOCKPILES

GH-09

Not Applicable ☒ Applicable ☐

CONCERN

The County may stockpile various erodible materials, the type of material can vary depending on the needs of the County. Stockpiled material may include soil, sand, millings, slag, cinders, sawdust, landscaping bark, compost, etc. Exposed stockpiles can easily erode due to wind or precipitation and contribute suspended solids to stormwater runoff.

POLLUTION PREVENTION MEASURES

1) Maintain stockpiles of erodible materials within roofed storage buildings or covered storage bins, if feasible. If not, stockpile material on an impervious surface and cover the stockpile.
2) Temporary stockpiles should be placed on an impermeable membrane (tarp) for quick clean-up.
3) Locate stockpiles away from drain inlets, catch basins, swales, areas of concentrated stormwater flow, water bodies, and environmentally sensitive areas.
4) Divert stormwater flows away from/around the stockpiles using a diversion device (e.g., temporary swale, berm, sandbags, or diversion fence).
5) Cover temporary stockpiles of erodible materials with a tarp that has been adequately secured. The covers must be in place at all times when the stockpile is not in active use.
6) When accessing a portion of the stockpile, only remove a section of the cover to minimize exposure to the elements.
7) Use barriers to isolate stockpiled materials from high-traffic areas to prevent tracking of materials.
8) Sweep (do not wash or hose down) in front of material stockpile storage areas at regular intervals, following loading and unloading activities, and during times of heavy use.
9) If material is observed migrating from the stockpile, clean up all migrated material upon discovery and provide additional controls to reduce migration from the stockpile. If such measures are ineffective implement controls to capture pollutants before they migrate off-site (e.g. silt fencing, inlet filters, filter socks, at-grade inlet protection, etc.).
10) Minimize material stockpile inventory based on historical inventory/usage records and public safety operational needs.
11) Cold mix asphalt shall be stored on and covered with plastic sheeting or comparable material.
12) Routinely inspect outdoor material stockpiles to verify existing controls are functioning properly and for signs of erosion or material transport.

BMP Fact Sheet

DEICING MATERIALS

GH-10

Not Applicable ☒ Applicable ☐

CONCERN

When salt and other de-icing materials are stored outside and uncovered, they have a much higher risk of being eroded and transported offsite by stormwater. Improper de-icing material and sand storage may result in stormwater runoff containing elevated concentrations of sodium chloride and dissolved solids. Sodium chloride (e.g., road salt) is an effective deicer but can be highly corrosive to stormwater facilities. Smaller waterways are at a higher risk to increases in salinity, which can threaten aquatic species. Additionally, runoff containing sodium chloride has the potential to reach drinking water sources where small traces can adversely impact public health.

POLLUTION PREVENTION MEASURES

1) Bagged de-icing chemicals must be stored indoors. If stored outdoors bags must be kept on pallets (off the ground) and covered at all times. Bags must be intact without holes or openings.
2) Bulk de-icing materials shall be stored under cover and on an impervious surface.
3) Bulk salt storage areas/buildings shall not be overfilled so that salt spills out beyond the entrance of the storage area/building.
4) Bulk salt storage areas/buildings shall be maintained in a structurally sound condition and in a way that prevents the release of salt and the infiltration of stormwater. Deicing materials should not touch the sides of metal storage containers.
5) Barriers such as berms, gates, knee walls, tarps, and/or straw bales shall be placed at the entrances of bulk salt storage areas/buildings to prohibit the migration of salt and prevent contact with precipitation/stormwater runoff.
6) Routinely inspect storage areas for migrating materials or deterioration of containment structures. Sweep up all migrating materials upon discovery and repair the source of the migrating pollutant.
7) Loading areas should be constructed of impervious material and covered or enclosed, to the extent practical, to reduce potential contact with stormwater.
8) Minimize the distance de-icing materials are transported during loading/unloading activities.
9) Prevent and/or minimize the spillage of salt and de-icing materials during loading/unloading activities, immediately clean spilled or tracked materials.
10) Sweeping of storage and loading/unloading areas shall be conducted immediately following loading/unloading activities.
11) Do not store de-icing materials (bulk or bagged) over or immediately adjacent to drains or waterways.
12) Control site drainage by diverting stormwater run-on away from storage/loading areas using appropriate measures (e.g., curbing, berms, etc.).
13) Slope storage/loading areas to direct salt-contaminated runoff to an appropriate collection area, and in a manner that prevents the runoff from reaching adjacent soil or surface waters.
14) Excess salt shall be removed from salt handling equipment (trucks, spreaders, etc.) following use/prior to storage. All cleaning shall occur on an impervious surface, which is sloped or curbed to contain any washwater and direct it to a collection area for recycling or proper disposal.

Appendix A

GHP Site Inspection Checklist

GOOD HOUSEKEEPING PLAN (GHP)
SITE INSPECTION CHECKLIST

Facility Name: _____ **Inspection Date:** _____

Inspector Name: _____ **Inspector Signature:** _____

- The intent of this inspection is to ensure that the site is being properly maintained and that there are no visible signs of pollutants entering the stormwater system.
- **A shaded status box designates an item in a non-compliant status. Please provide an explanation for all non-compliant items and subsequently document all corrective actions performed.**
- Retain the completed checklists for five (5) years.

Item	Status			CORRECTIVE ACTIONS/COMMENTS *Items which cannot be corrected immediately must be reported to the GHP/NPDES Program Manager*
	Yes	No	N/A	
GENERAL HOUSEKEEPING				
1. Are exterior areas of the facility free of accumulated trash, debris, and unneeded materials?				
2. Are stormwater drains and inlets free from debris, sediment, and evidence of spills/releases?				
3. Is the facility free from signs of erosion?				
4. Are paved surfaces free of accumulated sediment?				
5. Is spill response equipment available in maintenance areas, fueling areas, hazardous material storage areas, and/or other required areas?				
6. Are spill kits and absorbent materials clearly labeled and accessible (i.e. items are not piled on top of or in front of spill kits)?				
7. Are spill kits secured from being stolen or misused?				
8. Is there a labeled container present for the disposal of used spill cleanup material?				

GOOD HOUSEKEEPING PLAN (GHP)
SITE INSPECTION CHECKLIST

Item	Status			CORRECTIVE ACTIONS/COMMENTS *Items which cannot be corrected immediately must be reported to the GHP/NPDES Program Manager*
	Yes	No	N/A	
9. Does spill response equipment (i.e. spill kits, absorbent materials) need to be replenished?				
WASTE MANAGEMENT				
10. Are areas around solid waste containers/roll-offs/compactors free of excessive trash accumulation or overflowing containers?				
11. Are areas around solid waste containers/roll-offs/compactors free of visible evidence (i.e. leaks, staining) of ongoing stormwater pollution?				
12. Are scrap metal containers in good order and free from evidence of leaking oil/grease?				
13. For dumpsters, roll-offs, and other waste receptacles, where leaks are observed, have appropriate controls (e.g. containment, spill response, etc.) been enacted?				
14. Are the lids (if present) to solid waste containers closed?				
15. Is street sweeping/vactor waste being managed appropriately (i.e. no evidence of material migration)?				
16. Is waste cooking grease managed appropriately (i.e. no evidence of spilled material or excessive staining)?				
VEHICLE & EQUIPMENT STORAGE				
17. Are stored vehicles/equipment free from leaks?				
18. If leaks are present, are they being managed appropriately (drip pan or other methods in place to capture released liquids)?				
19. Are storage areas free of visible evidence of chronic leaks/spills (i.e. significant staining)?				

GOOD HOUSEKEEPING PLAN (GHP)
SITE INSPECTION CHECKLIST

Item	Status			CORRECTIVE ACTIONS/COMMENTS *Items which cannot be corrected immediately must be reported to the GHP/NPDES Program Manager*
	Yes	No	N/A	
VEHICLE & EQUIPMENT REFUELING				
20. Are the areas around refueling areas free from evidence of spills or leaks?				
21. Are refueling areas free of used absorbent material that has not been swept/cleaned up?				
22. Do fuel dispensers and hoses appear to be in good working order and well-maintained?				
VEHICLE MAINTENANCE				
23. Is there any indication that vehicle maintenance activities are being conducted outdoors?				
24. Is there any indication that vehicle maintenance activities are contributing to stormwater pollution?				
VEHICLE & EQUIPMENT WASHING				
25. If performed on-site, does all vehicle/equipment washing occur indoors?				
26. Is wash water collected and disposed of properly?				
27. Is there any indication that vehicle/equipment wash water is being released to stormwater conveyances or pervious areas?				
MATERIAL STORAGE				
28. Are all outdoor storage areas free from visible signs of leaks or spilled material?				
29. Are material storage containers in good condition?				

GOOD HOUSEKEEPING PLAN (GHP)
SITE INSPECTION CHECKLIST

Item	Status			CORRECTIVE ACTIONS/COMMENTS *Items which cannot be corrected immediately must be reported to the GHP/NPDES Program Manager*
	Yes	No	N/A	
30. Are drums, totes, and other containers (that are <u>not</u> empty) stored off the ground and covered, or stored indoors?				
31. Are liquid-containing drums/totes located outdoors provided with secondary containment?				
32. Are containers that are located outdoors equipped with closed lids except when material transfers are occurring?				
33. Are materials, which could impact stormwater, stored away from heavy traffic areas, or protected from vehicle collisions?				
34. Are chemical storage containers properly labeled?				
35. If empty drums are stored outside, are all openings equipped with caps to prevent water intrusion?				
ABOVEGROUND STORAGE TANKS				
36. Are all storage tanks, and surrounding areas free from visible signs of leaks or spilled material?				
37. Do storage tanks appear to be in good working order (e.g. free of obvious signs of damage or malfunctioning equipment)?				
38. Are remote fills associated with tanks free of liquid and debris?				
RESIDENT DROP-OFF CENTERS				
39. Are waste collection areas clearly identified?				
40. Are used oil/antifreeze collection tanks, containment structures, and surrounding areas free from visible signs of leaks or spilled material?				

GOOD HOUSEKEEPING PLAN (GHP)
SITE INSPECTION CHECKLIST

Item	Status			CORRECTIVE ACTIONS/COMMENTS *Items which cannot be corrected immediately must be reported to the GHP/NPDES Program Manager*
	Yes	No	N/A	
41. Do used oil/antifreeze collection tanks appear to be in good working order (e.g. free of obvious signs of damage or malfunctioning equipment)?				
42. Are empty used oil/antifreeze containers being collected and disposed of in the trash?				
43. Are areas around waste/recyclables containers free of excessive trash accumulation or overflowing containers?				
44. Are areas around waste/recyclables containers free of visible evidence (i.e. leaks, staining) of ongoing stormwater pollution?				
45. Are organic debris collection areas free of visible evidence of ongoing stormwater pollution (e.g. leaves and debris in stormwater conveyances)?				
STOCKPILES				
46. Are material piles, including salt, soil, sand, and millings isolated (i.e. covered, bermed, etc.) to prevent stormwater run-on and run-off?				
47. Are areas surrounding material piles (e.g. salt, soil, sand, millings, etc.) free of tracked or migrated material?				
DEICING MATERIALS				
48. Are all deicing materials stored indoors or undercover?				
49. Are salt storage structures in good condition (e.g. no evidence of material escaping or stormwater infiltration)?				
50. Is the salt loading area clean?				

GOOD HOUSEKEEPING PLAN (GHP)
SITE INSPECTION CHECKLIST

Item	Status			CORRECTIVE ACTIONS/COMMENTS *Items which cannot be corrected immediately must be reported to the GHP/NPDES Program Manager*
	Yes	No	N/A	
51. If deicing materials are tarped, is the tarp secure and covering the entire pile?				
52. Are bags of salt stored indoors, or off the ground and covered?				

ADDITIONAL COMMENTS:

Appendix B

GHP Stormwater Conveyance System Inspection Checklist

GOOD HOUSEKEEPING PLAN (GHP)
STORMWATER CONVEYANCE SYSTEM INSPECTION CHECKLIST

Facility Name: _____ **Inspection Date:** _____

Inspector Name: _____ **Inspector Signature:** _____

- The intent of this inspection is to ensure the free flow of stormwater within on-site conveyance systems and prevent damage/flooding.
- **If maintenance is needed, please provide an explanation, and document all corrective actions performed.**
- **Inspections shall include visually accessible infrastructure only; at no time shall inspection personnel enter a confined space.**
- Retain the completed checklists for five (5) years.

Item	Item Checked (Y/N/NA)	Maintenance Needed (Y/N)	CORRECTIVE ACTIONS/COMMENTS *Items which cannot be corrected immediately must be reported to the GHP/NPDES Program Manager*
CATCH BASINS / INLETS			
1. Look for debris and sediment blocking catch basin grates. If found, remove.			
2. Look for damage or cracks to the frame, grate, basin walls or bottom. If found, schedule repairs or replacement.			
3. Look for sediment and debris in the catch basin sump. If sediment fills 60% of the sump or comes within 6” of a pipe it should be scheduled for cleaning.			
4. If any type of filtering device is present, verify that the filter is not clogged, torn, or damaged; clean if clogged, replace if damaged.			
PIPES / CULVERTS			
5. Look for evidence of clogged piping (e.g. visual obstructions, standing water within manholes/inlets structures, etc.). If found, remove or schedule cleaning.			
6. Verify vegetation growth, if present, does not impede water flow. If it does, mow, cut back, or remove.			

GOOD HOUSEKEEPING PLAN (GHP)

STORMWATER CONVEYANCE SYSTEM INSPECTION CHECKLIST

Item	Item Checked (Y/N/NA)	Maintenance Needed (Y/N)	CORRECTIVE ACTIONS/COMMENTS *Items which cannot be corrected immediately must be reported to the GHP/NPDES Program Manager*
7. Inspect for damaged piping, inlets, outlets, headwalls, wingwalls, or excessive erosion. If found, make or schedule repairs.			
DITCHES / TRAPEZOIDAL SWALES			
8. Check for erosion, slumping, or undercutting. If found, make or schedule repairs.			
9. Look for trash and sediment accumulation. Remove all trash and remove sediment if it will impede water flow or clog downstream structures.			
10. Verify vegetation growth does not impede water flow. If it does, mow, cut back, or remove. Remove any trees or shrubs growing within the ditch.			
11. Check the integrity of check dams, filter socks, or other flow dissipation/filtering devices within the ditch or swale. Perform or schedule service if they are clogged, damaged, or deteriorated.			
12. Check inlets and outlets for debris accumulation, damage, or erosion. If found, make or schedule repairs.			

ADDITIONAL COMMENTS:

GUIDANCE DOCUMENT
GOOD HOUSEKEEPING PLAN - STORMWATER CONVEYANCE INSPECTIONS

INTRODUCTION

Maintaining catch basins, stormwater inlets, and other stormwater conveyance structures on a regular basis will remove pollutants, prevent backups, and ensure the system functions as intended to avoid flooding.

Each GHP-covered facility is required to conduct routine stormwater conveyance system inspections to ensure the free flow of stormwater within the conveyance system(s). The GHP includes a *"GHP Stormwater Conveyance System Inspection Checklist"*, to be used when completing the required inspections. This document provides additional background and guidance to aid facility personnel in completing the inspections.

CATCH BASINS / INLETS

Catch basins and inlets are all points for stormwater to enter storm drain systems. These structures are typically part of a larger conveyance system with many interconnected components where the impairment of one component can compromise the functionality of the larger system. Inlets and catch basins are subject to functional impairment by a variety of conditions, including:

- Structural damage including from vehicles and plows
- Cracks/joint separation at piping (inlet and outlet) connections
- Leaking due to cracks and joint separation
- Missing or damaged grates and grate frames
- Corrosion
- Blockage caused by debris, sediment, vegetation, or other objects

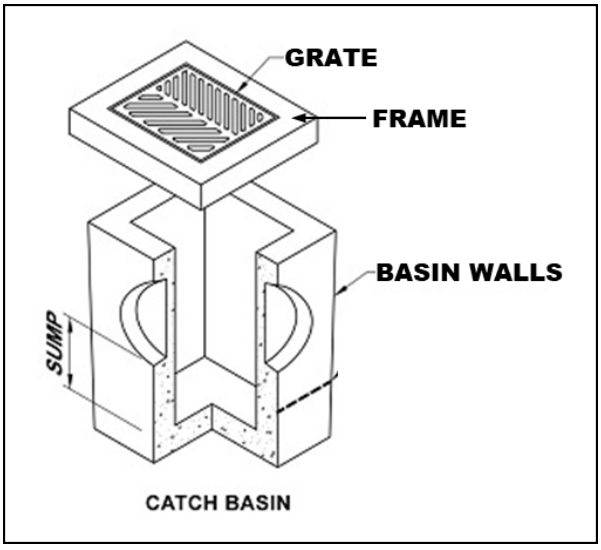

Figure 1 – Catch Basin Diagram

The following photos provide additional information related to the various inspection items, including examples of typical issues that may be encountered. The photo numbers correspond to the inspection checklist item number.

Inspection Item #1 [1]



Debris and sediment blocking inlet/catch basin grate.

Inspection Item #2 [2]



Damaged Grate

Inspection Item #2 [3]



Damaged Frame

Inspection Item #2 [4]



Failing brick walls with a stormwater inlet.

Inspection Item #2 [5]



Failing asphalt surrounding the inlet

[1] Grand Valley State University - https://www.gvsu.edu/groundswell/clogged-storm-drains-71.htm
[2] Georgia Department of Transportation – Stormwater System Inspection and Maintenance Manual, March 2020
[3] https://catchbasinauthority.ca/catch-basin-101/
[4] https://www.fixasphalt.com/catch-basin-repairs
[5] https://ccpia.org/catch-basin-and-manhole-inspections/

Inspection Item #3 [6]



Sediment and debris inside stormwater inlet

Inspection Item #3

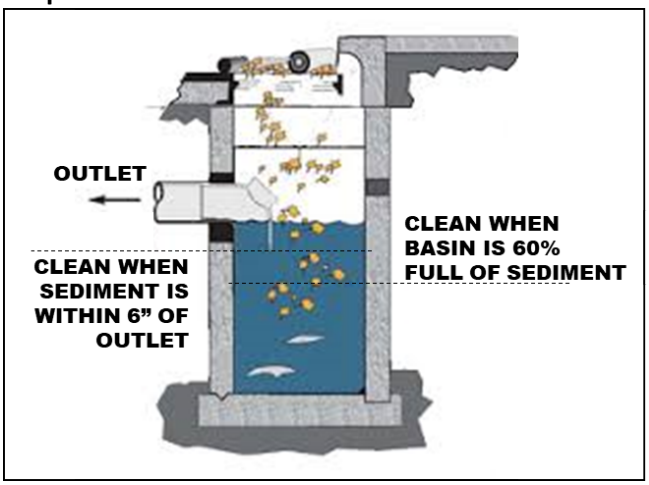

Remove sediment from a catch basin if it fills 60% of the sump or comes within 6" of a pipe.

Inspection Item #4 [7]



Example of inlet filter. Replace when filled or damaged. damaged.

Inspection Item #4 [8]



Example of an inlet filter sock, replace if

PIPES AND CULVERTS

Pipe systems are designed to convey stormwater runoff safely and effectively from inlets to various discharge points and outfalls. A culvert is a structure that channels water under an obstacle such as a roadway or railroad. These structures are subject to functional impairment by a variety of conditions, including:

- Blockage or obstruction due to build up of vegetation, debris, sediment, or other objects
- Cracks and/or joint separation
- Collapsed pipe
- Corrosion
- Root intrusion
- Lack of stabilization

[6] https://www.fixasphalt.com/catch-basin-repairs
[7] https://store.interstateproducts.com/products/Ultra-Drain-Guards/Ultra-Drain-Guard-Adjustable-Frame-Model
[8] https://www.newpig.com/pig-sediment-filter-sock/p/FLT787

Inspection Item #5 [9]



A pipe filled with sediment, inhibiting flow.

Inspection Item #5 [10]



Standing water around an inlet may indicate a blockage.

Inspection Item #6 [11]



Pipe conveyance filled with vegetation.

Inspection Item #7 [12]

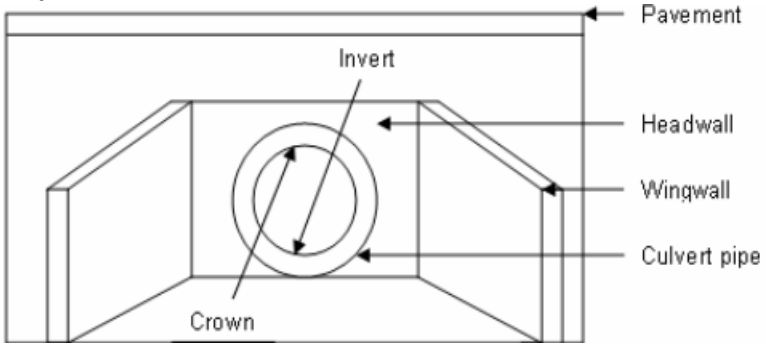

Diagram depicting various components of a culvert.

[9] Georgia Department of Transportation – Stormwater System Inspection and Maintenance Manual, March 2020
[10] https://www3.epa.gov/region9/water/npdes/stormwater-feature.html
[11] Georgia Department of Transportation – Stormwater System Inspection and Maintenance Manual, March 2020
[12] https://www.researchgate.net/figure/Components-of-a-Culvert_fig34_228685906

Inspection Item #7 [13]



A crack is the culvert headwall.

Inspection Item #7 [14]



Evidence of erosion around a culvert.

DITCHES AND SWALES

Ditches and swales serve similar functions. Both are used to convey stormwater. However, there are slight differences. A ditch is a narrow channel typically found along roads and at the edges of parking lots/driveways. A swale is like a ditch, but it is broad and shallow, and usually covered or lined with turfgrass or stone. Issues associated with these structures, which could impede their function include:

- Blockage or obstruction due to vegetation, debris, sediment, or other objects
- Erosion
- Rapidly moving water
- Lack of adequate vegetative cover for grass-lined channels

Inspection Item #8 [15]



Erosion and slumping within a drainage ditch.

Inspection Item #8 [16]



Slumping within a drainage swale.

[13] https://www.sbt-durabi.org/articles/xml/ARN0/
[14] https://lufkindailynews.com/news/local/culverts-crumbling-in-precinct-1/article_a9fed902-4379-5248-ab11-7471e2974298.html
[15] https://graniteseed.com/blog/how-to-stop-a-ditch-from-eroding/
[16] https://www.mnwcd.org/erosion-control

Inspection Item #9 [17]



Litter and debris within a ditch.

Inspection Item #9 [18]



Litter and debris within a swale.

Inspection Item #10 [19]



Cracks and joint separation in concrete channels, removal of vegetation may prevent future damage.

Inspection Item #11 [20]



Rock check dam across a channel.

Inspection Item #11 [21]



Filter sock check dams across a grass swale.

[17] https://craven.ces.ncsu.edu/2023/02/for-those-who-love-to-litter/
[18] https://www.cityoftulsa.org/government/departments/public-works/stormwater-quality/adopt-a-stream/
[19] Georgia Department of Transportation – Stormwater System Inspection and Maintenance Manual, March 2020
[20] EPA Stormwater Best Management Practice, Check Dams, December 2021
[21] EPA Stormwater Best Management Practice, Check Dams, December 2021

Inspection Item #12 [22]



Inlet to a rock-lined swale.

Inspection Item #12 [23]



Sediment accumulation at swale inlet.

END OF DOCUMENT

[22] https://www.stormwater.com/erosion-control/vegetation-management/article/13016118/inlet-protection-during-constructionand-after

[23] https://www.stormwater.com/erosion-control/vegetation-management/article/13016118/inlet-protection-during-constructionand-after

Appendix C

General Spill Response Procedures

SPILL RESPONSE AND NOTIFICATION PROCEDURES

A. Discovery of a Spill

1. Upon discovery of a spill, facility personnel should immediately assess the situation and determine if the spill is considered a "Minor" or "Major" spill. For a spill to be considered "Minor" all the following conditions must be satisfied:

    - ❖ The type of material spilled is known;
    - ❖ The spill is confined to the immediate work area;
    - ❖ The spill has not reached storm drains, sanitary sewer systems, open water, or surrounding soils;
    - ❖ The spill can be safely managed;
    - ❖ The employee can contain and clean up the spill with the PPE that is normally used in the work area;
    - ❖ The spill does not pose a serious threat of fire or an explosion; and
    - ❖ The spill does not pose conditions that are immediately dangerous to life or health.

2. If all the above conditions are met, the spill is considered "Minor". Refer to ***Section B*** of this document for appropriate response actions.

3. If all the above conditions are not met, then the spill is considered "Major". Refer to ***Section C*** of this document for appropriate response actions.

4. If a spill involves flammable liquids, ignitable vapors may be present - precautions must be taken to prevent ignition. Do not turn on or off equipment since sparks may be generated. Additionally, avoid the movement of equipment that could create static electricity. Larger spills of flammable liquids could pose a fire threat and would be considered a "Major" spill. Refer to ***Section C*** for appropriate actions.

B. Response to a "Minor" Spill

1. Identify the source of the spill and the direction in which the spill is heading.

2. Attempt to stop the spill at the source. Where applicable, the source of the spill shall be taken out of service until repairs can be made. If the spill is related to a fuel dispensing system, activate the Emergency Shut-Off (ESO) switch to prevent additional fuel disbursements.

3. If material is released outside a containment area, it is crucial that the material be contained as quickly as possible. Following proper safety procedures, use absorbent materials or diking to contain the spill. Prevent the spill from reaching storm drains, sanitary sewers, or open water. If a spill is flowing toward a drain, install temporary diking around the drain, block off the drain with a drain cover, or place absorbent material around the drain to prevent a discharge.

4. Once the spill has been stopped and contained, estimate the quantity of the spill. Consult applicable Safety Data Sheet (SDS) for material compatibility and environmental precautions. Note and follow recommendations regarding special precautions, spill response equipment, methods, or precautions. All cleanup work shall be conducted in accordance with existing safety protocols and SDS recommendations. Contact the facility Superintendent/Supervisor, or designee, for assistance if needed.

5. Recover or clean up the spilled material as much as possible. Material that cannot be reused must be discarded in accordance with state and federal regulations. Liquids absorbed by porous materials (e.g., wood, gravel, significant quantities of absorbent material, etc.) shall be placed into US DOT-approved 30-gallon or 55-gallon steel drums. Following cleanup, the container shall be secured and appropriately labeled to identify the contents and the date of the spill/cleanup. Containers shall be stored indoors and provided with secondary containment until transported off-site for disposal.

6. For spills that do not involve flammable liquids or other potential hazardous wastes, small quantities of used absorbent materials may be double bagged and disposed of along with municipal trash as long as all liquids have been absorbed (no free liquid may be present).

7. If the spilled material is a flammable liquid, corrosive liquid (pH ≤ 2 or ≥ 12.5), or other potential hazardous waste, all recovered product, impacted material, and used absorbent must be placed into a US DOT-approved containers/drums. Following cleanup, the container(s) shall be secured and appropriately labeled to identify the contents and the date of the spill/cleanup. Containers shall be stored indoors and provided with secondary containment until transported off-site for disposal. The facility Superintendent/ Supervisor, or designee shall be notified that a potential hazardous waste was released and that a waste characterization may be needed to facilitate proper disposal.

8. Surfaces that are contaminated by the spill shall be cleaned utilizing dry absorbent material. Tools and equipment that have been used in the cleanup must be decontaminated immediately after use. Decontamination water (if used) must be minimized, containerized, and disposed of properly.

9. If waste requires disposal, notify the facility Superintendent/Supervisor, or designee who will arrange for the proper characterization and disposal of any waste material. Representative sampling and analysis may be necessary to properly characterize the waste. The waste must be transported and disposed of in compliance with all applicable laws and regulations. Waste manifests, trip tickets, or bills of lading (if required) for waste disposal shall be kept on file.

10. Facility personnel shall restock/replace spill response equipment and absorbent materials used during the clean-up efforts.

11. The facility Superintendent/Supervisor, designee, or other appropriate County personnel shall be notified of the spill in accordance with ***Section D*** of this document.

C. Response to "Major" Spill

A "Major" spill is any discharge that does not meet the definition of a "Minor" spill. Any employee or contractor observing, being involved with, or recognizing a potential or actual spill of oil or other hazardous material, other than a "Minor" spill is responsible for performing the following actions:

1. If there is no danger to human health, attempt to stop and contain the spill at the source. If the spilled material is unknown, if PPE other than that which is typically used in your work area, is necessary to approach the spill area, or if assistance is required to stop the spill, do not attempt to contain the spill. If the spill is related to a fuel dispensing system, activate the Emergency Shut-Off (ESO) switch.

2. Most County employees lack the appropriate training to respond to "Major" spills. If the spill is of an unknown substance, is of a quantity that cannot be safely managed, or poses other risks beyond the training level of the employee, the employee should not attempt to contain or clean up the spill.

3. Evacuate individuals from the area and keep personnel away from the impacted area.

4. Immediately notify the facility Superintendent/Supervisor, or designee of the incident. The notified individual will determine the need for further evacuations and contact emergency response personnel (911), as necessary. *If a situation represents an immediate and grave danger to personnel, the public, structures, or other infrastructure, the individual discovering the incident may call 911 directly without first notifying facility management.*

5. The facility Superintendent/Supervisor or designee will determine if assistance from emergency response contractors is required to clean up the incident and will coordinate such spill response efforts with spill response contractors and other County agencies and first responders.

6. Facility personnel will provide assistance to emergency responders, as appropriate.

D. Reporting a Spill (Internal Notifications)

1. Once a spill is contained and cleanup operations have been initiated, the individual discovering the spill shall notify the appropriate County representatives and provide the following information:

    a) Identify the location, date, and time of the incident;
    b) Identify the type of material spilled or discharged;
    c) Estimate the quantity spilled and the rate of the spill;
    d) Identify the cause of the spill or discharge;
    e) Identify impacted media or infrastructure (soil, storm drains, open water bodies, etc.);
    f) Determine the extent of injuries involved; and
    g) Provide response measures implemented by the facility personnel.

E. Reporting a Spill (Regulatory Notifications)

State of Maryland Reporting Requirements (COMAR 26.10.01.05)

1. Upon discovery of a spill, the Responsible Person shall notify the MDE Emergency Response Division **within two (2) hours** by calling 866-633-4686. The caller shall be prepared to provide the following information:

    a) The time and date of the spill;
    b) The location and cause of the spill;
    c) The mode of transportation or type of facility involved;
    d) Type and quantity of oil spilled;
    e) Details regarding any assistance required;
    f) The name, address, and telephone number of the person making the report; and
    g) Any other pertinent information requested by the Department.

2. MDE will provide further guidance on additional responsibilities.

3. Within **ten (10) working days** of the completed removal and clean-up activities, the Responsible Person shall prepare a report using either County letterhead detailing the incident. The report shall contain the following:

    a) Date, time, and place of the spill;
    b) The amount and type of oil or hazardous substance spilled;
    c) A complete description of circumstances that contributed to the spill;
    d) A complete description of the containment and removal operations performed, including disposal sites to which oil refuse was transported;
    e) Procedures, methods, and precautions instituted to prevent the recurrence of an oil spill from the facility involved;
    f) Any other information considered necessary or required by the MDE for a complete description of the incident; and
    g) A certification that the information provided is true and correct to the knowledge of the person signing the report.

4. The completed report shall be submitted to mdeerd.mema@maryland.gov or faxed to 410-537-3932.

5. A digital copy of the completed report and any accompanying documentation shall be retained

Federal Reporting Requirements - National Response Center (40 CFR 110)

1. If any of the following criteria are met the Responsible Person shall notify the National Response Center (NRC) **within two (2) hours** of the spill discovery by calling 800-424-8802 or 202-426-2675.

    - ❖ The spill has caused a film, sheen, or discoloration of the surface water or shorelines;
    - ❖ The material spilled will violate applicable water quality standards (surface water or groundwater); or
    - ❖ The spill has caused a sludge or emulsion to be deposited beneath the surface of the water or on the shoreline.

2. At a minimum, the following information shall be provided to the NRC:

    a) Name, organization, and telephone number of reporting party;
    b) Name and address of the responsible party;
    c) Date, time, and location of the incident;
    d) Source and cause of the discharge;
    e) Type of material(s) discharged;
    f) Quantity of materials discharged;
    g) Danger or threat posed by discharge;
    h) Number and types of injuries (if any);
    i) Weather conditions at the incident location; and
    j) Other information to help emergency personnel respond to the incident.

3. If unable to report to the NRC, reports can be made to the EPA Regional Office at 800-438-2474 or the U.S. Coast Guard (USCG) at 202-372-1001. The NRC, EPA, or USCG will provide further guidance.

4. A digital record of the NRC notification and any accompanying documentation shall be retained on-site.

Federal Reporting Requirements - EPA Regional Administrator (40 CFR 112.4)

1. If the facility where the spill occurred is regulated under 40 CFR 112 and is required to have a Spill Prevention, Control, and Countermeasures (SPCC) Plan, the Responsible Person shall report the spill to the EPA Region III Administrator when any of the following criteria are met:

   - ❖ More than 1,000 gallons of oil is discharged to navigable waters or adjoining shorelines in a single incident; or
   - ❖ More than 42 gallons of oil is discharged to navigable waters or adjoining shorelines in each of two incidents occurring within any twelve-month period.

2. The report shall be made in writing **within 60 days** of the spill and shall contain:

   a) Name and location of the facility;
   b) Owner/operator name;
   c) Maximum storage/handling capacity of the facility and normal daily throughput;
   d) Corrective actions and countermeasures taken;
   e) Adequate description of the facility including maps, and flow diagrams;
   f) Cause of the discharge to navigable waters, including a failure analysis;
   g) Additional preventative measures taken or planned to minimize discharge reoccurrence; and
   h) Other information required by the EPA Regional III Administrator.

3. The report shall be submitted to the EPA Regional Administrator at the following address:

   EPA Regional Administrator
   US EPA Region 3
   1650 Arch Street (3RA00)
   Philadelphia, PA 19103-2029

4. A copy of the report shall be retained in the facility SPCC Plan.

Appendix D

Training Records

GOOD HOUSEKEEPING PLAN (GHP)
TRAINING ATTENDANCE LOG

FACILITY NAME: _____

DATE	NAME *(PRINT)*	SIGNATURE

By signing I affirm that I have completed the required annual training; and I am aware of and understand my responsibilities under this Plan.

GOOD HOUSEKEEPING PLAN (GHP)

Church Creek Pumping Station
1565 Mitchell Lane
Aberdeen, MD 21001

June 30, 2025

TABLE OF CONTENTS

1.0 BACKGROUND & INTRODUCTION 1
1.1 Objectives 1
1.2 Potential Stormwater Pollutants 1
2.0 RESPONSIBILITIES 3
2.1 GHP Implementation 3
2.2 Plan Review and Modification 3
2.3 Inspections 3
2.3.1 GHP Site Inspections 3
2.3.2 Conveyance System Inspections 4
2.4 Training 4
3.0 BEST MANAGEMENT PRACTICES (BMPs) 5
3.1 Applicability of BMP Fact Sheets 5
3.2 BMP Fact Sheets 5

List of Tables

TABLE 1-1 POTENTIAL STORMWATER POLLUTANTS AND THEIR SOURCES 2

List of BMP Fact Sheets

GH-01 - Waste Management
GH-02 - Vehicle and Equipment Storage
GH-03 - Vehicle/Equipment Refueling
GH-04 - Vehicle Maintenance
GH-05 - Vehicle/Equipment Washing
GH-06 - Material Storage
GH-07 - Aboveground Storage Tanks
GH-08 - Resident Drop-Off Centers
GH-09 - Stockpiles
GH-10 - Deicing Materials

Appendices

Appendix A: GHP Site Inspection Checklist
Appendix B: GHP Stormwater Conveyance Inspection Checklist
Appendix C: General Spill Response Procedures
Appendix D: Training Records

List of Acronyms

AST	-	Aboveground Storage Tank
BMP	-	Best Management Practice
CFR	-	Code of Federal Regulations
GHP	-	Good Housekeeping Plan
MDE	-	Maryland Department of the Environment
MS4	-	Municipal Separate Storm Sewer System
NPDES	-	National Pollutant Discharge Elimination System
SPCC	-	Spill Prevention, Control, and Countermeasure Plan

1.0 BACKGROUND & INTRODUCTION

Polluted stormwater runoff has the potential to enter the County's storm sewer systems (referred to as a municipal separate storm sewer system or MS4), and then discharge, untreated, into local water bodies. To address this potential stormwater pollution, the County is required to obtain a NPDES permit from the Maryland Department of the Environment (MDE). The NPDES Permit requires the County to take actions to prevent stormwater pollution, maintain storm sewer systems, monitor stormwater discharges, and develop and implement comprehensive management programs to minimize the discharge of pollutants from the storm sewer system.

To comply with Part IV.D.4.b of the County's Phase I MS4 Permit, the County must develop, implement, and maintain a Good Housekeeping Plan (GHP) for certain County-owned properties not required to be covered under Maryland's General Permit for Discharges from Stormwater Associated with Industrial Activities *(General Permit 12-SWA / 20-SW).*

To support this effort, a *"Good Housekeeping Plan Applicability Certification"* has been developed to evaluate and document if a specific County-owned facility is subject to the GHP requirements. The *"GHP Applicability Certification"* includes the following ten (10) potential stormwater polluting activities. If any of the covered activities are performed at the facility, then that facility is required to implement a site-specific GHP. The GHP will include each of the potential stormwater polluting activities identified in the *"GHP Applicability Certification"* and corresponding pollution prevention procedures.

- Waste Management
- Vehicle and Equipment Storage
- Vehicle/Equipment Refueling
- Vehicle Maintenance
- Vehicle/Equipment Washing
- Material Storage
- Aboveground Storage Tanks
- Resident Drop-Off Center
- Stockpiles
- Deicing Materials

1.1 Objectives

The GHP was developed to outline suitable practices, procedures, and protocols, or Best Management Practices ("BMPs") for reducing and/or preventing stormwater pollution associated with operations at covered County-owned properties. The intent of the pollution prevention procedures included in the GHP is to limit the release of materials with the potential to impact stormwater, this includes reducing or eliminating (to the extent practical):

- The occurrence of spills and leaks;
- The accidental dumping or release of materials;
- The accumulation of waste, trash, debris, unused parts/equipment, etc.;
- The exposure of hazardous materials to precipitation/run-off;
- Stormwater run-off contamination by improperly stored materials; and/or
- Illicit discharges to the storm drain system.

1.2 Potential Stormwater Pollutants

Table 1-1 on the following page provides a list of common potential pollutants that may result from the GHP-regulated activities identified above. Understanding the sources of these pollutants can help in achieving the goals and objectives of the GHP program.

TABLE 1-1 POTENTIAL STORMWATER POLLUTANTS AND THEIR SOURCES

		Waste Management	Vehicle/Equipment Storage	Vehicle/Equipment Refueling	Vehicle Maintenance	Vehicle/Equipment Washing	Material Storage	Aboveground Storage Tanks	Resident Drop-Off Center	Stockpiles	Deicing Materials
Pollutants	**Sources**	**Associated GHP Activity**									
Sediment	Land disturbance; erosion; paved surfaces; material stockpiles; waste storage; salt/abrasive application	X				X	X		X	X	X
Hydrocarbons *(petroleum compounds)*	Leaking vehicle and equipment; vehicle and equipment cleaning; spills; improper storage; maintenance activities; scrap metal disposal; improper disposal	X	X	X	X	X	X	X	X		
Metals	Vehicle brake and tire wear; vehicle/equipment exhaust; batteries; galvanized metal; paint and wood preservatives; fuels, pesticides, and cleaners; vehicle fueling, maintenance, and washing; industrial waste	X	X	X	X	X	X	X	X		
Toxic Chemicals	Pesticide application; improper chemical storage; leaks and spills from storage containers; leaking vehicles; maintenance activities	X	X		X	X	X	X	X		
Chlorides	De-Icing chemicals										X
Trash/Debris	Improper waste storage and disposal; leaking trash containers; littering; poor housekeeping	X	X				X		X		
Nutrients (nitrogen and Phosphorus)	Fertilizers; malfunctioning septic systems; sewer overflows; animal/pet waste; vehicle washing; decaying grass and leaves; leaking trash containers; atmospheric deposition	X				X	X		X		

2.0 RESPONSIBILITIES

2.1 GHP Implementation

A separate GHP is required for each covered facility. The following individual *(identified by name and/or title)* is accountable for the administration and implementation of the GHP at this facility and has the authority to commit the necessary resources to implement this Plan.

_____

Name and/or Title of Responsible Person

The Responsible Person listed above shall ensure that facility personnel involved in any GHP-covered activities identified in this Plan, are provided with access to, and are familiar with, the contents of this Plan.

2.2 Plan Review and Modification

The *"GHP Applicability Certification"* completed for this facility must be reviewed and updated once every permit term, or within one (1) year of substantial changes to a facility's operations that could reasonably contribute to stormwater pollution. Any newly constructed/acquired facility must be assessed within one (1) year of initiating operations at the facility. The facility's GHP must be amended and reissued to the facility within one (1) year of any changes to the facility's *"GHP Applicability Certification"*.

When warranted, the BMP Fact Sheets provided in Section 3.0 may need to be updated or revised. At the same time, additional BMP Facts Sheets may be added. The need for such updates or modifications will be at the discretion of the County's GHP Program Administrator.

2.3 Inspections

The County's MS4 permit requires each facility covered by a GHP to have the following:

1. Written procedures for annually assessing County properties to prevent the discharge of pollutants, spills, and leaks into the County's storm sewer system; and

2. Written procedure for performing stormwater conveyance system inspections and for removing debris that may cause clogging, backups, and flooding.

To meet these requirements, each facility that is covered by a GHP will be required to complete routine site inspections and stormwater conveyance system inspections as detailed below. Facility management will be responsible for ensuring the necessary inspections are completed within the required timeframes, that corrective actions (if needed) are performed, and that records of inspections and completed corrective actions are maintained for at least five (5) years.

2.3.1 GHP Site Inspections

The GHP Site Inspection will be performed to ensure that each GHP-covered facility is being properly maintained and that there are no visible signs of pollutants entering the stormwater system. GHP facilities shall utilize the *"GHP Site Inspection Checklist"*, provided in ***Appendix A*** to complete the required inspection. At a minimum, each facility is to be inspected every five (5) years.

2.3.2 Conveyance System Inspections

Stormwater conveyance systems are generally comprised of curbs and gutters, catch basins, inlet structures, swales, channels, piping, culverts, detention ponds, outfalls, or other structures that are used to collect, contain, and convey stormwater runoff.

The unimpeded movement of stormwater through conveyance systems is critical in avoiding backups and flooding, which can impede facility operations and damage property. Routine inspections and preventative care of stormwater conveyance systems can ensure these systems function as intended and prevent the need for costly and time-consuming repairs and retrofits.

Each GHP-covered facility is required to conduct routine stormwater conveyance system inspections to ensure the free flow of stormwater within the conveyance systems. GHP-covered facilities shall utilize the *"GHP Stormwater Conveyance System Inspection Checklist"*, provided in ***Appendix B*** to complete the required inspections. At a minimum, facility conveyance system inspections are to be conducted every five (5) years.

2.4 Training

As part of the GHP requirements within the County's Phase I NPDES permit, annual training must be provided to all appropriate staff and contractors. Such training shall be provided to any individuals responsible for implementing the GHP, performing the required inspections, or involved in any of the GHP-covered activities identified in this Plan. The required training shall focus on the duties and responsibilities assigned to site personnel in implementing the GHP and the best management practices (BMPs) prescribed in this Plan for preventing, reducing, and eliminating the discharge of pollutants during facility activities.

The County's MS4/GHP Program Coordinator will be responsible for developing the required training and disseminating it to GHP-covered facilities. Each GHP-covered facility will be responsible for identifying staff/contractors who must attend annual training, ensuring identified staff complete the required training, and maintaining records that document training dates and attendees. Training records and other documentation shall be maintained in ***Appendix D*** of this Plan.

3.0 BEST MANAGEMENT PRACTICES (BMPs)

This section contains a BMP Fact Sheet for each of the ten (10) GHP-regulated activities. The County's operations are not limited to the BMPs contained within this document; nor is the County required to implement all of the pollution prevention measures identified within each BMP Fact Sheet. The County should select and implement those measures that are applicable and have the greatest potential for reducing stormwater pollution.

The BMP Fact Sheets contained within this document offer recommended protocols for a particular activity. These pollution prevention measures are considered non-structural BMPs with a focus on source control of potential pollutants.

3.1 Applicability of BMP Fact Sheets

The *"GHP Applicability Certification"* completed for this facility has identified the activities conducted at this facility that require coverage under this Plan. Each of the BMP Fact Sheets shall be marked as to whether they are applicable or not applicable to this facility. The Applicable/Not Applicable indicator on each BMP Fact Sheet can be revised in response to changes in operations at the facility.

3.2 BMP Fact Sheets

BMP Fact Sheets can be found on the following pages. For the sake of consistency, the general outline of a BMP Fact Sheet will be as follows:

- Identification of GHP-covered activity.
- Applicability of the BMP Fact Sheet to the facility.
- A general description of the concern the activity poses to stormwater.
- Recommended pollution prevention measures for reducing/eliminating stormwater pollution.
- Additional sources of information, if applicable.

WASTE MANAGEMENT

Not Applicable ☒ Applicable ☐

CONCERN

Improperly managed waste can allow trash and debris to be washed into storm drains which poses a concern to water quality, marine life, and public health. It also has the potential to create obstructions in the drainage system, which can lead to backups and flooding. Additionally, improper storage and handling of waste materials can allow pollutants including oils and greases, toxic and chemical compounds (including nutrients), bacteria, metals, and other potentially hazardous wastes to enter waterways.

POLLUTION PREVENTION MEASURES

General *(applicable to all waste management activities)*

1) Provide suitable containers, preferably with working covers, to collect waste materials.
2) Ensure that appropriate waste containers are available in areas where waste is generated.
3) Provide a cover over waste storage areas, if feasible.
4) Avoid positioning waste receptacles near storm drains, water bodies, or areas of concentrated runoff.
5) Ensure that lids to waste containers *(if present)* are kept closed to prevent the intrusion of precipitation and prevent trash from blowing out of the receptacle.
6) For waste receptacles, which do not have lids and could leak, containers should be inspected regularly and controls (e.g., containment, spill response, etc.) shall be enacted whenever leaks or dry-weather discharges are observed.
7) Routinely inspect waste containers, roll-offs, compactors, and other waste receptacles for the presence of excessive waste accumulation and overflowing containers.
8) Ensure that wastes accumulating on the ground are placed in a suitable waste container.
9) Ensure that wastes are removed from the facility regularly by a licensed and contracted vendor.
10) Repair or replace damaged waste container lids.

Trash Compactors

1) Routinely inspect trash compactors for malfunctioning equipment or leaking hydraulic oil and provide the appropriate spill response if leaking equipment is encountered.
2) Regularly inspect compactors for leaking fluids and implement appropriate controls such as spill response/cleanup, collection or diversion of released fluids, providing secondary containment, etc. whenever leaks or dry-weather discharges are observed.

Scrap Metal Collection Containers

1) Avoid placing oily or grease-covered items in uncovered scrap metal recycling collection containers. If needed, wrap oily/greasy items in plastic garbage bags before placing them in the collection container.

Hazardous/Universal Wastes

1) Ensure that hazardous waste and universal wastes (e.g., batteries, bulbs, etc.) are collected and stored indoors or within covered collection containers.
2) Verify that hazardous/universal waste collection containers are in good condition, not leaking, and compatible with the wastes being stored.

Street Sweeping / Vactor Truck Material Storage

1) Do not site storage areas near storm drains, open water bodies, or areas of concentrated runoff.
2) Install sediment control devices (e.g. silt fence, silt socks, hay bales, etc.) around the staging area. Inspect these controls regularly and replace them as needed.
3) Cover the materials staging area, if feasible.
4) Provide oil-absorbent booms if necessary to control oily discharge. Inspect and replace booms regularly.
5) The staging area should be checked periodically for evidence of sediment migrating outside of the staging area. Material that has migrated out of the staging area should be promptly swept and returned to the staging area or disposed of.

Waste Cooking Oil/Grease

1) Maintain storage containers indoors or within a covered location, if feasible.
2) Storage containers shall be secured to prevent infiltration of precipitation and accidental/intentional spills or releases.
3) Carefully transfer waste oil/grease to the appropriate collection container to avoid spills.
4) Maintain suitable spill response equipment near collection containers. Immediately clean up any spilled oil/grease. Keep the exterior of the collection container clean and free of spilled oil/grease.
5) Provide secondary containment for collection containers, if feasible.

VEHICLE AND EQUIPMENT STORAGE

Not Applicable ☒ Applicable ☐

CONCERN

Vehicles and equipment may be stored onsite to support various County operations (e.g., construction, maintenance, snow removal, roadside assistance, mass transit, mowing, etc.). Examples of County owned and operated vehicles and equipment stored onsite at any given time include but are not limited to, the following: cars, trucks, buses, emergency response vehicles, garbage trucks, heavy equipment (backhoes, frontend loaders, etc.), forklifts, towable generators, portable light stands, and roadside equipment. Vehicle and equipment storage is considered a pollutant source due to the potential for incidental releases of petroleum products, lubricants, and various automotive fluids.

POLLUTION PREVENTION MEASURES

1) When possible/practical, store vehicles and equipment inside or under cover to prevent exposure to precipitation.
2) If vehicles or equipment must be stored outside, store vehicles/equipment in designated areas away from areas of concentrated runoff, storm drains, and other stormwater conveyances.
3) Vehicles and equipment shall be staged on impervious (asphalt or concrete) surfaces;
4) Keep truck beds clean and ensure potential stormwater pollutants are stored in closed containers, covered, or otherwise protected from stormwater exposure.
5) Conduct routine visual inspections of vehicles and equipment for the presence of leaks and respond accordingly.
6) Leaking vehicles/equipment should be moved inside or under cover. At a minimum, drip pans or absorbent pads shall be used to contain the leak until the vehicle/equipment can be relocated and the leak addressed.
7) Drain all fluids from wrecked or heavily damaged vehicles and equipment before storage.
8) Have an adequate supply of appropriate spill response equipment readily available and clean up all spills and leaks immediately utilizing dry cleaning techniques (e.g. absorbents and brooms).
9) Train staff in spill response so that incidents are addressed in a timely fashion.
10) Do not wash down areas where leaks have collected on ground surfaces; use dry cleaning methods such as granular absorbents and brooms.

VEHICLE AND EQUIPMENT REFUELING

Not Applicable ☒ Applicable ☐

CONCERN

Refueling activities associated with County vehicles and equipment can result in a discharge of fuel (gasoline and diesel fuel), which has the potential to enter the storm drain system and/or a nearby waterway. Such releases can introduce hydrocarbons, metals, and other toxic chemicals to stormwater runoff.

POLLUTION PREVENTION MEASURES

General Procedures *(applicable to all refueling activities)*

1) Routinely *(at least daily)* inspect the fuel dispensing area for any spills or leaks.
2) Routinely inspect fuel dispensing equipment looking for leaking or damaged equipment. Damaged or malfunctioning equipment shall be taken out of service until it has been repaired.
3) Fuels will only be dispensed into authorized vehicles, equipment, and approved containers.
4) Vehicle operators must remain outside of their vehicles and in attendance of fuel dispensers at all times while dispensing fuel.
5) Third-party contractors must be trained in proper refueling procedures and pollution prevention.
6) Do not utilize a foreign object to keep the dispenser nozzle in the open position. If present, a “hold-open” latch on the nozzle may be used.
7) Do not “top off” a vehicle’s fuel tank once the dispenser nozzle’s automatic shut-off has been activated. Topping off tanks may result in spills. Post signs in fueling areas warning vehicle operators against "topping off" of vehicle fuel tanks.
8) After refueling has stopped, allow several seconds to pass before removing the nozzle and returning it to the dispenser. This will prevent incidental dripping from the nozzle.
9) Employees refueling vehicles shall note the location of the “Emergency Fuel Shut Off” switch, to be used to stop the flow of fuel to the dispensers in the event of a release or emergency.
10) Have an adequate supply of appropriate spill response equipment readily available and clean up all spills immediately utilizing dry cleaning techniques (e.g. absorbents and brooms).
11) Immediately clean up and dispose of used absorbent material.
12) Do not wash down fueling areas; use dry cleaning methods such as granular absorbents and brooms.
13) Conduct refueling activities over impervious (e.g. concrete) surfaces. Place drip pans or absorbent pads under the nozzle if fueling occurs over a permeable surface such as grass or soil.
14) Install oil control devices in storm drains that may receive contaminated runoff from fueling areas.
15) Cover fueling areas with a canopy or roof to prevent direct contact with rainfall. Direct run-on away from fueling areas and collect fueling area run-off in a dead-end sump or oil-water separator.

Mobile Equipment Refueling

1) Refuel equipment on an impervious surface, downgradient of, and at the farthest practical distance from any storm drain, stormwater conveyance, stormwater management feature, or waterway.
2) Utilize secondary containment when refueling equipment (when practical).
3) Ensure mobile refuelers are parked in designated locations and away from areas of concentrated run-off, storm drains, and other stormwater conveyances.
4) Ensure that procedures are in place and that staff is properly trained in spill response/cleanup so that leaks and spills are addressed appropriately and promptly.

VEHICLE MAINTENANCE

GH-04

Not Applicable ☒ Applicable ☐

CONCERN

Vehicle and equipment maintenance can impact the water quality of nearby waterways by exposing stormwater to various pollutants including petroleum hydrocarbons, solvents, antifreeze/coolants, used oil, lubricating oil, grease, brake fluid, metals, and various chemicals. Additionally, vehicles that are wrecked or awaiting repair can be a source of pollution if leaking fluids are not properly controlled.

POLLUTION PREVENTION MEASURES

1) Conduct vehicle and equipment maintenance activities indoors.
2) Make sure incoming vehicles and equipment are inspected for leaking fluids and oil.
3) Move leaking vehicles or equipment indoors or under cover as soon as possible. At a minimum, a drip pan or absorbent pads shall be utilized to contain the leak until the vehicle/equipment can be relocated and the leak addressed.
4) Avoid performing maintenance on vehicles in close proximity to exterior doorways, which may allow released fluids to migrate outdoors.
5) Have an adequate supply of appropriate spill response equipment readily available and clean up all spills and leaks immediately utilizing dry cleaning techniques (e.g. absorbents and brooms).
6) Keep maintenance areas neat and well organized. Remove dirt, debris, and used absorbent regularly.
7) Inspect maintenance areas as well as maintenance equipment on a routine basis.
8) Store vehicles, parts, and generated wastes indoors or off the ground and under cover whenever possible. When practical, provide secondary containment.
9) Promptly transfer used fluids to the proper waste container; do not leave full drip pans or other open containers around the shop. Empty and clean drip pans and containers regularly.
10) Waste liquids shall not be poured into floor drains, sinks, outdoor storm drain inlets, or other storm drains or sewer connections. Liquid wastes are to be collected in properly labeled containers and disposed of by a licensed waste hauler or other appropriate method.
11) Store leaking batteries in a sealed container and provide secondary containment, if feasible.
12) Clean all parts indoors utilizing a self-contained parts washer.
13) Do not hose down indoor service areas to storm drains or areas where it can seep into groundwater.
14) Maintain floor drains in good working order and inspect for proper function on a routine basis. Consider plugging floor drains that discharge to the storm sewer.
15) Ensure oil/water separators (if present) are maintained in proper working order and are checked on a routine basis for the presence of oil.
16) If maintenance work must be performed outdoors, adhere to the following requirements:
    - Conduct maintenance activities over an impervious surface, away from stormwater inlets.
    - Cover outdoor maintenance areas and direct stormwater run-on away from the area.
    - Use drip pans or drop cloths underneath the equipment to catch leaks and drips.
    - Have an adequate supply of appropriate spill response equipment readily available.
    - Clean all spills immediately using dry cleaning techniques (e.g. absorbents and brooms).
    - Avoid performing maintenance activities during precipitation events.
    - Limit temporary outdoor maintenance activities to a single shift/day if additional time is needed to cover the work area at the end of each day/shift.

BMP Fact Sheet

VEHICLE AND EQUIPMENT WASHING

GH-05

Not Applicable ☒ Applicable ☐

CONCERN

Vehicle and equipment washing can generate washwater that contains oil, grease, organic compounds, surfactants, phosphates, metals, and suspended solids. If vehicles/equipment are washed outdoors on impervious surfaces, dirty washwater can contaminate stormwater that ends up in waterways. Washing equipment over pervious surfaces can allow washwater to seep into the ground contaminating groundwater.

POLLUTION PREVENTION MEASURES

1) Vehicle and equipment washing should only be conducted in designated indoor wash bays that capture and recycle washwater to the extent practical.
2) Wastewater from the washing facility should be discharged to the sanitary sewer system under the authorization of a wastewater discharge permit issued by the local municipal authority.
3) The floor of indoor vehicle wash bays should be completely bermed or sloped to collect wash water and prevent migration outdoors.
4) No other activities (e.g., fluid changes, repairs, material storage) shall be performed in wash areas.
5) Keep the wash bay neat and well organized. Sweep or pick up all trash and debris daily or as needed.
6) Solid materials accumulated on vehicles or in vehicle beds (e.g. salt, soil, grass, etc.) shall be knocked off or otherwise removed from the vehicle (while inside the wash bay) prior to washing. Solid materials shall be collected and disposed of properly.
7) For vehicles too large to completely fit in the wash bays, only the portion of the vehicle physically located in the confines of the wash bay shall be cleaned. The vehicle shall then be rotated to allow for the remaining portion of the vehicle to be washed.
8) Use nozzles that automatically turn off water when not in use and consider high-pressure, low-volume sprays.
9) Avoid detergents as much as possible. If detergents are necessary, use a biodegradable, phosphate-free detergent.
10) If discharging to an oil-water separator, use a non-emulsifying detergent.
11) Inspect floor drain systems, holding tanks, and conveyances associated with designated wash areas regularly. Maintain oil/water separators and/or process flowthrough separators on a routine basis.
12) Use commercial car washes when vehicle or equipment washing cannot be performed onsite without causing impacts to stormwater.
13) If washing must occur onsite and outdoors, use a designated impervious area that is marked with posted signs indicating proper washing procedures. This area must be bermed to contain the wash water and graded to direct the wash water to the sanitary sewer, an oil-water separator, a holding tank, a dead-end sump, or other containment area. Captured water shall be disposed of properly.
14) Avoid steam cleaning and engine/undercarriage washing which can produce high pollutant concentrations. If steam cleaning or engine washing is necessary, perform such cleanings within isolated indoor areas, and ensure wash water is treated and discharged to the sanitary sewer (if permitted to do so) or captured for off-site disposal.
15) Train staff in proper washing techniques and how to confine washing to designated wash areas.
16) Consider alternatives to washing such as using air to blow grass and debris from small equipment, wet-wiping equipment with rags, etc.

BMP Fact Sheet

MATERIAL STORAGE

GH-06

Not Applicable ☒ Applicable ☐

CONCERN

The storage of petroleum products, chemicals, paints, cleaners, pesticides, fertilizers, bags of erodible materials like sand, cement, and soil, and other potential pollutants can negatively impact surface waters through the accidental releases or leaching of materials into stormwater. Unprotected outdoor storage areas can generate a wide range of stormwater pollutants, such as sediment, nutrients, toxic materials, and petroleum products.

POLLUTION PREVENTION MEASURES

1) Whenever possible, store containers (e.g. drums, bins, bags, cans, and totes) indoors or under cover to limit exposure to stormwater.
2) Designate specific areas for material delivery and storage that are away from heavy traffic areas, storm drains, stormwater conveyances, and areas of concentrated run-off.
3) Designated outdoor storage areas should be paved or consist of an impervious surface.
4) Provide secondary containment for materials whenever possible or required per regulation.
5) Store materials on pallets to prevent stormwater run-on from coming into contact with materials, prevent container corrosion, and allow for better leak detection. Pallets must be in good condition and promptly replaced once damaged or deteriorated.
6) Stack containers according to the manufacturer's recommendations to avoid damage.
7) Immediately replace damaged, corroded, or leaking containers.
8) Ensure all storage containers are clearly labeled with their contents.
9) Keep containers tightly sealed after use.
10) Maintain an accurate inventory of hazardous substances and limit on-site storage to that which is necessary to support facility operations.
11) Keep storage areas neat and well organized; remove debris and unneeded material promptly.
12) If empty drums are stored outdoors, ensure that all openings are equipped with caps to prevent water intrusion and that the drum/storage area is labeled "Empty Drums".
13) Have an adequate supply of appropriate spill response equipment readily available and clean up all spills and releases immediately utilizing dry cleaning techniques (e.g. sweeping/absorbents).
14) Clean up all migrating dry materials upon discovery and address the source of the release.
15) Provide perimeter controls (e.g., berms, rock check dams, etc.) for erodible stockpiles of materials such as mulch, sand, and gravel to prevent migration into the stormwater system.
16) Routinely inspect material storage areas for leaks, material migration, and damaged or corroded containers. Ensure that secondary containment and other perimeter controls are in satisfactory condition.
17) Additional visual inspections of outdoor storage areas should be conducted after significant rainfall events (i.e., greater than 0.5 inches).

BMP Fact Sheet

ABOVEGROUND STORAGE TANKS

GH-07

Not Applicable ☐ Applicable ☒

CONCERN

Aboveground storage tanks (ASTs) may be used to store fuels, automotive fluids, chemicals, or deicing fluids. Leaks from tanks, piping, or other equipment and releases during fluid transfers can all impact stormwater quality. It is critical to maintain ASTs in good working condition to prevent spills and/or releases from occurring. Improperly managed storage tanks can cause significant environmental impacts.

POLLUTION PREVENTION MEASURES

General *(applicable to all storage tanks)*

1) ASTs should be installed and maintained in accordance with COMAR 26.10 and applicable fire codes.
2) ASTs should be provided with secondary containment, whenever feasible or required by regulation.
3) Secondary containment areas shall be maintained clean and dry; drain valves must be kept closed; accumulated liquid shall only be discharged if there are no visible signs of impacts, and in accordance with applicable regulations.
4) Inspect ASTs monthly to identify any leaking or malfunctioning equipment and ensure tanks are functioning as designed.
5) ASTs shall be equipped with a form of liquid-level detection (i.e. sight gauge, electronic monitoring).
6) ASTs shall be equipped with overfill prevention (i.e. overfill alarm and/or overfill prevention valve).
7) Tanks and piping should be protected from vehicle impact via barriers, bollards, guard rails, etc.
8) Install ASTs on solid foundations over impervious surfaces, and away from areas of concentrated run-off, storm drains, and other stormwater conveyances.
9) Properly label all storage tanks (e.g., contents, capacity, etc.).
10) Keep remote fills and fill port spill buckets clean and dry.
11) Keep fill ports, gates, and tank areas secured when not in use to prevent fuel theft and tampering.
12) Have an adequate supply of appropriate spill response equipment readily available and clean up all spills and leaks immediately utilizing dry cleaning techniques (e.g. absorbents and brooms).
13) Facilities that maintain 1,320 gallons or more of aboveground oil products shall prepare and implement a Spill Prevention, Control, and Countermeasure (SPCC) Plan, per 40 CFR 112.
14) Facilities that maintain 1,000 gallons or more of used oil or 10,000 gallons or more of virgin oil in ASTs shall obtain an Individual Oil Operations Permit from the MDE, per COMAR 26.10.01.09.
15) Owners/Operators of facilities that maintain more than 2,500 gallons of oil in ASTs are required to register each AST with MDE, per COMAR 26.10.01.10.

Bulk Fluid Transfers (Deliveries)

1) All bulk fluid transfer operations shall be performed under the direct supervision of knowledgeable County personnel. At no time shall the delivery vehicle or delivery vehicle operator be unsupervised.
2) The product level within the tank must be measured and available capacity verified before delivery.
3) Deliveries shall be made via fill ports equipped with catch basins to capture drips and spills.
4) Ensure an adequate supply of appropriate spill response equipment is readily available.
5) Post signs in delivery area displaying proper delivery procedures and emergency contact information.

ABOVEGROUND STORAGE TANKS

Used Oil Tanks

1) County personnel must verify the level of product in used oil tanks prior to filling.
2) Used oil tanks should only be filled via designated fill ports. Pumping used oil into the tank via a closed piping system is preferred to manually pouring used oil into the tank.

Brine Tanks

1) If multiple tanks are located onsite, the tanks should be plumbed to ensure that the complete failure of one tank will not drain all the tanks in the system (tanks must be isolated).
2) Minimize seeping and leaking at fittings by properly supporting piping and fittings, using flexible connectors or hoses to reduce stress, and installing corrosion-resistant fittings.
3) Consider placing hoses in non-permeable trenches or using drip-less nozzles to reduce repeated small spills.

RESIDENT DROP-OFF CENTER

Not Applicable ☒ Applicable ☐

CONCERN

Resident Drop-Off Centers are publicly accessible facilities where residents can drop off used automotive fluids (i.e. oil or antifreeze), municipal waste, recyclable, and/or organic waste, typically free of charge. Improper transfer or management of the waste materials can allow a number of pollutants including oils and greases, toxic and chemical compounds, nutrients, metals, and other wastes to enter waterways.

POLLUTION PREVENTION MEASURES

General *(applicable to all materials collected)*

1) Clearly identify waste materials accepted by the facility, and clearly mark designated collection areas.
2) Waste material should be inspected by a County representative, prior to disposal.
3) Avoid positioning waste receptacles near storm drains, water bodies, or areas of concentrated runoff.
4) When practical, receiving areas should be covered.
5) Do not allow containers to overflow or waste materials to accumulate on the ground.

Automotive Fluid Collection

1) Used oil, antifreeze, and automotive fluid receiving areas should be on impervious surfaces, covered, and provided with secondary containment, which shall be maintained clean and dry.
2) Provide lidded waste receptacles in the receiving area for the public to dispose of empty containers. Waste receptacles shall be emptied routinely and waste disposed of properly.
3) Collection areas shall be inspected daily and all trash and spilled liquids appropriately cleaned up.
4) The available capacity of waste liquid collection containers shall be routinely verified and waste removals scheduled, as needed.
5) Install appropriate controls to prohibit the overfilling of waste fluid collection containers.
6) Place appropriate spill response equipment in close proximity to drop-off areas.
7) If aboveground tanks are used to collect waste fluids, refer to BMP Fact Sheet GHP-07 (Aboveground Storage Tanks) for additional recommendations.

Organic Debris Collection

1) Routinely transfer collected organic debris/waste to a composting or disposal facility.
2) Do not permit composting of organic waste except at properly designed and permitted facilities.
3) Enact controls to prevent leaves and other windblown debris from entering stormwater inlets.

Municipal Waste / Recyclables Collection

1) Refer to BMP Fact Sheet GHP-01 (Waste Management) for additional recommendations.

BMP Fact Sheet

STOCKPILES

GH-09

Not Applicable ☒ Applicable ☐

CONCERN

The County may stockpile various erodible materials, the type of material can vary depending on the needs of the County. Stockpiled material may include soil, sand, millings, slag, cinders, sawdust, landscaping bark, compost, etc. Exposed stockpiles can easily erode due to wind or precipitation and contribute suspended solids to stormwater runoff.

POLLUTION PREVENTION MEASURES

1) Maintain stockpiles of erodible materials within roofed storage buildings or covered storage bins, if feasible. If not, stockpile material on an impervious surface and cover the stockpile.
2) Temporary stockpiles should be placed on an impermeable membrane (tarp) for quick clean-up.
3) Locate stockpiles away from drain inlets, catch basins, swales, areas of concentrated stormwater flow, water bodies, and environmentally sensitive areas.
4) Divert stormwater flows away from/around the stockpiles using a diversion device (e.g., temporary swale, berm, sandbags, or diversion fence).
5) Cover temporary stockpiles of erodible materials with a tarp that has been adequately secured. The covers must be in place at all times when the stockpile is not in active use.
6) When accessing a portion of the stockpile, only remove a section of the cover to minimize exposure to the elements.
7) Use barriers to isolate stockpiled materials from high-traffic areas to prevent tracking of materials.
8) Sweep (do not wash or hose down) in front of material stockpile storage areas at regular intervals, following loading and unloading activities, and during times of heavy use.
9) If material is observed migrating from the stockpile, clean up all migrated material upon discovery and provide additional controls to reduce migration from the stockpile. If such measures are ineffective implement controls to capture pollutants before they migrate off-site (e.g. silt fencing, inlet filters, filter socks, at-grade inlet protection, etc.).
10) Minimize material stockpile inventory based on historical inventory/usage records and public safety operational needs.
11) Cold mix asphalt shall be stored on and covered with plastic sheeting or comparable material.
12) Routinely inspect outdoor material stockpiles to verify existing controls are functioning properly and for signs of erosion or material transport.

BMP Fact Sheet

DEICING MATERIALS

GH-10

Not Applicable ☒ Applicable ☐

CONCERN

When salt and other de-icing materials are stored outside and uncovered, they have a much higher risk of being eroded and transported offsite by stormwater. Improper de-icing material and sand storage may result in stormwater runoff containing elevated concentrations of sodium chloride and dissolved solids. Sodium chloride (e.g., road salt) is an effective deicer but can be highly corrosive to stormwater facilities. Smaller waterways are at a higher risk to increases in salinity, which can threaten aquatic species. Additionally, runoff containing sodium chloride has the potential to reach drinking water sources where small traces can adversely impact public health.

POLLUTION PREVENTION MEASURES

1) Bagged de-icing chemicals must be stored indoors. If stored outdoors bags must be kept on pallets (off the ground) and covered at all times. Bags must be intact without holes or openings.
2) Bulk de-icing materials shall be stored under cover and on an impervious surface.
3) Bulk salt storage areas/buildings shall not be overfilled so that salt spills out beyond the entrance of the storage area/building.
4) Bulk salt storage areas/buildings shall be maintained in a structurally sound condition and in a way that prevents the release of salt and the infiltration of stormwater. Deicing materials should not touch the sides of metal storage containers.
5) Barriers such as berms, gates, knee walls, tarps, and/or straw bales shall be placed at the entrances of bulk salt storage areas/buildings to prohibit the migration of salt and prevent contact with precipitation/stormwater runoff.
6) Routinely inspect storage areas for migrating materials or deterioration of containment structures. Sweep up all migrating materials upon discovery and repair the source of the migrating pollutant.
7) Loading areas should be constructed of impervious material and covered or enclosed, to the extent practical, to reduce potential contact with stormwater.
8) Minimize the distance de-icing materials are transported during loading/unloading activities.
9) Prevent and/or minimize the spillage of salt and de-icing materials during loading/unloading activities, immediately clean spilled or tracked materials.
10) Sweeping of storage and loading/unloading areas shall be conducted immediately following loading/unloading activities.
11) Do not store de-icing materials (bulk or bagged) over or immediately adjacent to drains or waterways.
12) Control site drainage by diverting stormwater run-on away from storage/loading areas using appropriate measures (e.g., curbing, berms, etc.).
13) Slope storage/loading areas to direct salt-contaminated runoff to an appropriate collection area, and in a manner that prevents the runoff from reaching adjacent soil or surface waters.
14) Excess salt shall be removed from salt handling equipment (trucks, spreaders, etc.) following use/prior to storage. All cleaning shall occur on an impervious surface, which is sloped or curbed to contain any washwater and direct it to a collection area for recycling or proper disposal.

Appendix A

GHP Site Inspection Checklist

GOOD HOUSEKEEPING PLAN (GHP)
SITE INSPECTION CHECKLIST

Facility Name: _____ **Inspection Date:** _____

Inspector Name: _____ **Inspector Signature:** _____

- The intent of this inspection is to ensure that the site is being properly maintained and that there are no visible signs of pollutants entering the stormwater system.
- **A shaded status box designates an item in a non-compliant status. Please provide an explanation for all non-compliant items and subsequently document all corrective actions performed.**
- Retain the completed checklists for five (5) years.

Item	Status			CORRECTIVE ACTIONS/COMMENTS *Items which cannot be corrected immediately must be reported to the GHP/NPDES Program Manager*
	Yes	No	N/A	
GENERAL HOUSEKEEPING				
1. Are exterior areas of the facility free of accumulated trash, debris, and unneeded materials?				
2. Are stormwater drains and inlets free from debris, sediment, and evidence of spills/releases?				
3. Is the facility free from signs of erosion?				
4. Are paved surfaces free of accumulated sediment?				
5. Is spill response equipment available in maintenance areas, fueling areas, hazardous material storage areas, and/or other required areas?				
6. Are spill kits and absorbent materials clearly labeled and accessible (i.e. items are not piled on top of or in front of spill kits)?				
7. Are spill kits secured from being stolen or misused?				
8. Is there a labeled container present for the disposal of used spill cleanup material?				

GOOD HOUSEKEEPING PLAN (GHP)
SITE INSPECTION CHECKLIST

Item	Status			CORRECTIVE ACTIONS/COMMENTS *Items which cannot be corrected immediately must be reported to the GHP/NPDES Program Manager*
	Yes	No	N/A	
9. Does spill response equipment (i.e. spill kits, absorbent materials) need to be replenished?				
WASTE MANAGEMENT				
10. Are areas around solid waste containers/roll-offs/compactors free of excessive trash accumulation or overflowing containers?				
11. Are areas around solid waste containers/roll-offs/compactors free of visible evidence (i.e. leaks, staining) of ongoing stormwater pollution?				
12. Are scrap metal containers in good order and free from evidence of leaking oil/grease?				
13. For dumpsters, roll-offs, and other waste receptacles, where leaks are observed, have appropriate controls (e.g. containment, spill response, etc.) been enacted?				
14. Are the lids (if present) to solid waste containers closed?				
15. Is street sweeping/vactor waste being managed appropriately (i.e. no evidence of material migration)?				
16. Is waste cooking grease managed appropriately (i.e. no evidence of spilled material or excessive staining)?				
VEHICLE & EQUIPMENT STORAGE				
17. Are stored vehicles/equipment free from leaks?				
18. If leaks are present, are they being managed appropriately (drip pan or other methods in place to capture released liquids)?				
19. Are storage areas free of visible evidence of chronic leaks/spills (i.e. significant staining)?				

GOOD HOUSEKEEPING PLAN (GHP)
SITE INSPECTION CHECKLIST

Item	Status			CORRECTIVE ACTIONS/COMMENTS *Items which cannot be corrected immediately must be reported to the GHP/NPDES Program Manager*
	Yes	No	N/A	
VEHICLE & EQUIPMENT REFUELING				
20. Are the areas around refueling areas free from evidence of spills or leaks?				
21. Are refueling areas free of used absorbent material that has not been swept/cleaned up?				
22. Do fuel dispensers and hoses appear to be in good working order and well-maintained?				
VEHICLE MAINTENANCE				
23. Is there any indication that vehicle maintenance activities are being conducted outdoors?				
24. Is there any indication that vehicle maintenance activities are contributing to stormwater pollution?				
VEHICLE & EQUIPMENT WASHING				
25. If performed on-site, does all vehicle/equipment washing occur indoors?				
26. Is wash water collected and disposed of properly?				
27. Is there any indication that vehicle/equipment wash water is being released to stormwater conveyances or pervious areas?				
MATERIAL STORAGE				
28. Are all outdoor storage areas free from visible signs of leaks or spilled material?				
29. Are material storage containers in good condition?				

GOOD HOUSEKEEPING PLAN (GHP)
SITE INSPECTION CHECKLIST

Item	Status			CORRECTIVE ACTIONS/COMMENTS *Items which cannot be corrected immediately must be reported to the GHP/NPDES Program Manager*
	Yes	No	N/A	
30. Are drums, totes, and other containers (that are <u>not</u> empty) stored off the ground and covered, or stored indoors?				
31. Are liquid-containing drums/totes located outdoors provided with secondary containment?				
32. Are containers that are located outdoors equipped with closed lids except when material transfers are occurring?				
33. Are materials, which could impact stormwater, stored away from heavy traffic areas, or protected from vehicle collisions?				
34. Are chemical storage containers properly labeled?				
35. If empty drums are stored outside, are all openings equipped with caps to prevent water intrusion?				
ABOVEGROUND STORAGE TANKS				
36. Are all storage tanks, and surrounding areas free from visible signs of leaks or spilled material?				
37. Do storage tanks appear to be in good working order (e.g. free of obvious signs of damage or malfunctioning equipment)?				
38. Are remote fills associated with tanks free of liquid and debris?				
RESIDENT DROP-OFF CENTERS				
39. Are waste collection areas clearly identified?				
40. Are used oil/antifreeze collection tanks, containment structures, and surrounding areas free from visible signs of leaks or spilled material?				

GOOD HOUSEKEEPING PLAN (GHP)
SITE INSPECTION CHECKLIST

Item	Status			CORRECTIVE ACTIONS/COMMENTS *Items which cannot be corrected immediately must be reported to the GHP/NPDES Program Manager*
	Yes	No	N/A	
41. Do used oil/antifreeze collection tanks appear to be in good working order (e.g. free of obvious signs of damage or malfunctioning equipment)?				
42. Are empty used oil/antifreeze containers being collected and disposed of in the trash?				
43. Are areas around waste/recyclables containers free of excessive trash accumulation or overflowing containers?				
44. Are areas around waste/recyclables containers free of visible evidence (i.e. leaks, staining) of ongoing stormwater pollution?				
45. Are organic debris collection areas free of visible evidence of ongoing stormwater pollution (e.g. leaves and debris in stormwater conveyances)?				
STOCKPILES				
46. Are material piles, including salt, soil, sand, and millings isolated (i.e. covered, bermed, etc.) to prevent stormwater run-on and run-off?				
47. Are areas surrounding material piles (e.g. salt, soil, sand, millings, etc.) free of tracked or migrated material?				
DEICING MATERIALS				
48. Are all deicing materials stored indoors or undercover?				
49. Are salt storage structures in good condition (e.g. no evidence of material escaping or stormwater infiltration)?				
50. Is the salt loading area clean?				

GOOD HOUSEKEEPING PLAN (GHP)
SITE INSPECTION CHECKLIST

Item	Status			CORRECTIVE ACTIONS/COMMENTS *Items which cannot be corrected immediately must be reported to the GHP/NPDES Program Manager*
	Yes	No	N/A	
51. If deicing materials are tarped, is the tarp secure and covering the entire pile?				
52. Are bags of salt stored indoors, or off the ground and covered?				

ADDITIONAL COMMENTS:

Appendix B

GHP Stormwater Conveyance System Inspection Checklist

GOOD HOUSEKEEPING PLAN (GHP)
STORMWATER CONVEYANCE SYSTEM INSPECTION CHECKLIST

Facility Name: _____ **Inspection Date:** _____

Inspector Name: _____ **Inspector Signature:** _____

- The intent of this inspection is to ensure the free flow of stormwater within on-site conveyance systems and prevent damage/flooding.
- **If maintenance is needed, please provide an explanation, and document all corrective actions performed.**
- **Inspections shall include visually accessible infrastructure only; at no time shall inspection personnel enter a confined space.**
- Retain the completed checklists for five (5) years.

Item	Item Checked (Y/N/NA)	Maintenance Needed (Y/N)	CORRECTIVE ACTIONS/COMMENTS *Items which cannot be corrected immediately must be reported to the GHP/NPDES Program Manager*
CATCH BASINS / INLETS			
1. Look for debris and sediment blocking catch basin grates. If found, remove.			
2. Look for damage or cracks to the frame, grate, basin walls or bottom. If found, schedule repairs or replacement.			
3. Look for sediment and debris in the catch basin sump. If sediment fills 60% of the sump or comes within 6” of a pipe it should be scheduled for cleaning.			
4. If any type of filtering device is present, verify that the filter is not clogged, torn, or damaged; clean if clogged, replace if damaged.			
PIPES / CULVERTS			
5. Look for evidence of clogged piping (e.g. visual obstructions, standing water within manholes/inlets structures, etc.). If found, remove or schedule cleaning.			
6. Verify vegetation growth, if present, does not impede water flow. If it does, mow, cut back, or remove.			

GOOD HOUSEKEEPING PLAN (GHP)

STORMWATER CONVEYANCE SYSTEM INSPECTION CHECKLIST

Item	Item Checked (Y/N/NA)	Maintenance Needed (Y/N)	CORRECTIVE ACTIONS/COMMENTS *Items which cannot be corrected immediately must be reported to the GHP/NPDES Program Manager*
7. Inspect for damaged piping, inlets, outlets, headwalls, wingwalls, or excessive erosion. If found, make or schedule repairs.			
DITCHES / TRAPEZOIDAL SWALES			
8. Check for erosion, slumping, or undercutting. If found, make or schedule repairs.			
9. Look for trash and sediment accumulation. Remove all trash and remove sediment if it will impede water flow or clog downstream structures.			
10. Verify vegetation growth does not impede water flow. If it does, mow, cut back, or remove. Remove any trees or shrubs growing within the ditch.			
11. Check the integrity of check dams, filter socks, or other flow dissipation/filtering devices within the ditch or swale. Perform or schedule service if they are clogged, damaged, or deteriorated.			
12. Check inlets and outlets for debris accumulation, damage, or erosion. If found, make or schedule repairs.			

ADDITIONAL COMMENTS:

GUIDANCE DOCUMENT
GOOD HOUSEKEEPING PLAN - STORMWATER CONVEYANCE INSPECTIONS

INTRODUCTION

Maintaining catch basins, stormwater inlets, and other stormwater conveyance structures on a regular basis will remove pollutants, prevent backups, and ensure the system functions as intended to avoid flooding.

Each GHP-covered facility is required to conduct routine stormwater conveyance system inspections to ensure the free flow of stormwater within the conveyance system(s). The GHP includes a *"GHP Stormwater Conveyance System Inspection Checklist"*, to be used when completing the required inspections. This document provides additional background and guidance to aid facility personnel in completing the inspections.

CATCH BASINS / INLETS

Catch basins and inlets are all points for stormwater to enter storm drain systems. These structures are typically part of a larger conveyance system with many interconnected components where the impairment of one component can compromise the functionality of the larger system. Inlets and catch basins are subject to functional impairment by a variety of conditions, including:

- Structural damage including from vehicles and plows
- Cracks/joint separation at piping (inlet and outlet) connections
- Leaking due to cracks and joint separation
- Missing or damaged grates and grate frames
- Corrosion
- Blockage caused by debris, sediment, vegetation, or other objects

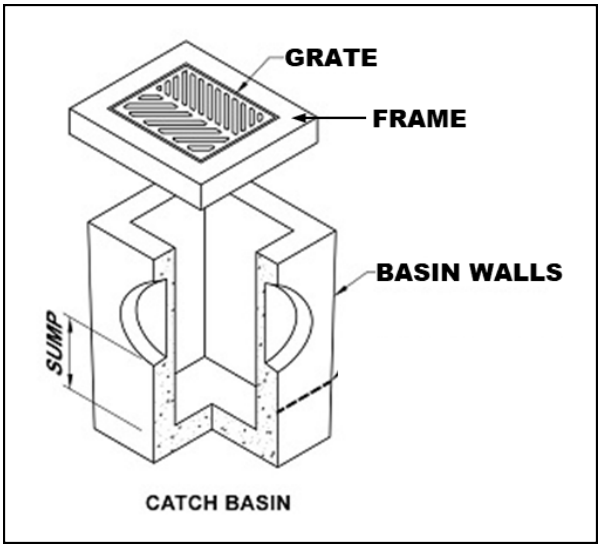

Figure 1 – Catch Basin Diagram

The following photos provide additional information related to the various inspection items, including examples of typical issues that may be encountered. The photo numbers correspond to the inspection checklist item number.

Inspection Item #1 [1]



Debris and sediment blocking inlet/catch basin grate.

Inspection Item #2 [2]



Damaged Grate

Inspection Item #2 [3]



Damaged Frame

Inspection Item #2 [4]



Failing brick walls with a stormwater inlet.

Inspection Item #2 [5]



Failing asphalt surrounding the inlet

[1] Grand Valley State University - https://www.gvsu.edu/groundswell/clogged-storm-drains-71.htm
[2] Georgia Department of Transportation – Stormwater System Inspection and Maintenance Manual, March 2020
[3] https://catchbasinauthority.ca/catch-basin-101/
[4] https://www.fixasphalt.com/catch-basin-repairs
[5] https://ccpia.org/catch-basin-and-manhole-inspections/

Inspection Item #3 [6]



Sediment and debris inside stormwater inlet

Inspection Item #3

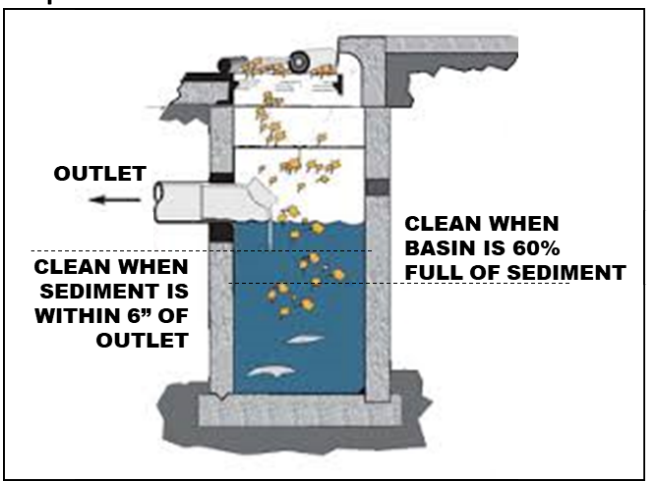

Remove sediment from a catch basin if it fills 60% of the sump or comes within 6" of a pipe.

Inspection Item #4 [7]



Example of inlet filter. Replace when filled or damaged. damaged.

Inspection Item #4 [8]



Example of an inlet filter sock, replace if

PIPES AND CULVERTS

Pipe systems are designed to convey stormwater runoff safely and effectively from inlets to various discharge points and outfalls. A culvert is a structure that channels water under an obstacle such as a roadway or railroad. These structures are subject to functional impairment by a variety of conditions, including:

- Blockage or obstruction due to build up of vegetation, debris, sediment, or other objects
- Cracks and/or joint separation
- Collapsed pipe
- Corrosion
- Root intrusion
- Lack of stabilization

[6] https://www.fixasphalt.com/catch-basin-repairs
[7] https://store.interstateproducts.com/products/Ultra-Drain-Guards/Ultra-Drain-Guard-Adjustable-Frame-Model
[8] https://www.newpig.com/pig-sediment-filter-sock/p/FLT787

Inspection Item #5 [9]



A pipe filled with sediment, inhibiting flow.

Inspection Item #5 [10]



Standing water around an inlet may indicate a blockage.

Inspection Item #6 [11]



Pipe conveyance filled with vegetation.

Inspection Item #7 [12]

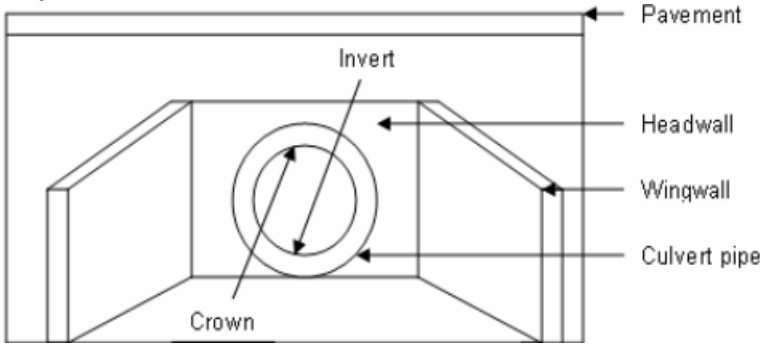

Diagram depicting various components of a culvert.

[9] Georgia Department of Transportation – Stormwater System Inspection and Maintenance Manual, March 2020
[10] https://www3.epa.gov/region9/water/npdes/stormwater-feature.html
[11] Georgia Department of Transportation – Stormwater System Inspection and Maintenance Manual, March 2020
[12] https://www.researchgate.net/figure/Components-of-a-Culvert_fig34_228685906

Inspection Item #7 [13]



A crack is the culvert headwall.

Inspection Item #7 [14]



Evidence of erosion around a culvert.

DITCHES AND SWALES

Ditches and swales serve similar functions. Both are used to convey stormwater. However, there are slight differences. A ditch is a narrow channel typically found along roads and at the edges of parking lots/driveways. A swale is like a ditch, but it is broad and shallow, and usually covered or lined with turfgrass or stone. Issues associated with these structures, which could impede their function include:

- Blockage or obstruction due to vegetation, debris, sediment, or other objects
- Erosion
- Rapidly moving water
- Lack of adequate vegetative cover for grass-lined channels

Inspection Item #8 [15]



Erosion and slumping within a drainage ditch.

Inspection Item #8 [16]



Slumping within a drainage swale.

[13] https://www.sbt-durabi.org/articles/xml/ARN0/
[14] https://lufkindailynews.com/news/local/culverts-crumbling-in-precinct-1/article_a9fed902-4379-5248-ab11-7471e2974298.html
[15] https://graniteseed.com/blog/how-to-stop-a-ditch-from-eroding/
[16] https://www.mnwcd.org/erosion-control

Inspection Item #9 [17]



Litter and debris within a ditch.

Inspection Item #9 [18]



Litter and debris within a swale.

Inspection Item #10 [19]



Cracks and joint separation in concrete channels, removal of vegetation may prevent future damage.

Inspection Item #11 [20]



Rock check dam across a channel.

Inspection Item #11 [21]



Filter sock check dams across a grass swale.

[17] https://craven.ces.ncsu.edu/2023/02/for-those-who-love-to-litter/
[18] https://www.cityoftulsa.org/government/departments/public-works/stormwater-quality/adopt-a-stream/
[19] Georgia Department of Transportation – Stormwater System Inspection and Maintenance Manual, March 2020
[20] EPA Stormwater Best Management Practice, Check Dams, December 2021
[21] EPA Stormwater Best Management Practice, Check Dams, December 2021

Inspection Item #12 [22]



Inlet to a rock-lined swale.

Inspection Item #12 [23]



Sediment accumulation at swale inlet.

END OF DOCUMENT

[22] https://www.stormwater.com/erosion-control/vegetation-management/article/13016118/inlet-protection-during-constructionand-after

[23] https://www.stormwater.com/erosion-control/vegetation-management/article/13016118/inlet-protection-during-constructionand-after

Appendix C

General Spill Response Procedures

SPILL RESPONSE AND NOTIFICATION PROCEDURES

A. Discovery of a Spill

1. Upon discovery of a spill, facility personnel should immediately assess the situation and determine if the spill is considered a "Minor" or "Major" spill. For a spill to be considered "Minor" all the following conditions must be satisfied:

    - ❖ The type of material spilled is known;
    - ❖ The spill is confined to the immediate work area;
    - ❖ The spill has not reached storm drains, sanitary sewer systems, open water, or surrounding soils;
    - ❖ The spill can be safely managed;
    - ❖ The employee can contain and clean up the spill with the PPE that is normally used in the work area;
    - ❖ The spill does not pose a serious threat of fire or an explosion; and
    - ❖ The spill does not pose conditions that are immediately dangerous to life or health.

2. If all the above conditions are met, the spill is considered "Minor". Refer to ***Section B*** of this document for appropriate response actions.

3. If all the above conditions are not met, then the spill is considered "Major". Refer to ***Section C*** of this document for appropriate response actions.

4. If a spill involves flammable liquids, ignitable vapors may be present - precautions must be taken to prevent ignition. Do not turn on or off equipment since sparks may be generated. Additionally, avoid the movement of equipment that could create static electricity. Larger spills of flammable liquids could pose a fire threat and would be considered a "Major" spill. Refer to ***Section C*** for appropriate actions.

B. Response to a "Minor" Spill

1. Identify the source of the spill and the direction in which the spill is heading.

2. Attempt to stop the spill at the source. Where applicable, the source of the spill shall be taken out of service until repairs can be made. If the spill is related to a fuel dispensing system, activate the Emergency Shut-Off (ESO) switch to prevent additional fuel disbursements.

3. If material is released outside a containment area, it is crucial that the material be contained as quickly as possible. Following proper safety procedures, use absorbent materials or diking to contain the spill. Prevent the spill from reaching storm drains, sanitary sewers, or open water. If a spill is flowing toward a drain, install temporary diking around the drain, block off the drain with a drain cover, or place absorbent material around the drain to prevent a discharge.

4. Once the spill has been stopped and contained, estimate the quantity of the spill. Consult applicable Safety Data Sheet (SDS) for material compatibility and environmental precautions. Note and follow recommendations regarding special precautions, spill response equipment, methods, or precautions. All cleanup work shall be conducted in accordance with existing safety protocols and SDS recommendations. Contact the facility Superintendent/Supervisor, or designee, for assistance if needed.

5. Recover or clean up the spilled material as much as possible. Material that cannot be reused must be discarded in accordance with state and federal regulations. Liquids absorbed by porous materials (e.g., wood, gravel, significant quantities of absorbent material, etc.) shall be placed into US DOT-approved 30-gallon or 55-gallon steel drums. Following cleanup, the container shall be secured and appropriately labeled to identify the contents and the date of the spill/cleanup. Containers shall be stored indoors and provided with secondary containment until transported off-site for disposal.

6. For spills that do not involve flammable liquids or other potential hazardous wastes, small quantities of used absorbent materials may be double bagged and disposed of along with municipal trash as long as all liquids have been absorbed (no free liquid may be present).

7. If the spilled material is a flammable liquid, corrosive liquid (pH ≤ 2 or ≥ 12.5), or other potential hazardous waste, all recovered product, impacted material, and used absorbent must be placed into a US DOT-approved containers/drums. Following cleanup, the container(s) shall be secured and appropriately labeled to identify the contents and the date of the spill/cleanup. Containers shall be stored indoors and provided with secondary containment until transported off-site for disposal. The facility Superintendent/ Supervisor, or designee shall be notified that a potential hazardous waste was released and that a waste characterization may be needed to facilitate proper disposal.

8. Surfaces that are contaminated by the spill shall be cleaned utilizing dry absorbent material. Tools and equipment that have been used in the cleanup must be decontaminated immediately after use. Decontamination water (if used) must be minimized, containerized, and disposed of properly.

9. If waste requires disposal, notify the facility Superintendent/Supervisor, or designee who will arrange for the proper characterization and disposal of any waste material. Representative sampling and analysis may be necessary to properly characterize the waste. The waste must be transported and disposed of in compliance with all applicable laws and regulations. Waste manifests, trip tickets, or bills of lading (if required) for waste disposal shall be kept on file.

10. Facility personnel shall restock/replace spill response equipment and absorbent materials used during the clean-up efforts.

11. The facility Superintendent/Supervisor, designee, or other appropriate County personnel shall be notified of the spill in accordance with ***Section D*** of this document.

C. Response to "Major" Spill

A "Major" spill is any discharge that does not meet the definition of a "Minor" spill. Any employee or contractor observing, being involved with, or recognizing a potential or actual spill of oil or other hazardous material, other than a "Minor" spill is responsible for performing the following actions:

1. If there is no danger to human health, attempt to stop and contain the spill at the source. If the spilled material is unknown, if PPE other than that which is typically used in your work area, is necessary to approach the spill area, or if assistance is required to stop the spill, do not attempt to contain the spill. If the spill is related to a fuel dispensing system, activate the Emergency Shut-Off (ESO) switch.

2. Most County employees lack the appropriate training to respond to "Major" spills. If the spill is of an unknown substance, is of a quantity that cannot be safely managed, or poses other risks beyond the training level of the employee, the employee should not attempt to contain or clean up the spill.

3. Evacuate individuals from the area and keep personnel away from the impacted area.

4. Immediately notify the facility Superintendent/Supervisor, or designee of the incident. The notified individual will determine the need for further evacuations and contact emergency response personnel (911), as necessary. *If a situation represents an immediate and grave danger to personnel, the public, structures, or other infrastructure, the individual discovering the incident may call 911 directly without first notifying facility management.*

5. The facility Superintendent/Supervisor or designee will determine if assistance from emergency response contractors is required to clean up the incident and will coordinate such spill response efforts with spill response contractors and other County agencies and first responders.

6. Facility personnel will provide assistance to emergency responders, as appropriate.

D. Reporting a Spill (Internal Notifications)

1. Once a spill is contained and cleanup operations have been initiated, the individual discovering the spill shall notify the appropriate County representatives and provide the following information:

    a) Identify the location, date, and time of the incident;
    b) Identify the type of material spilled or discharged;
    c) Estimate the quantity spilled and the rate of the spill;
    d) Identify the cause of the spill or discharge;
    e) Identify impacted media or infrastructure (soil, storm drains, open water bodies, etc.);
    f) Determine the extent of injuries involved; and
    g) Provide response measures implemented by the facility personnel.

E. Reporting a Spill (Regulatory Notifications)

State of Maryland Reporting Requirements (COMAR 26.10.01.05)

1. Upon discovery of a spill, the Responsible Person shall notify the MDE Emergency Response Division **within two (2) hours** by calling 866-633-4686. The caller shall be prepared to provide the following information:

    a) The time and date of the spill;
    b) The location and cause of the spill;
    c) The mode of transportation or type of facility involved;
    d) Type and quantity of oil spilled;
    e) Details regarding any assistance required;
    f) The name, address, and telephone number of the person making the report; and
    g) Any other pertinent information requested by the Department.

2. MDE will provide further guidance on additional responsibilities.

3. Within **ten (10) working days** of the completed removal and clean-up activities, the Responsible Person shall prepare a report using either County letterhead detailing the incident. The report shall contain the following:

    a) Date, time, and place of the spill;
    b) The amount and type of oil or hazardous substance spilled;
    c) A complete description of circumstances that contributed to the spill;
    d) A complete description of the containment and removal operations performed, including disposal sites to which oil refuse was transported;
    e) Procedures, methods, and precautions instituted to prevent the recurrence of an oil spill from the facility involved;
    f) Any other information considered necessary or required by the MDE for a complete description of the incident; and
    g) A certification that the information provided is true and correct to the knowledge of the person signing the report.

4. The completed report shall be submitted to mdeerd.mema@maryland.gov or faxed to 410-537-3932.

5. A digital copy of the completed report and any accompanying documentation shall be retained

Federal Reporting Requirements - National Response Center (40 CFR 110)

1. If any of the following criteria are met the Responsible Person shall notify the National Response Center (NRC) **within two (2) hours** of the spill discovery by calling 800-424-8802 or 202-426-2675.

    - ❖ The spill has caused a film, sheen, or discoloration of the surface water or shorelines;
    - ❖ The material spilled will violate applicable water quality standards (surface water or groundwater); or
    - ❖ The spill has caused a sludge or emulsion to be deposited beneath the surface of the water or on the shoreline.

2. At a minimum, the following information shall be provided to the NRC:

    a) Name, organization, and telephone number of reporting party;
    b) Name and address of the responsible party;
    c) Date, time, and location of the incident;
    d) Source and cause of the discharge;
    e) Type of material(s) discharged;
    f) Quantity of materials discharged;
    g) Danger or threat posed by discharge;
    h) Number and types of injuries (if any);
    i) Weather conditions at the incident location; and
    j) Other information to help emergency personnel respond to the incident.

3. If unable to report to the NRC, reports can be made to the EPA Regional Office at 800-438-2474 or the U.S. Coast Guard (USCG) at 202-372-1001. The NRC, EPA, or USCG will provide further guidance.

4. A digital record of the NRC notification and any accompanying documentation shall be retained on-site.

Federal Reporting Requirements - EPA Regional Administrator (40 CFR 112.4)

1. If the facility where the spill occurred is regulated under 40 CFR 112 and is required to have a Spill Prevention, Control, and Countermeasures (SPCC) Plan, the Responsible Person shall report the spill to the EPA Region III Administrator when any of the following criteria are met:

   - ❖ More than 1,000 gallons of oil is discharged to navigable waters or adjoining shorelines in a single incident; or
   - ❖ More than 42 gallons of oil is discharged to navigable waters or adjoining shorelines in each of two incidents occurring within any twelve-month period.

2. The report shall be made in writing **within 60 days** of the spill and shall contain:

   a) Name and location of the facility;
   b) Owner/operator name;
   c) Maximum storage/handling capacity of the facility and normal daily throughput;
   d) Corrective actions and countermeasures taken;
   e) Adequate description of the facility including maps, and flow diagrams;
   f) Cause of the discharge to navigable waters, including a failure analysis;
   g) Additional preventative measures taken or planned to minimize discharge reoccurrence; and
   h) Other information required by the EPA Regional III Administrator.

3. The report shall be submitted to the EPA Regional Administrator at the following address:

   EPA Regional Administrator
   US EPA Region 3
   1650 Arch Street (3RA00)
   Philadelphia, PA 19103-2029

4. A copy of the report shall be retained in the facility SPCC Plan.

Appendix D

Training Records

GOOD HOUSEKEEPING PLAN (GHP)
TRAINING ATTENDANCE LOG

FACILITY NAME: _____

DATE	NAME *(PRINT)*	SIGNATURE

By signing I affirm that I have completed the required annual training; and I am aware of and understand my responsibilities under this Plan.

GOOD HOUSEKEEPING PLAN (GHP)

Country Walk Pumping Station
503 Country Walk Court
Abingdon, MD 21009

June 30, 2025

TABLE OF CONTENTS

1.0 BACKGROUND & INTRODUCTION 1
1.1 Objectives 1
1.2 Potential Stormwater Pollutants 1
2.0 RESPONSIBILITIES 3
2.1 GHP Implementation 3
2.2 Plan Review and Modification 3
2.3 Inspections 3
2.3.1 GHP Site Inspections 3
2.3.2 Conveyance System Inspections 4
2.4 Training 4
3.0 BEST MANAGEMENT PRACTICES (BMPs) 5
3.1 Applicability of BMP Fact Sheets 5
3.2 BMP Fact Sheets 5

List of Tables

TABLE 1-1 POTENTIAL STORMWATER POLLUTANTS AND THEIR SOURCES 2

List of BMP Fact Sheets

GH-01 - Waste Management
GH-02 - Vehicle and Equipment Storage
GH-03 - Vehicle/Equipment Refueling
GH-04 - Vehicle Maintenance
GH-05 - Vehicle/Equipment Washing
GH-06 - Material Storage
GH-07 - Aboveground Storage Tanks
GH-08 - Resident Drop-Off Centers
GH-09 - Stockpiles
GH-10 - Deicing Materials

Appendices

Appendix A: GHP Site Inspection Checklist
Appendix B: GHP Stormwater Conveyance Inspection Checklist
Appendix C: General Spill Response Procedures
Appendix D: Training Records

List of Acronyms

AST	-	Aboveground Storage Tank
BMP	-	Best Management Practice
CFR	-	Code of Federal Regulations
GHP	-	Good Housekeeping Plan
MDE	-	Maryland Department of the Environment
MS4	-	Municipal Separate Storm Sewer System
NPDES	-	National Pollutant Discharge Elimination System
SPCC	-	Spill Prevention, Control, and Countermeasure Plan

1.0 BACKGROUND & INTRODUCTION

Polluted stormwater runoff has the potential to enter the County's storm sewer systems (referred to as a municipal separate storm sewer system or MS4), and then discharge, untreated, into local water bodies. To address this potential stormwater pollution, the County is required to obtain a NPDES permit from the Maryland Department of the Environment (MDE). The NPDES Permit requires the County to take actions to prevent stormwater pollution, maintain storm sewer systems, monitor stormwater discharges, and develop and implement comprehensive management programs to minimize the discharge of pollutants from the storm sewer system.

To comply with Part IV.D.4.b of the County's Phase I MS4 Permit, the County must develop, implement, and maintain a Good Housekeeping Plan (GHP) for certain County-owned properties not required to be covered under Maryland's General Permit for Discharges from Stormwater Associated with Industrial Activities *(General Permit 12-SWA / 20-SW).*

To support this effort, a *"Good Housekeeping Plan Applicability Certification"* has been developed to evaluate and document if a specific County-owned facility is subject to the GHP requirements. The *"GHP Applicability Certification"* includes the following ten (10) potential stormwater polluting activities. If any of the covered activities are performed at the facility, then that facility is required to implement a site-specific GHP. The GHP will include each of the potential stormwater polluting activities identified in the *"GHP Applicability Certification"* and corresponding pollution prevention procedures.

- Waste Management
- Vehicle and Equipment Storage
- Vehicle/Equipment Refueling
- Vehicle Maintenance
- Vehicle/Equipment Washing
- Material Storage
- Aboveground Storage Tanks
- Resident Drop-Off Center
- Stockpiles
- Deicing Materials

1.1 Objectives

The GHP was developed to outline suitable practices, procedures, and protocols, or Best Management Practices ("BMPs") for reducing and/or preventing stormwater pollution associated with operations at covered County-owned properties. The intent of the pollution prevention procedures included in the GHP is to limit the release of materials with the potential to impact stormwater, this includes reducing or eliminating (to the extent practical):

- The occurrence of spills and leaks;
- The accidental dumping or release of materials;
- The accumulation of waste, trash, debris, unused parts/equipment, etc.;
- The exposure of hazardous materials to precipitation/run-off;
- Stormwater run-off contamination by improperly stored materials; and/or
- Illicit discharges to the storm drain system.

1.2 Potential Stormwater Pollutants

Table 1-1 on the following page provides a list of common potential pollutants that may result from the GHP-regulated activities identified above. Understanding the sources of these pollutants can help in achieving the goals and objectives of the GHP program.

TABLE 1-1 POTENTIAL STORMWATER POLLUTANTS AND THEIR SOURCES

		Waste Management	Vehicle/Equipment Storage	Vehicle/Equipment Refueling	Vehicle Maintenance	Vehicle/Equipment Washing	Material Storage	Aboveground Storage Tanks	Resident Drop-Off Center	Stockpiles	Deicing Materials
Pollutants	**Sources**	**Associated GHP Activity**									
Sediment	Land disturbance; erosion; paved surfaces; material stockpiles; waste storage; salt/abrasive application	X				X	X		X	X	X
Hydrocarbons *(petroleum compounds)*	Leaking vehicle and equipment; vehicle and equipment cleaning; spills; improper storage; maintenance activities; scrap metal disposal; improper disposal	X	X	X	X	X	X	X	X		
Metals	Vehicle brake and tire wear; vehicle/equipment exhaust; batteries; galvanized metal; paint and wood preservatives; fuels, pesticides, and cleaners; vehicle fueling, maintenance, and washing; industrial waste	X	X	X	X	X	X	X	X		
Toxic Chemicals	Pesticide application; improper chemical storage; leaks and spills from storage containers; leaking vehicles; maintenance activities	X	X		X	X	X	X	X		
Chlorides	De-Icing chemicals										X
Trash/Debris	Improper waste storage and disposal; leaking trash containers; littering; poor housekeeping	X	X				X		X		
Nutrients (nitrogen and Phosphorus)	Fertilizers; malfunctioning septic systems; sewer overflows; animal/pet waste; vehicle washing; decaying grass and leaves; leaking trash containers; atmospheric deposition	X				X	X		X		

2.0 RESPONSIBILITIES

2.1 GHP Implementation

A separate GHP is required for each covered facility. The following individual *(identified by name and/or title)* is accountable for the administration and implementation of the GHP at this facility and has the authority to commit the necessary resources to implement this Plan.

_____

Name and/or Title of Responsible Person

The Responsible Person listed above shall ensure that facility personnel involved in any GHP-covered activities identified in this Plan, are provided with access to, and are familiar with, the contents of this Plan.

2.2 Plan Review and Modification

The *"GHP Applicability Certification"* completed for this facility must be reviewed and updated once every permit term, or within one (1) year of substantial changes to a facility's operations that could reasonably contribute to stormwater pollution. Any newly constructed/acquired facility must be assessed within one (1) year of initiating operations at the facility. The facility's GHP must be amended and reissued to the facility within one (1) year of any changes to the facility's *"GHP Applicability Certification"*.

When warranted, the BMP Fact Sheets provided in Section 3.0 may need to be updated or revised. At the same time, additional BMP Facts Sheets may be added. The need for such updates or modifications will be at the discretion of the County's GHP Program Administrator.

2.3 Inspections

The County's MS4 permit requires each facility covered by a GHP to have the following:

1. Written procedures for annually assessing County properties to prevent the discharge of pollutants, spills, and leaks into the County's storm sewer system; and

2. Written procedure for performing stormwater conveyance system inspections and for removing debris that may cause clogging, backups, and flooding.

To meet these requirements, each facility that is covered by a GHP will be required to complete routine site inspections and stormwater conveyance system inspections as detailed below. Facility management will be responsible for ensuring the necessary inspections are completed within the required timeframes, that corrective actions (if needed) are performed, and that records of inspections and completed corrective actions are maintained for at least five (5) years.

2.3.1 GHP Site Inspections

The GHP Site Inspection will be performed to ensure that each GHP-covered facility is being properly maintained and that there are no visible signs of pollutants entering the stormwater system. GHP facilities shall utilize the *"GHP Site Inspection Checklist"*, provided in ***Appendix A*** to complete the required inspection. At a minimum, each facility is to be inspected every five (5) years.

2.3.2 Conveyance System Inspections

Stormwater conveyance systems are generally comprised of curbs and gutters, catch basins, inlet structures, swales, channels, piping, culverts, detention ponds, outfalls, or other structures that are used to collect, contain, and convey stormwater runoff.

The unimpeded movement of stormwater through conveyance systems is critical in avoiding backups and flooding, which can impede facility operations and damage property. Routine inspections and preventative care of stormwater conveyance systems can ensure these systems function as intended and prevent the need for costly and time-consuming repairs and retrofits.

Each GHP-covered facility is required to conduct routine stormwater conveyance system inspections to ensure the free flow of stormwater within the conveyance systems. GHP-covered facilities shall utilize the *"GHP Stormwater Conveyance System Inspection Checklist"*, provided in ***Appendix B*** to complete the required inspections. At a minimum, facility conveyance system inspections are to be conducted every five (5) years.

2.4 Training

As part of the GHP requirements within the County's Phase I NPDES permit, annual training must be provided to all appropriate staff and contractors. Such training shall be provided to any individuals responsible for implementing the GHP, performing the required inspections, or involved in any of the GHP-covered activities identified in this Plan. The required training shall focus on the duties and responsibilities assigned to site personnel in implementing the GHP and the best management practices (BMPs) prescribed in this Plan for preventing, reducing, and eliminating the discharge of pollutants during facility activities.

The County's MS4/GHP Program Coordinator will be responsible for developing the required training and disseminating it to GHP-covered facilities. Each GHP-covered facility will be responsible for identifying staff/contractors who must attend annual training, ensuring identified staff complete the required training, and maintaining records that document training dates and attendees. Training records and other documentation shall be maintained in ***Appendix D*** of this Plan.

3.0 BEST MANAGEMENT PRACTICES (BMPs)

This section contains a BMP Fact Sheet for each of the ten (10) GHP-regulated activities. The County's operations are not limited to the BMPs contained within this document; nor is the County required to implement all of the pollution prevention measures identified within each BMP Fact Sheet. The County should select and implement those measures that are applicable and have the greatest potential for reducing stormwater pollution.

The BMP Fact Sheets contained within this document offer recommended protocols for a particular activity. These pollution prevention measures are considered non-structural BMPs with a focus on source control of potential pollutants.

3.1 Applicability of BMP Fact Sheets

The *"GHP Applicability Certification"* completed for this facility has identified the activities conducted at this facility that require coverage under this Plan. Each of the BMP Fact Sheets shall be marked as to whether they are applicable or not applicable to this facility. The Applicable/Not Applicable indicator on each BMP Fact Sheet can be revised in response to changes in operations at the facility.

3.2 BMP Fact Sheets

BMP Fact Sheets can be found on the following pages. For the sake of consistency, the general outline of a BMP Fact Sheet will be as follows:

- Identification of GHP-covered activity.
- Applicability of the BMP Fact Sheet to the facility.
- A general description of the concern the activity poses to stormwater.
- Recommended pollution prevention measures for reducing/eliminating stormwater pollution.
- Additional sources of information, if applicable.

WASTE MANAGEMENT

Not Applicable ☒ Applicable ☐

CONCERN

Improperly managed waste can allow trash and debris to be washed into storm drains which poses a concern to water quality, marine life, and public health. It also has the potential to create obstructions in the drainage system, which can lead to backups and flooding. Additionally, improper storage and handling of waste materials can allow pollutants including oils and greases, toxic and chemical compounds (including nutrients), bacteria, metals, and other potentially hazardous wastes to enter waterways.

POLLUTION PREVENTION MEASURES

General *(applicable to all waste management activities)*

1) Provide suitable containers, preferably with working covers, to collect waste materials.
2) Ensure that appropriate waste containers are available in areas where waste is generated.
3) Provide a cover over waste storage areas, if feasible.
4) Avoid positioning waste receptacles near storm drains, water bodies, or areas of concentrated runoff.
5) Ensure that lids to waste containers *(if present)* are kept closed to prevent the intrusion of precipitation and prevent trash from blowing out of the receptacle.
6) For waste receptacles, which do not have lids and could leak, containers should be inspected regularly and controls (e.g., containment, spill response, etc.) shall be enacted whenever leaks or dry-weather discharges are observed.
7) Routinely inspect waste containers, roll-offs, compactors, and other waste receptacles for the presence of excessive waste accumulation and overflowing containers.
8) Ensure that wastes accumulating on the ground are placed in a suitable waste container.
9) Ensure that wastes are removed from the facility regularly by a licensed and contracted vendor.
10) Repair or replace damaged waste container lids.

Trash Compactors

1) Routinely inspect trash compactors for malfunctioning equipment or leaking hydraulic oil and provide the appropriate spill response if leaking equipment is encountered.
2) Regularly inspect compactors for leaking fluids and implement appropriate controls such as spill response/cleanup, collection or diversion of released fluids, providing secondary containment, etc. whenever leaks or dry-weather discharges are observed.

Scrap Metal Collection Containers

1) Avoid placing oily or grease-covered items in uncovered scrap metal recycling collection containers. If needed, wrap oily/greasy items in plastic garbage bags before placing them in the collection container.

Hazardous/Universal Wastes

1) Ensure that hazardous waste and universal wastes (e.g., batteries, bulbs, etc.) are collected and stored indoors or within covered collection containers.
2) Verify that hazardous/universal waste collection containers are in good condition, not leaking, and compatible with the wastes being stored.

Street Sweeping / Vactor Truck Material Storage

1) Do not site storage areas near storm drains, open water bodies, or areas of concentrated runoff.
2) Install sediment control devices (e.g. silt fence, silt socks, hay bales, etc.) around the staging area. Inspect these controls regularly and replace them as needed.
3) Cover the materials staging area, if feasible.
4) Provide oil-absorbent booms if necessary to control oily discharge. Inspect and replace booms regularly.
5) The staging area should be checked periodically for evidence of sediment migrating outside of the staging area. Material that has migrated out of the staging area should be promptly swept and returned to the staging area or disposed of.

Waste Cooking Oil/Grease

1) Maintain storage containers indoors or within a covered location, if feasible.
2) Storage containers shall be secured to prevent infiltration of precipitation and accidental/intentional spills or releases.
3) Carefully transfer waste oil/grease to the appropriate collection container to avoid spills.
4) Maintain suitable spill response equipment near collection containers. Immediately clean up any spilled oil/grease. Keep the exterior of the collection container clean and free of spilled oil/grease.
5) Provide secondary containment for collection containers, if feasible.

VEHICLE AND EQUIPMENT STORAGE

Not Applicable ☒ Applicable ☐

CONCERN

Vehicles and equipment may be stored onsite to support various County operations (e.g., construction, maintenance, snow removal, roadside assistance, mass transit, mowing, etc.). Examples of County owned and operated vehicles and equipment stored onsite at any given time include but are not limited to, the following: cars, trucks, buses, emergency response vehicles, garbage trucks, heavy equipment (backhoes, frontend loaders, etc.), forklifts, towable generators, portable light stands, and roadside equipment. Vehicle and equipment storage is considered a pollutant source due to the potential for incidental releases of petroleum products, lubricants, and various automotive fluids.

POLLUTION PREVENTION MEASURES

1) When possible/practical, store vehicles and equipment inside or under cover to prevent exposure to precipitation.
2) If vehicles or equipment must be stored outside, store vehicles/equipment in designated areas away from areas of concentrated runoff, storm drains, and other stormwater conveyances.
3) Vehicles and equipment shall be staged on impervious (asphalt or concrete) surfaces;
4) Keep truck beds clean and ensure potential stormwater pollutants are stored in closed containers, covered, or otherwise protected from stormwater exposure.
5) Conduct routine visual inspections of vehicles and equipment for the presence of leaks and respond accordingly.
6) Leaking vehicles/equipment should be moved inside or under cover. At a minimum, drip pans or absorbent pads shall be used to contain the leak until the vehicle/equipment can be relocated and the leak addressed.
7) Drain all fluids from wrecked or heavily damaged vehicles and equipment before storage.
8) Have an adequate supply of appropriate spill response equipment readily available and clean up all spills and leaks immediately utilizing dry cleaning techniques (e.g. absorbents and brooms).
9) Train staff in spill response so that incidents are addressed in a timely fashion.
10) Do not wash down areas where leaks have collected on ground surfaces; use dry cleaning methods such as granular absorbents and brooms.

VEHICLE AND EQUIPMENT REFUELING

Not Applicable ☒ Applicable ☐

CONCERN

Refueling activities associated with County vehicles and equipment can result in a discharge of fuel (gasoline and diesel fuel), which has the potential to enter the storm drain system and/or a nearby waterway. Such releases can introduce hydrocarbons, metals, and other toxic chemicals to stormwater runoff.

POLLUTION PREVENTION MEASURES

General Procedures *(applicable to all refueling activities)*

1) Routinely *(at least daily)* inspect the fuel dispensing area for any spills or leaks.
2) Routinely inspect fuel dispensing equipment looking for leaking or damaged equipment. Damaged or malfunctioning equipment shall be taken out of service until it has been repaired.
3) Fuels will only be dispensed into authorized vehicles, equipment, and approved containers.
4) Vehicle operators must remain outside of their vehicles and in attendance of fuel dispensers at all times while dispensing fuel.
5) Third-party contractors must be trained in proper refueling procedures and pollution prevention.
6) Do not utilize a foreign object to keep the dispenser nozzle in the open position. If present, a “hold-open” latch on the nozzle may be used.
7) Do not “top off” a vehicle’s fuel tank once the dispenser nozzle’s automatic shut-off has been activated. Topping off tanks may result in spills. Post signs in fueling areas warning vehicle operators against "topping off" of vehicle fuel tanks.
8) After refueling has stopped, allow several seconds to pass before removing the nozzle and returning it to the dispenser. This will prevent incidental dripping from the nozzle.
9) Employees refueling vehicles shall note the location of the “Emergency Fuel Shut Off” switch, to be used to stop the flow of fuel to the dispensers in the event of a release or emergency.
10) Have an adequate supply of appropriate spill response equipment readily available and clean up all spills immediately utilizing dry cleaning techniques (e.g. absorbents and brooms).
11) Immediately clean up and dispose of used absorbent material.
12) Do not wash down fueling areas; use dry cleaning methods such as granular absorbents and brooms.
13) Conduct refueling activities over impervious (e.g. concrete) surfaces. Place drip pans or absorbent pads under the nozzle if fueling occurs over a permeable surface such as grass or soil.
14) Install oil control devices in storm drains that may receive contaminated runoff from fueling areas.
15) Cover fueling areas with a canopy or roof to prevent direct contact with rainfall. Direct run-on away from fueling areas and collect fueling area run-off in a dead-end sump or oil-water separator.

Mobile Equipment Refueling

1) Refuel equipment on an impervious surface, downgradient of, and at the farthest practical distance from any storm drain, stormwater conveyance, stormwater management feature, or waterway.
2) Utilize secondary containment when refueling equipment (when practical).
3) Ensure mobile refuelers are parked in designated locations and away from areas of concentrated run-off, storm drains, and other stormwater conveyances.
4) Ensure that procedures are in place and that staff is properly trained in spill response/cleanup so that leaks and spills are addressed appropriately and promptly.

VEHICLE MAINTENANCE

GH-04

Not Applicable ☒ Applicable ☐

CONCERN

Vehicle and equipment maintenance can impact the water quality of nearby waterways by exposing stormwater to various pollutants including petroleum hydrocarbons, solvents, antifreeze/coolants, used oil, lubricating oil, grease, brake fluid, metals, and various chemicals. Additionally, vehicles that are wrecked or awaiting repair can be a source of pollution if leaking fluids are not properly controlled.

POLLUTION PREVENTION MEASURES

1) Conduct vehicle and equipment maintenance activities indoors.
2) Make sure incoming vehicles and equipment are inspected for leaking fluids and oil.
3) Move leaking vehicles or equipment indoors or under cover as soon as possible. At a minimum, a drip pan or absorbent pads shall be utilized to contain the leak until the vehicle/equipment can be relocated and the leak addressed.
4) Avoid performing maintenance on vehicles in close proximity to exterior doorways, which may allow released fluids to migrate outdoors.
5) Have an adequate supply of appropriate spill response equipment readily available and clean up all spills and leaks immediately utilizing dry cleaning techniques (e.g. absorbents and brooms).
6) Keep maintenance areas neat and well organized. Remove dirt, debris, and used absorbent regularly.
7) Inspect maintenance areas as well as maintenance equipment on a routine basis.
8) Store vehicles, parts, and generated wastes indoors or off the ground and under cover whenever possible. When practical, provide secondary containment.
9) Promptly transfer used fluids to the proper waste container; do not leave full drip pans or other open containers around the shop. Empty and clean drip pans and containers regularly.
10) Waste liquids shall not be poured into floor drains, sinks, outdoor storm drain inlets, or other storm drains or sewer connections. Liquid wastes are to be collected in properly labeled containers and disposed of by a licensed waste hauler or other appropriate method.
11) Store leaking batteries in a sealed container and provide secondary containment, if feasible.
12) Clean all parts indoors utilizing a self-contained parts washer.
13) Do not hose down indoor service areas to storm drains or areas where it can seep into groundwater.
14) Maintain floor drains in good working order and inspect for proper function on a routine basis. Consider plugging floor drains that discharge to the storm sewer.
15) Ensure oil/water separators (if present) are maintained in proper working order and are checked on a routine basis for the presence of oil.
16) If maintenance work must be performed outdoors, adhere to the following requirements:
    - Conduct maintenance activities over an impervious surface, away from stormwater inlets.
    - Cover outdoor maintenance areas and direct stormwater run-on away from the area.
    - Use drip pans or drop cloths underneath the equipment to catch leaks and drips.
    - Have an adequate supply of appropriate spill response equipment readily available.
    - Clean all spills immediately using dry cleaning techniques (e.g. absorbents and brooms).
    - Avoid performing maintenance activities during precipitation events.
    - Limit temporary outdoor maintenance activities to a single shift/day if additional time is needed to cover the work area at the end of each day/shift.

BMP Fact Sheet

VEHICLE AND EQUIPMENT WASHING

GH-05

Not Applicable ☒ Applicable ☐

CONCERN

Vehicle and equipment washing can generate washwater that contains oil, grease, organic compounds, surfactants, phosphates, metals, and suspended solids. If vehicles/equipment are washed outdoors on impervious surfaces, dirty washwater can contaminate stormwater that ends up in waterways. Washing equipment over pervious surfaces can allow washwater to seep into the ground contaminating groundwater.

POLLUTION PREVENTION MEASURES

1) Vehicle and equipment washing should only be conducted in designated indoor wash bays that capture and recycle washwater to the extent practical.
2) Wastewater from the washing facility should be discharged to the sanitary sewer system under the authorization of a wastewater discharge permit issued by the local municipal authority.
3) The floor of indoor vehicle wash bays should be completely bermed or sloped to collect wash water and prevent migration outdoors.
4) No other activities (e.g., fluid changes, repairs, material storage) shall be performed in wash areas.
5) Keep the wash bay neat and well organized. Sweep or pick up all trash and debris daily or as needed.
6) Solid materials accumulated on vehicles or in vehicle beds (e.g. salt, soil, grass, etc.) shall be knocked off or otherwise removed from the vehicle (while inside the wash bay) prior to washing. Solid materials shall be collected and disposed of properly.
7) For vehicles too large to completely fit in the wash bays, only the portion of the vehicle physically located in the confines of the wash bay shall be cleaned. The vehicle shall then be rotated to allow for the remaining portion of the vehicle to be washed.
8) Use nozzles that automatically turn off water when not in use and consider high-pressure, low-volume sprays.
9) Avoid detergents as much as possible. If detergents are necessary, use a biodegradable, phosphate-free detergent.
10) If discharging to an oil-water separator, use a non-emulsifying detergent.
11) Inspect floor drain systems, holding tanks, and conveyances associated with designated wash areas regularly. Maintain oil/water separators and/or process flowthrough separators on a routine basis.
12) Use commercial car washes when vehicle or equipment washing cannot be performed onsite without causing impacts to stormwater.
13) If washing must occur onsite and outdoors, use a designated impervious area that is marked with posted signs indicating proper washing procedures. This area must be bermed to contain the wash water and graded to direct the wash water to the sanitary sewer, an oil-water separator, a holding tank, a dead-end sump, or other containment area. Captured water shall be disposed of properly.
14) Avoid steam cleaning and engine/undercarriage washing which can produce high pollutant concentrations. If steam cleaning or engine washing is necessary, perform such cleanings within isolated indoor areas, and ensure wash water is treated and discharged to the sanitary sewer (if permitted to do so) or captured for off-site disposal.
15) Train staff in proper washing techniques and how to confine washing to designated wash areas.
16) Consider alternatives to washing such as using air to blow grass and debris from small equipment, wet-wiping equipment with rags, etc.

BMP Fact Sheet

MATERIAL STORAGE

GH-06

Not Applicable ☒ Applicable ☐

CONCERN

The storage of petroleum products, chemicals, paints, cleaners, pesticides, fertilizers, bags of erodible materials like sand, cement, and soil, and other potential pollutants can negatively impact surface waters through the accidental releases or leaching of materials into stormwater. Unprotected outdoor storage areas can generate a wide range of stormwater pollutants, such as sediment, nutrients, toxic materials, and petroleum products.

POLLUTION PREVENTION MEASURES

1) Whenever possible, store containers (e.g. drums, bins, bags, cans, and totes) indoors or under cover to limit exposure to stormwater.
2) Designate specific areas for material delivery and storage that are away from heavy traffic areas, storm drains, stormwater conveyances, and areas of concentrated run-off.
3) Designated outdoor storage areas should be paved or consist of an impervious surface.
4) Provide secondary containment for materials whenever possible or required per regulation.
5) Store materials on pallets to prevent stormwater run-on from coming into contact with materials, prevent container corrosion, and allow for better leak detection. Pallets must be in good condition and promptly replaced once damaged or deteriorated.
6) Stack containers according to the manufacturer's recommendations to avoid damage.
7) Immediately replace damaged, corroded, or leaking containers.
8) Ensure all storage containers are clearly labeled with their contents.
9) Keep containers tightly sealed after use.
10) Maintain an accurate inventory of hazardous substances and limit on-site storage to that which is necessary to support facility operations.
11) Keep storage areas neat and well organized; remove debris and unneeded material promptly.
12) If empty drums are stored outdoors, ensure that all openings are equipped with caps to prevent water intrusion and that the drum/storage area is labeled "Empty Drums".
13) Have an adequate supply of appropriate spill response equipment readily available and clean up all spills and releases immediately utilizing dry cleaning techniques (e.g. sweeping/absorbents).
14) Clean up all migrating dry materials upon discovery and address the source of the release.
15) Provide perimeter controls (e.g., berms, rock check dams, etc.) for erodible stockpiles of materials such as mulch, sand, and gravel to prevent migration into the stormwater system.
16) Routinely inspect material storage areas for leaks, material migration, and damaged or corroded containers. Ensure that secondary containment and other perimeter controls are in satisfactory condition.
17) Additional visual inspections of outdoor storage areas should be conducted after significant rainfall events (i.e., greater than 0.5 inches).

BMP Fact Sheet

ABOVEGROUND STORAGE TANKS

GH-07

Not Applicable ☐ Applicable ☒

CONCERN

Aboveground storage tanks (ASTs) may be used to store fuels, automotive fluids, chemicals, or deicing fluids. Leaks from tanks, piping, or other equipment and releases during fluid transfers can all impact stormwater quality. It is critical to maintain ASTs in good working condition to prevent spills and/or releases from occurring. Improperly managed storage tanks can cause significant environmental impacts.

POLLUTION PREVENTION MEASURES

General *(applicable to all storage tanks)*

1) ASTs should be installed and maintained in accordance with COMAR 26.10 and applicable fire codes.
2) ASTs should be provided with secondary containment, whenever feasible or required by regulation.
3) Secondary containment areas shall be maintained clean and dry; drain valves must be kept closed; accumulated liquid shall only be discharged if there are no visible signs of impacts, and in accordance with applicable regulations.
4) Inspect ASTs monthly to identify any leaking or malfunctioning equipment and ensure tanks are functioning as designed.
5) ASTs shall be equipped with a form of liquid-level detection (i.e. sight gauge, electronic monitoring).
6) ASTs shall be equipped with overfill prevention (i.e. overfill alarm and/or overfill prevention valve).
7) Tanks and piping should be protected from vehicle impact via barriers, bollards, guard rails, etc.
8) Install ASTs on solid foundations over impervious surfaces, and away from areas of concentrated run-off, storm drains, and other stormwater conveyances.
9) Properly label all storage tanks (e.g., contents, capacity, etc.).
10) Keep remote fills and fill port spill buckets clean and dry.
11) Keep fill ports, gates, and tank areas secured when not in use to prevent fuel theft and tampering.
12) Have an adequate supply of appropriate spill response equipment readily available and clean up all spills and leaks immediately utilizing dry cleaning techniques (e.g. absorbents and brooms).
13) Facilities that maintain 1,320 gallons or more of aboveground oil products shall prepare and implement a Spill Prevention, Control, and Countermeasure (SPCC) Plan, per 40 CFR 112.
14) Facilities that maintain 1,000 gallons or more of used oil or 10,000 gallons or more of virgin oil in ASTs shall obtain an Individual Oil Operations Permit from the MDE, per COMAR 26.10.01.09.
15) Owners/Operators of facilities that maintain more than 2,500 gallons of oil in ASTs are required to register each AST with MDE, per COMAR 26.10.01.10.

Bulk Fluid Transfers (Deliveries)

1) All bulk fluid transfer operations shall be performed under the direct supervision of knowledgeable County personnel. At no time shall the delivery vehicle or delivery vehicle operator be unsupervised.
2) The product level within the tank must be measured and available capacity verified before delivery.
3) Deliveries shall be made via fill ports equipped with catch basins to capture drips and spills.
4) Ensure an adequate supply of appropriate spill response equipment is readily available.
5) Post signs in delivery area displaying proper delivery procedures and emergency contact information.

ABOVEGROUND STORAGE TANKS

Used Oil Tanks

1) County personnel must verify the level of product in used oil tanks prior to filling.
2) Used oil tanks should only be filled via designated fill ports. Pumping used oil into the tank via a closed piping system is preferred to manually pouring used oil into the tank.

Brine Tanks

1) If multiple tanks are located onsite, the tanks should be plumbed to ensure that the complete failure of one tank will not drain all the tanks in the system (tanks must be isolated).
2) Minimize seeping and leaking at fittings by properly supporting piping and fittings, using flexible connectors or hoses to reduce stress, and installing corrosion-resistant fittings.
3) Consider placing hoses in non-permeable trenches or using drip-less nozzles to reduce repeated small spills.

RESIDENT DROP-OFF CENTER

Not Applicable ☒ Applicable ☐

CONCERN

Resident Drop-Off Centers are publicly accessible facilities where residents can drop off used automotive fluids (i.e. oil or antifreeze), municipal waste, recyclable, and/or organic waste, typically free of charge. Improper transfer or management of the waste materials can allow a number of pollutants including oils and greases, toxic and chemical compounds, nutrients, metals, and other wastes to enter waterways.

POLLUTION PREVENTION MEASURES

General *(applicable to all materials collected)*

1) Clearly identify waste materials accepted by the facility, and clearly mark designated collection areas.
2) Waste material should be inspected by a County representative, prior to disposal.
3) Avoid positioning waste receptacles near storm drains, water bodies, or areas of concentrated runoff.
4) When practical, receiving areas should be covered.
5) Do not allow containers to overflow or waste materials to accumulate on the ground.

Automotive Fluid Collection

1) Used oil, antifreeze, and automotive fluid receiving areas should be on impervious surfaces, covered, and provided with secondary containment, which shall be maintained clean and dry.
2) Provide lidded waste receptacles in the receiving area for the public to dispose of empty containers. Waste receptacles shall be emptied routinely and waste disposed of properly.
3) Collection areas shall be inspected daily and all trash and spilled liquids appropriately cleaned up.
4) The available capacity of waste liquid collection containers shall be routinely verified and waste removals scheduled, as needed.
5) Install appropriate controls to prohibit the overfilling of waste fluid collection containers.
6) Place appropriate spill response equipment in close proximity to drop-off areas.
7) If aboveground tanks are used to collect waste fluids, refer to BMP Fact Sheet GHP-07 (Aboveground Storage Tanks) for additional recommendations.

Organic Debris Collection

1) Routinely transfer collected organic debris/waste to a composting or disposal facility.
2) Do not permit composting of organic waste except at properly designed and permitted facilities.
3) Enact controls to prevent leaves and other windblown debris from entering stormwater inlets.

Municipal Waste / Recyclables Collection

1) Refer to BMP Fact Sheet GHP-01 (Waste Management) for additional recommendations.

BMP Fact Sheet

STOCKPILES

GH-09

Not Applicable ☒ Applicable ☐

CONCERN

The County may stockpile various erodible materials, the type of material can vary depending on the needs of the County. Stockpiled material may include soil, sand, millings, slag, cinders, sawdust, landscaping bark, compost, etc. Exposed stockpiles can easily erode due to wind or precipitation and contribute suspended solids to stormwater runoff.

POLLUTION PREVENTION MEASURES

1) Maintain stockpiles of erodible materials within roofed storage buildings or covered storage bins, if feasible. If not, stockpile material on an impervious surface and cover the stockpile.
2) Temporary stockpiles should be placed on an impermeable membrane (tarp) for quick clean-up.
3) Locate stockpiles away from drain inlets, catch basins, swales, areas of concentrated stormwater flow, water bodies, and environmentally sensitive areas.
4) Divert stormwater flows away from/around the stockpiles using a diversion device (e.g., temporary swale, berm, sandbags, or diversion fence).
5) Cover temporary stockpiles of erodible materials with a tarp that has been adequately secured. The covers must be in place at all times when the stockpile is not in active use.
6) When accessing a portion of the stockpile, only remove a section of the cover to minimize exposure to the elements.
7) Use barriers to isolate stockpiled materials from high-traffic areas to prevent tracking of materials.
8) Sweep (do not wash or hose down) in front of material stockpile storage areas at regular intervals, following loading and unloading activities, and during times of heavy use.
9) If material is observed migrating from the stockpile, clean up all migrated material upon discovery and provide additional controls to reduce migration from the stockpile. If such measures are ineffective implement controls to capture pollutants before they migrate off-site (e.g. silt fencing, inlet filters, filter socks, at-grade inlet protection, etc.).
10) Minimize material stockpile inventory based on historical inventory/usage records and public safety operational needs.
11) Cold mix asphalt shall be stored on and covered with plastic sheeting or comparable material.
12) Routinely inspect outdoor material stockpiles to verify existing controls are functioning properly and for signs of erosion or material transport.

BMP Fact Sheet

DEICING MATERIALS

GH-10

Not Applicable ☒ Applicable ☐

CONCERN

When salt and other de-icing materials are stored outside and uncovered, they have a much higher risk of being eroded and transported offsite by stormwater. Improper de-icing material and sand storage may result in stormwater runoff containing elevated concentrations of sodium chloride and dissolved solids. Sodium chloride (e.g., road salt) is an effective deicer but can be highly corrosive to stormwater facilities. Smaller waterways are at a higher risk to increases in salinity, which can threaten aquatic species. Additionally, runoff containing sodium chloride has the potential to reach drinking water sources where small traces can adversely impact public health.

POLLUTION PREVENTION MEASURES

1) Bagged de-icing chemicals must be stored indoors. If stored outdoors bags must be kept on pallets (off the ground) and covered at all times. Bags must be intact without holes or openings.
2) Bulk de-icing materials shall be stored under cover and on an impervious surface.
3) Bulk salt storage areas/buildings shall not be overfilled so that salt spills out beyond the entrance of the storage area/building.
4) Bulk salt storage areas/buildings shall be maintained in a structurally sound condition and in a way that prevents the release of salt and the infiltration of stormwater. Deicing materials should not touch the sides of metal storage containers.
5) Barriers such as berms, gates, knee walls, tarps, and/or straw bales shall be placed at the entrances of bulk salt storage areas/buildings to prohibit the migration of salt and prevent contact with precipitation/stormwater runoff.
6) Routinely inspect storage areas for migrating materials or deterioration of containment structures. Sweep up all migrating materials upon discovery and repair the source of the migrating pollutant.
7) Loading areas should be constructed of impervious material and covered or enclosed, to the extent practical, to reduce potential contact with stormwater.
8) Minimize the distance de-icing materials are transported during loading/unloading activities.
9) Prevent and/or minimize the spillage of salt and de-icing materials during loading/unloading activities, immediately clean spilled or tracked materials.
10) Sweeping of storage and loading/unloading areas shall be conducted immediately following loading/unloading activities.
11) Do not store de-icing materials (bulk or bagged) over or immediately adjacent to drains or waterways.
12) Control site drainage by diverting stormwater run-on away from storage/loading areas using appropriate measures (e.g., curbing, berms, etc.).
13) Slope storage/loading areas to direct salt-contaminated runoff to an appropriate collection area, and in a manner that prevents the runoff from reaching adjacent soil or surface waters.
14) Excess salt shall be removed from salt handling equipment (trucks, spreaders, etc.) following use/prior to storage. All cleaning shall occur on an impervious surface, which is sloped or curbed to contain any washwater and direct it to a collection area for recycling or proper disposal.

Appendix A

GHP Site Inspection Checklist

GOOD HOUSEKEEPING PLAN (GHP)
SITE INSPECTION CHECKLIST

Facility Name: _____ **Inspection Date:** _____

Inspector Name: _____ **Inspector Signature:** _____

- The intent of this inspection is to ensure that the site is being properly maintained and that there are no visible signs of pollutants entering the stormwater system.
- **A shaded status box designates an item in a non-compliant status. Please provide an explanation for all non-compliant items and subsequently document all corrective actions performed.**
- Retain the completed checklists for five (5) years.

Item	Status			CORRECTIVE ACTIONS/COMMENTS *Items which cannot be corrected immediately must be reported to the GHP/NPDES Program Manager*
	Yes	No	N/A	
GENERAL HOUSEKEEPING				
1. Are exterior areas of the facility free of accumulated trash, debris, and unneeded materials?				
2. Are stormwater drains and inlets free from debris, sediment, and evidence of spills/releases?				
3. Is the facility free from signs of erosion?				
4. Are paved surfaces free of accumulated sediment?				
5. Is spill response equipment available in maintenance areas, fueling areas, hazardous material storage areas, and/or other required areas?				
6. Are spill kits and absorbent materials clearly labeled and accessible (i.e. items are not piled on top of or in front of spill kits)?				
7. Are spill kits secured from being stolen or misused?				
8. Is there a labeled container present for the disposal of used spill cleanup material?				

GOOD HOUSEKEEPING PLAN (GHP)
SITE INSPECTION CHECKLIST

Item	Status			CORRECTIVE ACTIONS/COMMENTS *Items which cannot be corrected immediately must be reported to the GHP/NPDES Program Manager*
	Yes	No	N/A	
9. Does spill response equipment (i.e. spill kits, absorbent materials) need to be replenished?				
WASTE MANAGEMENT				
10. Are areas around solid waste containers/roll-offs/compactors free of excessive trash accumulation or overflowing containers?				
11. Are areas around solid waste containers/roll-offs/compactors free of visible evidence (i.e. leaks, staining) of ongoing stormwater pollution?				
12. Are scrap metal containers in good order and free from evidence of leaking oil/grease?				
13. For dumpsters, roll-offs, and other waste receptacles, where leaks are observed, have appropriate controls (e.g. containment, spill response, etc.) been enacted?				
14. Are the lids (if present) to solid waste containers closed?				
15. Is street sweeping/vactor waste being managed appropriately (i.e. no evidence of material migration)?				
16. Is waste cooking grease managed appropriately (i.e. no evidence of spilled material or excessive staining)?				
VEHICLE & EQUIPMENT STORAGE				
17. Are stored vehicles/equipment free from leaks?				
18. If leaks are present, are they being managed appropriately (drip pan or other methods in place to capture released liquids)?				
19. Are storage areas free of visible evidence of chronic leaks/spills (i.e. significant staining)?				

GOOD HOUSEKEEPING PLAN (GHP)
SITE INSPECTION CHECKLIST

Item	Status			CORRECTIVE ACTIONS/COMMENTS *Items which cannot be corrected immediately must be reported to the GHP/NPDES Program Manager*
	Yes	No	N/A	
VEHICLE & EQUIPMENT REFUELING				
20. Are the areas around refueling areas free from evidence of spills or leaks?				
21. Are refueling areas free of used absorbent material that has not been swept/cleaned up?				
22. Do fuel dispensers and hoses appear to be in good working order and well-maintained?				
VEHICLE MAINTENANCE				
23. Is there any indication that vehicle maintenance activities are being conducted outdoors?				
24. Is there any indication that vehicle maintenance activities are contributing to stormwater pollution?				
VEHICLE & EQUIPMENT WASHING				
25. If performed on-site, does all vehicle/equipment washing occur indoors?				
26. Is wash water collected and disposed of properly?				
27. Is there any indication that vehicle/equipment wash water is being released to stormwater conveyances or pervious areas?				
MATERIAL STORAGE				
28. Are all outdoor storage areas free from visible signs of leaks or spilled material?				
29. Are material storage containers in good condition?				

GOOD HOUSEKEEPING PLAN (GHP)
SITE INSPECTION CHECKLIST

Item	Status			CORRECTIVE ACTIONS/COMMENTS *Items which cannot be corrected immediately must be reported to the GHP/NPDES Program Manager*
	Yes	No	N/A	
30. Are drums, totes, and other containers (that are <u>not</u> empty) stored off the ground and covered, or stored indoors?				
31. Are liquid-containing drums/totes located outdoors provided with secondary containment?				
32. Are containers that are located outdoors equipped with closed lids except when material transfers are occurring?				
33. Are materials, which could impact stormwater, stored away from heavy traffic areas, or protected from vehicle collisions?				
34. Are chemical storage containers properly labeled?				
35. If empty drums are stored outside, are all openings equipped with caps to prevent water intrusion?				
ABOVEGROUND STORAGE TANKS				
36. Are all storage tanks, and surrounding areas free from visible signs of leaks or spilled material?				
37. Do storage tanks appear to be in good working order (e.g. free of obvious signs of damage or malfunctioning equipment)?				
38. Are remote fills associated with tanks free of liquid and debris?				
RESIDENT DROP-OFF CENTERS				
39. Are waste collection areas clearly identified?				
40. Are used oil/antifreeze collection tanks, containment structures, and surrounding areas free from visible signs of leaks or spilled material?				

GOOD HOUSEKEEPING PLAN (GHP)
SITE INSPECTION CHECKLIST

Item	Status			CORRECTIVE ACTIONS/COMMENTS *Items which cannot be corrected immediately must be reported to the GHP/NPDES Program Manager*
	Yes	No	N/A	
41. Do used oil/antifreeze collection tanks appear to be in good working order (e.g. free of obvious signs of damage or malfunctioning equipment)?				
42. Are empty used oil/antifreeze containers being collected and disposed of in the trash?				
43. Are areas around waste/recyclables containers free of excessive trash accumulation or overflowing containers?				
44. Are areas around waste/recyclables containers free of visible evidence (i.e. leaks, staining) of ongoing stormwater pollution?				
45. Are organic debris collection areas free of visible evidence of ongoing stormwater pollution (e.g. leaves and debris in stormwater conveyances)?				
STOCKPILES				
46. Are material piles, including salt, soil, sand, and millings isolated (i.e. covered, bermed, etc.) to prevent stormwater run-on and run-off?				
47. Are areas surrounding material piles (e.g. salt, soil, sand, millings, etc.) free of tracked or migrated material?				
DEICING MATERIALS				
48. Are all deicing materials stored indoors or undercover?				
49. Are salt storage structures in good condition (e.g. no evidence of material escaping or stormwater infiltration)?				
50. Is the salt loading area clean?				

GOOD HOUSEKEEPING PLAN (GHP)
SITE INSPECTION CHECKLIST

Item	Status			CORRECTIVE ACTIONS/COMMENTS *Items which cannot be corrected immediately must be reported to the GHP/NPDES Program Manager*
	Yes	No	N/A	
51. If deicing materials are tarped, is the tarp secure and covering the entire pile?				
52. Are bags of salt stored indoors, or off the ground and covered?				

ADDITIONAL COMMENTS:

Appendix B

GHP Stormwater Conveyance System Inspection Checklist

GOOD HOUSEKEEPING PLAN (GHP)
STORMWATER CONVEYANCE SYSTEM INSPECTION CHECKLIST

Facility Name: _____ **Inspection Date:** _____

Inspector Name: _____ **Inspector Signature:** _____

- The intent of this inspection is to ensure the free flow of stormwater within on-site conveyance systems and prevent damage/flooding.
- **If maintenance is needed, please provide an explanation, and document all corrective actions performed.**
- **Inspections shall include visually accessible infrastructure only; at no time shall inspection personnel enter a confined space.**
- Retain the completed checklists for five (5) years.

Item	Item Checked (Y/N/NA)	Maintenance Needed (Y/N)	CORRECTIVE ACTIONS/COMMENTS *Items which cannot be corrected immediately must be reported to the GHP/NPDES Program Manager*
CATCH BASINS / INLETS			
1. Look for debris and sediment blocking catch basin grates. If found, remove.			
2. Look for damage or cracks to the frame, grate, basin walls or bottom. If found, schedule repairs or replacement.			
3. Look for sediment and debris in the catch basin sump. If sediment fills 60% of the sump or comes within 6” of a pipe it should be scheduled for cleaning.			
4. If any type of filtering device is present, verify that the filter is not clogged, torn, or damaged; clean if clogged, replace if damaged.			
PIPES / CULVERTS			
5. Look for evidence of clogged piping (e.g. visual obstructions, standing water within manholes/inlets structures, etc.). If found, remove or schedule cleaning.			
6. Verify vegetation growth, if present, does not impede water flow. If it does, mow, cut back, or remove.			

GOOD HOUSEKEEPING PLAN (GHP)

STORMWATER CONVEYANCE SYSTEM INSPECTION CHECKLIST

Item	Item Checked (Y/N/NA)	Maintenance Needed (Y/N)	CORRECTIVE ACTIONS/COMMENTS *Items which cannot be corrected immediately must be reported to the GHP/NPDES Program Manager*
7. Inspect for damaged piping, inlets, outlets, headwalls, wingwalls, or excessive erosion. If found, make or schedule repairs.			
DITCHES / TRAPEZOIDAL SWALES			
8. Check for erosion, slumping, or undercutting. If found, make or schedule repairs.			
9. Look for trash and sediment accumulation. Remove all trash and remove sediment if it will impede water flow or clog downstream structures.			
10. Verify vegetation growth does not impede water flow. If it does, mow, cut back, or remove. Remove any trees or shrubs growing within the ditch.			
11. Check the integrity of check dams, filter socks, or other flow dissipation/filtering devices within the ditch or swale. Perform or schedule service if they are clogged, damaged, or deteriorated.			
12. Check inlets and outlets for debris accumulation, damage, or erosion. If found, make or schedule repairs.			

ADDITIONAL COMMENTS:

GUIDANCE DOCUMENT
GOOD HOUSEKEEPING PLAN - STORMWATER CONVEYANCE INSPECTIONS

INTRODUCTION

Maintaining catch basins, stormwater inlets, and other stormwater conveyance structures on a regular basis will remove pollutants, prevent backups, and ensure the system functions as intended to avoid flooding.

Each GHP-covered facility is required to conduct routine stormwater conveyance system inspections to ensure the free flow of stormwater within the conveyance system(s). The GHP includes a *"GHP Stormwater Conveyance System Inspection Checklist"*, to be used when completing the required inspections. This document provides additional background and guidance to aid facility personnel in completing the inspections.

CATCH BASINS / INLETS

Catch basins and inlets are all points for stormwater to enter storm drain systems. These structures are typically part of a larger conveyance system with many interconnected components where the impairment of one component can compromise the functionality of the larger system. Inlets and catch basins are subject to functional impairment by a variety of conditions, including:

- Structural damage including from vehicles and plows
- Cracks/joint separation at piping (inlet and outlet) connections
- Leaking due to cracks and joint separation
- Missing or damaged grates and grate frames
- Corrosion
- Blockage caused by debris, sediment, vegetation, or other objects

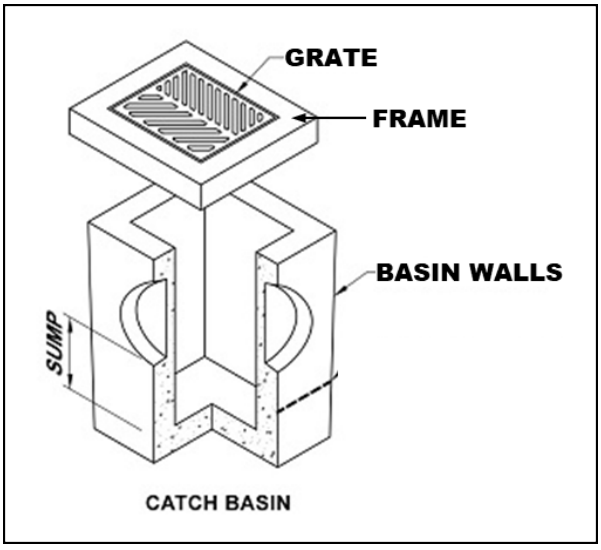

Figure 1 – Catch Basin Diagram

The following photos provide additional information related to the various inspection items, including examples of typical issues that may be encountered. The photo numbers correspond to the inspection checklist item number.

Inspection Item #1 [1]



Debris and sediment blocking inlet/catch basin grate.

Inspection Item #2 [2]



Damaged Grate

Inspection Item #2 [3]



Damaged Frame

Inspection Item #2 [4]



Failing brick walls with a stormwater inlet.

Inspection Item #2 [5]



Failing asphalt surrounding the inlet

[1] Grand Valley State University - https://www.gvsu.edu/groundswell/clogged-storm-drains-71.htm
[2] Georgia Department of Transportation – Stormwater System Inspection and Maintenance Manual, March 2020
[3] https://catchbasinauthority.ca/catch-basin-101/
[4] https://www.fixasphalt.com/catch-basin-repairs
[5] https://ccpia.org/catch-basin-and-manhole-inspections/

Inspection Item #3 [6]



Sediment and debris inside stormwater inlet

Inspection Item #3

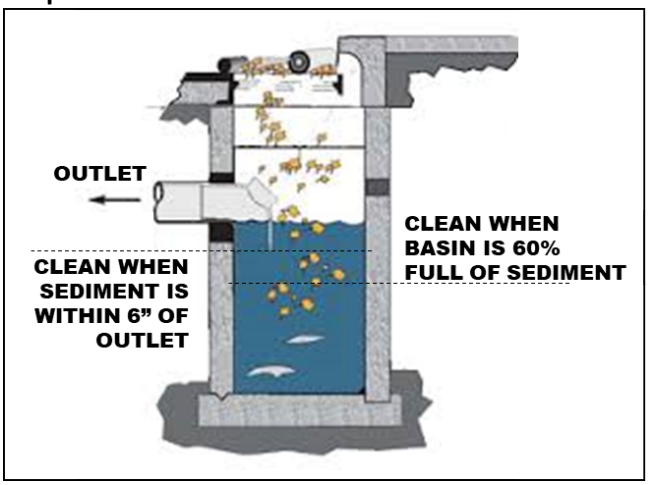

Remove sediment from a catch basin if it fills 60% of the sump or comes within 6" of a pipe.

Inspection Item #4 [7]



Example of inlet filter. Replace when filled or damaged. damaged.

Inspection Item #4 [8]



Example of an inlet filter sock, replace if

PIPES AND CULVERTS

Pipe systems are designed to convey stormwater runoff safely and effectively from inlets to various discharge points and outfalls. A culvert is a structure that channels water under an obstacle such as a roadway or railroad. These structures are subject to functional impairment by a variety of conditions, including:

- Blockage or obstruction due to build up of vegetation, debris, sediment, or other objects
- Cracks and/or joint separation
- Collapsed pipe
- Corrosion
- Root intrusion
- Lack of stabilization

[6] https://www.fixasphalt.com/catch-basin-repairs
[7] https://store.interstateproducts.com/products/Ultra-Drain-Guards/Ultra-Drain-Guard-Adjustable-Frame-Model
[8] https://www.newpig.com/pig-sediment-filter-sock/p/FLT787

Inspection Item #5 [9]



A pipe filled with sediment, inhibiting flow.

Inspection Item #5 [10]



Standing water around an inlet may indicate a blockage.

Inspection Item #6 [11]



Pipe conveyance filled with vegetation.

Inspection Item #7 [12]

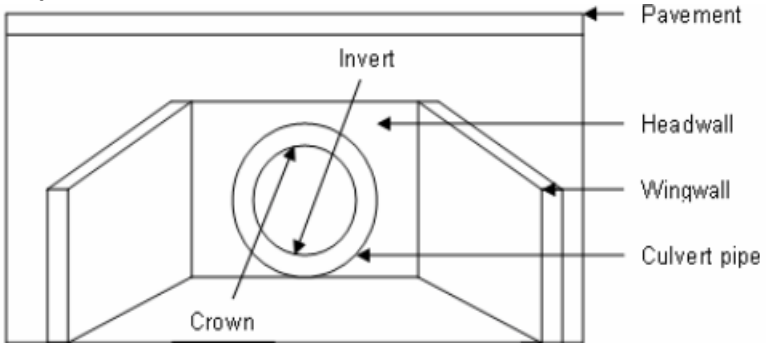

Diagram depicting various components of a culvert.

[9] Georgia Department of Transportation – Stormwater System Inspection and Maintenance Manual, March 2020
[10] https://www3.epa.gov/region9/water/npdes/stormwater-feature.html
[11] Georgia Department of Transportation – Stormwater System Inspection and Maintenance Manual, March 2020
[12] https://www.researchgate.net/figure/Components-of-a-Culvert_fig34_228685906

Inspection Item #7 [13]



A crack is the culvert headwall.

Inspection Item #7 [14]



Evidence of erosion around a culvert.

DITCHES AND SWALES

Ditches and swales serve similar functions. Both are used to convey stormwater. However, there are slight differences. A ditch is a narrow channel typically found along roads and at the edges of parking lots/driveways. A swale is like a ditch, but it is broad and shallow, and usually covered or lined with turfgrass or stone. Issues associated with these structures, which could impede their function include:

- Blockage or obstruction due to vegetation, debris, sediment, or other objects
- Erosion
- Rapidly moving water
- Lack of adequate vegetative cover for grass-lined channels

Inspection Item #8 [15]



Erosion and slumping within a drainage ditch.

Inspection Item #8 [16]



Slumping within a drainage swale.

[13] https://www.sbt-durabi.org/articles/xml/ARN0/
[14] https://lufkindailynews.com/news/local/culverts-crumbling-in-precinct-1/article_a9fed902-4379-5248-ab11-7471e2974298.html
[15] https://graniteseed.com/blog/how-to-stop-a-ditch-from-eroding/
[16] https://www.mnwcd.org/erosion-control

Inspection Item #9 [17]



Litter and debris within a ditch.

Inspection Item #9 [18]



Litter and debris within a swale.

Inspection Item #10 [19]



Cracks and joint separation in concrete channels, removal of vegetation may prevent future damage.

Inspection Item #11 [20]



Rock check dam across a channel.

Inspection Item #11 [21]



Filter sock check dams across a grass swale.

[17] https://craven.ces.ncsu.edu/2023/02/for-those-who-love-to-litter/
[18] https://www.cityoftulsa.org/government/departments/public-works/stormwater-quality/adopt-a-stream/
[19] Georgia Department of Transportation – Stormwater System Inspection and Maintenance Manual, March 2020
[20] EPA Stormwater Best Management Practice, Check Dams, December 2021
[21] EPA Stormwater Best Management Practice, Check Dams, December 2021

Inspection Item #12 [22]



Inlet to a rock-lined swale.

Inspection Item #12 [23]



Sediment accumulation at swale inlet.

END OF DOCUMENT

[22] https://www.stormwater.com/erosion-control/vegetation-management/article/13016118/inlet-protection-during-constructionand-after

[23] https://www.stormwater.com/erosion-control/vegetation-management/article/13016118/inlet-protection-during-constructionand-after

Appendix C

General Spill Response Procedures

SPILL RESPONSE AND NOTIFICATION PROCEDURES

A. Discovery of a Spill

1. Upon discovery of a spill, facility personnel should immediately assess the situation and determine if the spill is considered a "Minor" or "Major" spill. For a spill to be considered "Minor" all the following conditions must be satisfied:

    - ❖ The type of material spilled is known;
    - ❖ The spill is confined to the immediate work area;
    - ❖ The spill has not reached storm drains, sanitary sewer systems, open water, or surrounding soils;
    - ❖ The spill can be safely managed;
    - ❖ The employee can contain and clean up the spill with the PPE that is normally used in the work area;
    - ❖ The spill does not pose a serious threat of fire or an explosion; and
    - ❖ The spill does not pose conditions that are immediately dangerous to life or health.

2. If all the above conditions are met, the spill is considered "Minor". Refer to ***Section B*** of this document for appropriate response actions.

3. If all the above conditions are not met, then the spill is considered "Major". Refer to ***Section C*** of this document for appropriate response actions.

4. If a spill involves flammable liquids, ignitable vapors may be present - precautions must be taken to prevent ignition. Do not turn on or off equipment since sparks may be generated. Additionally, avoid the movement of equipment that could create static electricity. Larger spills of flammable liquids could pose a fire threat and would be considered a "Major" spill. Refer to ***Section C*** for appropriate actions.

B. Response to a "Minor" Spill

1. Identify the source of the spill and the direction in which the spill is heading.

2. Attempt to stop the spill at the source. Where applicable, the source of the spill shall be taken out of service until repairs can be made. If the spill is related to a fuel dispensing system, activate the Emergency Shut-Off (ESO) switch to prevent additional fuel disbursements.

3. If material is released outside a containment area, it is crucial that the material be contained as quickly as possible. Following proper safety procedures, use absorbent materials or diking to contain the spill. Prevent the spill from reaching storm drains, sanitary sewers, or open water. If a spill is flowing toward a drain, install temporary diking around the drain, block off the drain with a drain cover, or place absorbent material around the drain to prevent a discharge.

4. Once the spill has been stopped and contained, estimate the quantity of the spill. Consult applicable Safety Data Sheet (SDS) for material compatibility and environmental precautions. Note and follow recommendations regarding special precautions, spill response equipment, methods, or precautions. All cleanup work shall be conducted in accordance with existing safety protocols and SDS recommendations. Contact the facility Superintendent/Supervisor, or designee, for assistance if needed.

5. Recover or clean up the spilled material as much as possible. Material that cannot be reused must be discarded in accordance with state and federal regulations. Liquids absorbed by porous materials (e.g., wood, gravel, significant quantities of absorbent material, etc.) shall be placed into US DOT-approved 30-gallon or 55-gallon steel drums. Following cleanup, the container shall be secured and appropriately labeled to identify the contents and the date of the spill/cleanup. Containers shall be stored indoors and provided with secondary containment until transported off-site for disposal.

6. For spills that do not involve flammable liquids or other potential hazardous wastes, small quantities of used absorbent materials may be double bagged and disposed of along with municipal trash as long as all liquids have been absorbed (no free liquid may be present).

7. If the spilled material is a flammable liquid, corrosive liquid (pH ≤ 2 or ≥ 12.5), or other potential hazardous waste, all recovered product, impacted material, and used absorbent must be placed into a US DOT-approved containers/drums. Following cleanup, the container(s) shall be secured and appropriately labeled to identify the contents and the date of the spill/cleanup. Containers shall be stored indoors and provided with secondary containment until transported off-site for disposal. The facility Superintendent/ Supervisor, or designee shall be notified that a potential hazardous waste was released and that a waste characterization may be needed to facilitate proper disposal.

8. Surfaces that are contaminated by the spill shall be cleaned utilizing dry absorbent material. Tools and equipment that have been used in the cleanup must be decontaminated immediately after use. Decontamination water (if used) must be minimized, containerized, and disposed of properly.

9. If waste requires disposal, notify the facility Superintendent/Supervisor, or designee who will arrange for the proper characterization and disposal of any waste material. Representative sampling and analysis may be necessary to properly characterize the waste. The waste must be transported and disposed of in compliance with all applicable laws and regulations. Waste manifests, trip tickets, or bills of lading (if required) for waste disposal shall be kept on file.

10. Facility personnel shall restock/replace spill response equipment and absorbent materials used during the clean-up efforts.

11. The facility Superintendent/Supervisor, designee, or other appropriate County personnel shall be notified of the spill in accordance with ***Section D*** of this document.

C. Response to "Major" Spill

A "Major" spill is any discharge that does not meet the definition of a "Minor" spill. Any employee or contractor observing, being involved with, or recognizing a potential or actual spill of oil or other hazardous material, other than a "Minor" spill is responsible for performing the following actions:

1. If there is no danger to human health, attempt to stop and contain the spill at the source. If the spilled material is unknown, if PPE other than that which is typically used in your work area, is necessary to approach the spill area, or if assistance is required to stop the spill, do not attempt to contain the spill. If the spill is related to a fuel dispensing system, activate the Emergency Shut-Off (ESO) switch.

2. Most County employees lack the appropriate training to respond to "Major" spills. If the spill is of an unknown substance, is of a quantity that cannot be safely managed, or poses other risks beyond the training level of the employee, the employee should not attempt to contain or clean up the spill.

3. Evacuate individuals from the area and keep personnel away from the impacted area.

4. Immediately notify the facility Superintendent/Supervisor, or designee of the incident. The notified individual will determine the need for further evacuations and contact emergency response personnel (911), as necessary. *If a situation represents an immediate and grave danger to personnel, the public, structures, or other infrastructure, the individual discovering the incident may call 911 directly without first notifying facility management.*

5. The facility Superintendent/Supervisor or designee will determine if assistance from emergency response contractors is required to clean up the incident and will coordinate such spill response efforts with spill response contractors and other County agencies and first responders.

6. Facility personnel will provide assistance to emergency responders, as appropriate.

D. Reporting a Spill (Internal Notifications)

1. Once a spill is contained and cleanup operations have been initiated, the individual discovering the spill shall notify the appropriate County representatives and provide the following information:

    a) Identify the location, date, and time of the incident;
    b) Identify the type of material spilled or discharged;
    c) Estimate the quantity spilled and the rate of the spill;
    d) Identify the cause of the spill or discharge;
    e) Identify impacted media or infrastructure (soil, storm drains, open water bodies, etc.);
    f) Determine the extent of injuries involved; and
    g) Provide response measures implemented by the facility personnel.

E. Reporting a Spill (Regulatory Notifications)

State of Maryland Reporting Requirements (COMAR 26.10.01.05)

1. Upon discovery of a spill, the Responsible Person shall notify the MDE Emergency Response Division **within two (2) hours** by calling 866-633-4686. The caller shall be prepared to provide the following information:

    a) The time and date of the spill;
    b) The location and cause of the spill;
    c) The mode of transportation or type of facility involved;
    d) Type and quantity of oil spilled;
    e) Details regarding any assistance required;
    f) The name, address, and telephone number of the person making the report; and
    g) Any other pertinent information requested by the Department.

2. MDE will provide further guidance on additional responsibilities.

3. Within **ten (10) working days** of the completed removal and clean-up activities, the Responsible Person shall prepare a report using either County letterhead detailing the incident. The report shall contain the following:

    a) Date, time, and place of the spill;
    b) The amount and type of oil or hazardous substance spilled;
    c) A complete description of circumstances that contributed to the spill;
    d) A complete description of the containment and removal operations performed, including disposal sites to which oil refuse was transported;
    e) Procedures, methods, and precautions instituted to prevent the recurrence of an oil spill from the facility involved;
    f) Any other information considered necessary or required by the MDE for a complete description of the incident; and
    g) A certification that the information provided is true and correct to the knowledge of the person signing the report.

4. The completed report shall be submitted to mdeerd.mema@maryland.gov or faxed to 410-537-3932.

5. A digital copy of the completed report and any accompanying documentation shall be retained

Federal Reporting Requirements - National Response Center (40 CFR 110)

1. If any of the following criteria are met the Responsible Person shall notify the National Response Center (NRC) **within two (2) hours** of the spill discovery by calling 800-424-8802 or 202-426-2675.

    - ❖ The spill has caused a film, sheen, or discoloration of the surface water or shorelines;
    - ❖ The material spilled will violate applicable water quality standards (surface water or groundwater); or
    - ❖ The spill has caused a sludge or emulsion to be deposited beneath the surface of the water or on the shoreline.

2. At a minimum, the following information shall be provided to the NRC:

    a) Name, organization, and telephone number of reporting party;
    b) Name and address of the responsible party;
    c) Date, time, and location of the incident;
    d) Source and cause of the discharge;
    e) Type of material(s) discharged;
    f) Quantity of materials discharged;
    g) Danger or threat posed by discharge;
    h) Number and types of injuries (if any);
    i) Weather conditions at the incident location; and
    j) Other information to help emergency personnel respond to the incident.

3. If unable to report to the NRC, reports can be made to the EPA Regional Office at 800-438-2474 or the U.S. Coast Guard (USCG) at 202-372-1001. The NRC, EPA, or USCG will provide further guidance.

4. A digital record of the NRC notification and any accompanying documentation shall be retained on-site.

Federal Reporting Requirements - EPA Regional Administrator (40 CFR 112.4)

1. If the facility where the spill occurred is regulated under 40 CFR 112 and is required to have a Spill Prevention, Control, and Countermeasures (SPCC) Plan, the Responsible Person shall report the spill to the EPA Region III Administrator when any of the following criteria are met:

   - ❖ More than 1,000 gallons of oil is discharged to navigable waters or adjoining shorelines in a single incident; or
   - ❖ More than 42 gallons of oil is discharged to navigable waters or adjoining shorelines in each of two incidents occurring within any twelve-month period.

2. The report shall be made in writing **within 60 days** of the spill and shall contain:

   a) Name and location of the facility;
   b) Owner/operator name;
   c) Maximum storage/handling capacity of the facility and normal daily throughput;
   d) Corrective actions and countermeasures taken;
   e) Adequate description of the facility including maps, and flow diagrams;
   f) Cause of the discharge to navigable waters, including a failure analysis;
   g) Additional preventative measures taken or planned to minimize discharge reoccurrence; and
   h) Other information required by the EPA Regional III Administrator.

3. The report shall be submitted to the EPA Regional Administrator at the following address:

   EPA Regional Administrator
   US EPA Region 3
   1650 Arch Street (3RA00)
   Philadelphia, PA 19103-2029

4. A copy of the report shall be retained in the facility SPCC Plan.

Appendix D

Training Records

GOOD HOUSEKEEPING PLAN (GHP)
TRAINING ATTENDANCE LOG

FACILITY NAME: _____

DATE	NAME *(PRINT)*	SIGNATURE

By signing I affirm that I have completed the required annual training; and I am aware of and understand my responsibilities under this Plan.

GOOD HOUSEKEEPING PLAN (GHP)

Deerfield Elementary School
2307 Willoughby Beach Road
Edgewood, MD 21040

June 30, 2025

TABLE OF CONTENTS

1.0 BACKGROUND & INTRODUCTION 1
1.1 Objectives 1
1.2 Potential Stormwater Pollutants 1
2.0 RESPONSIBILITIES 3
2.1 GHP Implementation 3
2.2 Plan Review and Modification 3
2.3 Inspections 3
2.3.1 GHP Site Inspections 3
2.3.2 Conveyance System Inspections 4
2.4 Training 4
3.0 BEST MANAGEMENT PRACTICES (BMPs) 5
3.1 Applicability of BMP Fact Sheets 5
3.2 BMP Fact Sheets 5

List of Tables

TABLE 1-1 POTENTIAL STORMWATER POLLUTANTS AND THEIR SOURCES 2

List of BMP Fact Sheets

GH-01 - Waste Management
GH-02 - Vehicle and Equipment Storage
GH-03 - Vehicle/Equipment Refueling
GH-04 - Vehicle Maintenance
GH-05 - Vehicle/Equipment Washing
GH-06 - Material Storage
GH-07 - Aboveground Storage Tanks
GH-08 - Resident Drop-Off Centers
GH-09 - Stockpiles
GH-10 - Deicing Materials

Appendices

Appendix A: GHP Site Inspection Checklist
Appendix B: GHP Stormwater Conveyance Inspection Checklist
Appendix C: General Spill Response Procedures
Appendix D: Training Records

List of Acronyms

AST	-	Aboveground Storage Tank
BMP	-	Best Management Practice
CFR	-	Code of Federal Regulations
GHP	-	Good Housekeeping Plan
MDE	-	Maryland Department of the Environment
MS4	-	Municipal Separate Storm Sewer System
NPDES	-	National Pollutant Discharge Elimination System
SPCC	-	Spill Prevention, Control, and Countermeasure Plan

1.0 BACKGROUND & INTRODUCTION

Polluted stormwater runoff has the potential to enter the County's storm sewer systems (referred to as a municipal separate storm sewer system or MS4), and then discharge, untreated, into local water bodies. To address this potential stormwater pollution, the County is required to obtain a NPDES permit from the Maryland Department of the Environment (MDE). The NPDES Permit requires the County to take actions to prevent stormwater pollution, maintain storm sewer systems, monitor stormwater discharges, and develop and implement comprehensive management programs to minimize the discharge of pollutants from the storm sewer system.

To comply with Part IV.D.4.b of the County's Phase I MS4 Permit, the County must develop, implement, and maintain a Good Housekeeping Plan (GHP) for certain County-owned properties not required to be covered under Maryland's General Permit for Discharges from Stormwater Associated with Industrial Activities *(General Permit 12-SWA / 20-SW).*

To support this effort, a *"Good Housekeeping Plan Applicability Certification"* has been developed to evaluate and document if a specific County-owned facility is subject to the GHP requirements. The *"GHP Applicability Certification"* includes the following ten (10) potential stormwater polluting activities. If any of the covered activities are performed at the facility, then that facility is required to implement a site-specific GHP. The GHP will include each of the potential stormwater polluting activities identified in the *"GHP Applicability Certification"* and corresponding pollution prevention procedures.

- Waste Management
- Vehicle and Equipment Storage
- Vehicle/Equipment Refueling
- Vehicle Maintenance
- Vehicle/Equipment Washing
- Material Storage
- Aboveground Storage Tanks
- Resident Drop-Off Center
- Stockpiles
- Deicing Materials

1.1 Objectives

The GHP was developed to outline suitable practices, procedures, and protocols, or Best Management Practices ("BMPs") for reducing and/or preventing stormwater pollution associated with operations at covered County-owned properties. The intent of the pollution prevention procedures included in the GHP is to limit the release of materials with the potential to impact stormwater, this includes reducing or eliminating (to the extent practical):

- The occurrence of spills and leaks;
- The accidental dumping or release of materials;
- The accumulation of waste, trash, debris, unused parts/equipment, etc.;
- The exposure of hazardous materials to precipitation/run-off;
- Stormwater run-off contamination by improperly stored materials; and/or
- Illicit discharges to the storm drain system.

1.2 Potential Stormwater Pollutants

Table 1-1 on the following page provides a list of common potential pollutants that may result from the GHP-regulated activities identified above. Understanding the sources of these pollutants can help in achieving the goals and objectives of the GHP program.

TABLE 1-1 POTENTIAL STORMWATER POLLUTANTS AND THEIR SOURCES

		Waste Management	Vehicle/Equipment Storage	Vehicle/Equipment Refueling	Vehicle Maintenance	Vehicle/Equipment Washing	Material Storage	Aboveground Storage Tanks	Resident Drop-Off Center	Stockpiles	Deicing Materials
Pollutants	**Sources**	**Associated GHP Activity**									
Sediment	Land disturbance; erosion; paved surfaces; material stockpiles; waste storage; salt/abrasive application	X				X	X		X	X	X
Hydrocarbons *(petroleum compounds)*	Leaking vehicle and equipment; vehicle and equipment cleaning; spills; improper storage; maintenance activities; scrap metal disposal; improper disposal	X	X	X	X	X	X	X	X		
Metals	Vehicle brake and tire wear; vehicle/equipment exhaust; batteries; galvanized metal; paint and wood preservatives; fuels, pesticides, and cleaners; vehicle fueling, maintenance, and washing; industrial waste	X	X	X	X	X	X	X	X		
Toxic Chemicals	Pesticide application; improper chemical storage; leaks and spills from storage containers; leaking vehicles; maintenance activities	X	X		X	X	X	X	X		
Chlorides	De-Icing chemicals										X
Trash/Debris	Improper waste storage and disposal; leaking trash containers; littering; poor housekeeping	X	X				X		X		
Nutrients (nitrogen and Phosphorus)	Fertilizers; malfunctioning septic systems; sewer overflows; animal/pet waste; vehicle washing; decaying grass and leaves; leaking trash containers; atmospheric deposition	X				X	X		X		

2.0 RESPONSIBILITIES

2.1 GHP Implementation

A separate GHP is required for each covered facility. The following individual *(identified by name and/or title)* is accountable for the administration and implementation of the GHP at this facility and has the authority to commit the necessary resources to implement this Plan.

_____

Name and/or Title of Responsible Person

The Responsible Person listed above shall ensure that facility personnel involved in any GHP-covered activities identified in this Plan, are provided with access to, and are familiar with, the contents of this Plan.

2.2 Plan Review and Modification

The *"GHP Applicability Certification"* completed for this facility must be reviewed and updated once every permit term, or within one (1) year of substantial changes to a facility's operations that could reasonably contribute to stormwater pollution. Any newly constructed/acquired facility must be assessed within one (1) year of initiating operations at the facility. The facility's GHP must be amended and reissued to the facility within one (1) year of any changes to the facility's *"GHP Applicability Certification"*.

When warranted, the BMP Fact Sheets provided in Section 3.0 may need to be updated or revised. At the same time, additional BMP Facts Sheets may be added. The need for such updates or modifications will be at the discretion of the County's GHP Program Administrator.

2.3 Inspections

The County's MS4 permit requires each facility covered by a GHP to have the following:

1. Written procedures for annually assessing County properties to prevent the discharge of pollutants, spills, and leaks into the County's storm sewer system; and

2. Written procedure for performing stormwater conveyance system inspections and for removing debris that may cause clogging, backups, and flooding.

To meet these requirements, each facility that is covered by a GHP will be required to complete routine site inspections and stormwater conveyance system inspections as detailed below. Facility management will be responsible for ensuring the necessary inspections are completed within the required timeframes, that corrective actions (if needed) are performed, and that records of inspections and completed corrective actions are maintained for at least five (5) years.

2.3.1 GHP Site Inspections

The GHP Site Inspection will be performed to ensure that each GHP-covered facility is being properly maintained and that there are no visible signs of pollutants entering the stormwater system. GHP facilities shall utilize the *"GHP Site Inspection Checklist"*, provided in ***Appendix A*** to complete the required inspection. At a minimum, each facility is to be inspected every five (5) years.

2.3.2 Conveyance System Inspections

Stormwater conveyance systems are generally comprised of curbs and gutters, catch basins, inlet structures, swales, channels, piping, culverts, detention ponds, outfalls, or other structures that are used to collect, contain, and convey stormwater runoff.

The unimpeded movement of stormwater through conveyance systems is critical in avoiding backups and flooding, which can impede facility operations and damage property. Routine inspections and preventative care of stormwater conveyance systems can ensure these systems function as intended and prevent the need for costly and time-consuming repairs and retrofits.

Each GHP-covered facility is required to conduct routine stormwater conveyance system inspections to ensure the free flow of stormwater within the conveyance systems. GHP-covered facilities shall utilize the *"GHP Stormwater Conveyance System Inspection Checklist"*, provided in ***Appendix B*** to complete the required inspections. At a minimum, facility conveyance system inspections are to be conducted every five (5) years.

2.4 Training

As part of the GHP requirements within the County's Phase I NPDES permit, annual training must be provided to all appropriate staff and contractors. Such training shall be provided to any individuals responsible for implementing the GHP, performing the required inspections, or involved in any of the GHP-covered activities identified in this Plan. The required training shall focus on the duties and responsibilities assigned to site personnel in implementing the GHP and the best management practices (BMPs) prescribed in this Plan for preventing, reducing, and eliminating the discharge of pollutants during facility activities.

The County's MS4/GHP Program Coordinator will be responsible for developing the required training and disseminating it to GHP-covered facilities. Each GHP-covered facility will be responsible for identifying staff/contractors who must attend annual training, ensuring identified staff complete the required training, and maintaining records that document training dates and attendees. Training records and other documentation shall be maintained in ***Appendix D*** of this Plan.

3.0 BEST MANAGEMENT PRACTICES (BMPs)

This section contains a BMP Fact Sheet for each of the ten (10) GHP-regulated activities. The County's operations are not limited to the BMPs contained within this document; nor is the County required to implement all of the pollution prevention measures identified within each BMP Fact Sheet. The County should select and implement those measures that are applicable and have the greatest potential for reducing stormwater pollution.

The BMP Fact Sheets contained within this document offer recommended protocols for a particular activity. These pollution prevention measures are considered non-structural BMPs with a focus on source control of potential pollutants.

3.1 Applicability of BMP Fact Sheets

The *"GHP Applicability Certification"* completed for this facility has identified the activities conducted at this facility that require coverage under this Plan. Each of the BMP Fact Sheets shall be marked as to whether they are applicable or not applicable to this facility. The Applicable/Not Applicable indicator on each BMP Fact Sheet can be revised in response to changes in operations at the facility.

3.2 BMP Fact Sheets

BMP Fact Sheets can be found on the following pages. For the sake of consistency, the general outline of a BMP Fact Sheet will be as follows:

- Identification of GHP-covered activity.
- Applicability of the BMP Fact Sheet to the facility.
- A general description of the concern the activity poses to stormwater.
- Recommended pollution prevention measures for reducing/eliminating stormwater pollution.
- Additional sources of information, if applicable.

BMP Fact Sheet

WASTE MANAGEMENT

GH-01

Not Applicable ☒ Applicable ☐

CONCERN

Improperly managed waste can allow trash and debris to be washed into storm drains which poses a concern to water quality, marine life, and public health. It also has the potential to create obstructions in the drainage system, which can lead to backups and flooding. Additionally, improper storage and handling of waste materials can allow pollutants including oils and greases, toxic and chemical compounds (including nutrients), bacteria, metals, and other potentially hazardous wastes to enter waterways.

POLLUTION PREVENTION MEASURES

General *(applicable to all waste management activities)*

1) Provide suitable containers, preferably with working covers, to collect waste materials.
2) Ensure that appropriate waste containers are available in areas where waste is generated.
3) Provide a cover over waste storage areas, if feasible.
4) Avoid positioning waste receptacles near storm drains, water bodies, or areas of concentrated runoff.
5) Ensure that lids to waste containers *(if present)* are kept closed to prevent the intrusion of precipitation and prevent trash from blowing out of the receptacle.
6) For waste receptacles, which do not have lids and could leak, containers should be inspected regularly and controls (e.g., containment, spill response, etc.) shall be enacted whenever leaks or dry-weather discharges are observed.
7) Routinely inspect waste containers, roll-offs, compactors, and other waste receptacles for the presence of excessive waste accumulation and overflowing containers.
8) Ensure that wastes accumulating on the ground are placed in a suitable waste container.
9) Ensure that wastes are removed from the facility regularly by a licensed and contracted vendor.
10) Repair or replace damaged waste container lids.

Trash Compactors

1) Routinely inspect trash compactors for malfunctioning equipment or leaking hydraulic oil and provide the appropriate spill response if leaking equipment is encountered.
2) Regularly inspect compactors for leaking fluids and implement appropriate controls such as spill response/cleanup, collection or diversion of released fluids, providing secondary containment, etc. whenever leaks or dry-weather discharges are observed.

Scrap Metal Collection Containers

1) Avoid placing oily or grease-covered items in uncovered scrap metal recycling collection containers. If needed, wrap oily/greasy items in plastic garbage bags before placing them in the collection container.

Hazardous/Universal Wastes

1) Ensure that hazardous waste and universal wastes (e.g., batteries, bulbs, etc.) are collected and stored indoors or within covered collection containers.
2) Verify that hazardous/universal waste collection containers are in good condition, not leaking, and compatible with the wastes being stored.

Street Sweeping / Vactor Truck Material Storage

1) Do not site storage areas near storm drains, open water bodies, or areas of concentrated runoff.
2) Install sediment control devices (e.g. silt fence, silt socks, hay bales, etc.) around the staging area. Inspect these controls regularly and replace them as needed.
3) Cover the materials staging area, if feasible.
4) Provide oil-absorbent booms if necessary to control oily discharge. Inspect and replace booms regularly.
5) The staging area should be checked periodically for evidence of sediment migrating outside of the staging area. Material that has migrated out of the staging area should be promptly swept and returned to the staging area or disposed of.

Waste Cooking Oil/Grease

1) Maintain storage containers indoors or within a covered location, if feasible.
2) Storage containers shall be secured to prevent infiltration of precipitation and accidental/intentional spills or releases.
3) Carefully transfer waste oil/grease to the appropriate collection container to avoid spills.
4) Maintain suitable spill response equipment near collection containers. Immediately clean up any spilled oil/grease. Keep the exterior of the collection container clean and free of spilled oil/grease.
5) Provide secondary containment for collection containers, if feasible.

BMP Fact Sheet

VEHICLE AND EQUIPMENT STORAGE

GH-02

Not Applicable ☒ Applicable ☐

CONCERN

Vehicles and equipment may be stored onsite to support various County operations (e.g., construction, maintenance, snow removal, roadside assistance, mass transit, mowing, etc.). Examples of County owned and operated vehicles and equipment stored onsite at any given time include but are not limited to, the following: cars, trucks, buses, emergency response vehicles, garbage trucks, heavy equipment (backhoes, frontend loaders, etc.), forklifts, towable generators, portable light stands, and roadside equipment. Vehicle and equipment storage is considered a pollutant source due to the potential for incidental releases of petroleum products, lubricants, and various automotive fluids.

POLLUTION PREVENTION MEASURES

1) When possible/practical, store vehicles and equipment inside or under cover to prevent exposure to precipitation.
2) If vehicles or equipment must be stored outside, store vehicles/equipment in designated areas away from areas of concentrated runoff, storm drains, and other stormwater conveyances.
3) Vehicles and equipment shall be staged on impervious (asphalt or concrete) surfaces;
4) Keep truck beds clean and ensure potential stormwater pollutants are stored in closed containers, covered, or otherwise protected from stormwater exposure.
5) Conduct routine visual inspections of vehicles and equipment for the presence of leaks and respond accordingly.
6) Leaking vehicles/equipment should be moved inside or under cover. At a minimum, drip pans or absorbent pads shall be used to contain the leak until the vehicle/equipment can be relocated and the leak addressed.
7) Drain all fluids from wrecked or heavily damaged vehicles and equipment before storage.
8) Have an adequate supply of appropriate spill response equipment readily available and clean up all spills and leaks immediately utilizing dry cleaning techniques (e.g. absorbents and brooms).
9) Train staff in spill response so that incidents are addressed in a timely fashion.
10) Do not wash down areas where leaks have collected on ground surfaces; use dry cleaning methods such as granular absorbents and brooms.

VEHICLE AND EQUIPMENT REFUELING

Not Applicable ☒ Applicable ☐

CONCERN

Refueling activities associated with County vehicles and equipment can result in a discharge of fuel (gasoline and diesel fuel), which has the potential to enter the storm drain system and/or a nearby waterway. Such releases can introduce hydrocarbons, metals, and other toxic chemicals to stormwater runoff.

POLLUTION PREVENTION MEASURES

General Procedures *(applicable to all refueling activities)*

1) Routinely *(at least daily)* inspect the fuel dispensing area for any spills or leaks.
2) Routinely inspect fuel dispensing equipment looking for leaking or damaged equipment. Damaged or malfunctioning equipment shall be taken out of service until it has been repaired.
3) Fuels will only be dispensed into authorized vehicles, equipment, and approved containers.
4) Vehicle operators must remain outside of their vehicles and in attendance of fuel dispensers at all times while dispensing fuel.
5) Third-party contractors must be trained in proper refueling procedures and pollution prevention.
6) Do not utilize a foreign object to keep the dispenser nozzle in the open position. If present, a "hold-open" latch on the nozzle may be used.
7) Do not "top off" a vehicle's fuel tank once the dispenser nozzle's automatic shut-off has been activated. Topping off tanks may result in spills. Post signs in fueling areas warning vehicle operators against "topping off" of vehicle fuel tanks.
8) After refueling has stopped, allow several seconds to pass before removing the nozzle and returning it to the dispenser. This will prevent incidental dripping from the nozzle.
9) Employees refueling vehicles shall note the location of the "Emergency Fuel Shut Off" switch, to be used to stop the flow of fuel to the dispensers in the event of a release or emergency.
10) Have an adequate supply of appropriate spill response equipment readily available and clean up all spills immediately utilizing dry cleaning techniques (e.g. absorbents and brooms).
11) Immediately clean up and dispose of used absorbent material.
12) Do not wash down fueling areas; use dry cleaning methods such as granular absorbents and brooms.
13) Conduct refueling activities over impervious (e.g. concrete) surfaces. Place drip pans or absorbent pads under the nozzle if fueling occurs over a permeable surface such as grass or soil.
14) Install oil control devices in storm drains that may receive contaminated runoff from fueling areas.
15) Cover fueling areas with a canopy or roof to prevent direct contact with rainfall. Direct run-on away from fueling areas and collect fueling area run-off in a dead-end sump or oil-water separator.

Mobile Equipment Refueling

1) Refuel equipment on an impervious surface, downgradient of, and at the farthest practical distance from any storm drain, stormwater conveyance, stormwater management feature, or waterway.
2) Utilize secondary containment when refueling equipment (when practical).
3) Ensure mobile refuelers are parked in designated locations and away from areas of concentrated run-off, storm drains, and other stormwater conveyances.
4) Ensure that procedures are in place and that staff is properly trained in spill response/cleanup so that leaks and spills are addressed appropriately and promptly.

BMP Fact Sheet

VEHICLE MAINTENANCE

GH-04

Not Applicable ☒ Applicable ☐

CONCERN

Vehicle and equipment maintenance can impact the water quality of nearby waterways by exposing stormwater to various pollutants including petroleum hydrocarbons, solvents, antifreeze/coolants, used oil, lubricating oil, grease, brake fluid, metals, and various chemicals. Additionally, vehicles that are wrecked or awaiting repair can be a source of pollution if leaking fluids are not properly controlled.

POLLUTION PREVENTION MEASURES

1) Conduct vehicle and equipment maintenance activities indoors.
2) Make sure incoming vehicles and equipment are inspected for leaking fluids and oil.
3) Move leaking vehicles or equipment indoors or under cover as soon as possible. At a minimum, a drip pan or absorbent pads shall be utilized to contain the leak until the vehicle/equipment can be relocated and the leak addressed.
4) Avoid performing maintenance on vehicles in close proximity to exterior doorways, which may allow released fluids to migrate outdoors.
5) Have an adequate supply of appropriate spill response equipment readily available and clean up all spills and leaks immediately utilizing dry cleaning techniques (e.g. absorbents and brooms).
6) Keep maintenance areas neat and well organized. Remove dirt, debris, and used absorbent regularly.
7) Inspect maintenance areas as well as maintenance equipment on a routine basis.
8) Store vehicles, parts, and generated wastes indoors or off the ground and under cover whenever possible. When practical, provide secondary containment.
9) Promptly transfer used fluids to the proper waste container; do not leave full drip pans or other open containers around the shop. Empty and clean drip pans and containers regularly.
10) Waste liquids shall not be poured into floor drains, sinks, outdoor storm drain inlets, or other storm drains or sewer connections. Liquid wastes are to be collected in properly labeled containers and disposed of by a licensed waste hauler or other appropriate method.
11) Store leaking batteries in a sealed container and provide secondary containment, if feasible.
12) Clean all parts indoors utilizing a self-contained parts washer.
13) Do not hose down indoor service areas to storm drains or areas where it can seep into groundwater.
14) Maintain floor drains in good working order and inspect for proper function on a routine basis. Consider plugging floor drains that discharge to the storm sewer.
15) Ensure oil/water separators (if present) are maintained in proper working order and are checked on a routine basis for the presence of oil.
16) If maintenance work must be performed outdoors, adhere to the following requirements:
    - Conduct maintenance activities over an impervious surface, away from stormwater inlets.
    - Cover outdoor maintenance areas and direct stormwater run-on away from the area.
    - Use drip pans or drop cloths underneath the equipment to catch leaks and drips.
    - Have an adequate supply of appropriate spill response equipment readily available.
    - Clean all spills immediately using dry cleaning techniques (e.g. absorbents and brooms).
    - Avoid performing maintenance activities during precipitation events.
    - Limit temporary outdoor maintenance activities to a single shift/day if additional time is needed to cover the work area at the end of each day/shift.

VEHICLE AND EQUIPMENT WASHING

Not Applicable ☒ Applicable ☐

CONCERN

Vehicle and equipment washing can generate washwater that contains oil, grease, organic compounds, surfactants, phosphates, metals, and suspended solids. If vehicles/equipment are washed outdoors on impervious surfaces, dirty washwater can contaminate stormwater that ends up in waterways. Washing equipment over pervious surfaces can allow washwater to seep into the ground contaminating groundwater.

POLLUTION PREVENTION MEASURES

1) Vehicle and equipment washing should only be conducted in designated indoor wash bays that capture and recycle washwater to the extent practical.
2) Wastewater from the washing facility should be discharged to the sanitary sewer system under the authorization of a wastewater discharge permit issued by the local municipal authority.
3) The floor of indoor vehicle wash bays should be completely bermed or sloped to collect wash water and prevent migration outdoors.
4) No other activities (e.g., fluid changes, repairs, material storage) shall be performed in wash areas.
5) Keep the wash bay neat and well organized. Sweep or pick up all trash and debris daily or as needed.
6) Solid materials accumulated on vehicles or in vehicle beds (e.g. salt, soil, grass, etc.) shall be knocked off or otherwise removed from the vehicle (while inside the wash bay) prior to washing. Solid materials shall be collected and disposed of properly.
7) For vehicles too large to completely fit in the wash bays, only the portion of the vehicle physically located in the confines of the wash bay shall be cleaned. The vehicle shall then be rotated to allow for the remaining portion of the vehicle to be washed.
8) Use nozzles that automatically turn off water when not in use and consider high-pressure, low-volume sprays.
9) Avoid detergents as much as possible. If detergents are necessary, use a biodegradable, phosphate-free detergent.
10) If discharging to an oil-water separator, use a non-emulsifying detergent.
11) Inspect floor drain systems, holding tanks, and conveyances associated with designated wash areas regularly. Maintain oil/water separators and/or process flowthrough separators on a routine basis.
12) Use commercial car washes when vehicle or equipment washing cannot be performed onsite without causing impacts to stormwater.
13) If washing must occur onsite and outdoors, use a designated impervious area that is marked with posted signs indicating proper washing procedures. This area must be bermed to contain the wash water and graded to direct the wash water to the sanitary sewer, an oil-water separator, a holding tank, a dead-end sump, or other containment area. Captured water shall be disposed of properly.
14) Avoid steam cleaning and engine/undercarriage washing which can produce high pollutant concentrations. If steam cleaning or engine washing is necessary, perform such cleanings within isolated indoor areas, and ensure wash water is treated and discharged to the sanitary sewer (if permitted to do so) or captured for off-site disposal.
15) Train staff in proper washing techniques and how to confine washing to designated wash areas.
16) Consider alternatives to washing such as using air to blow grass and debris from small equipment, wet-wiping equipment with rags, etc.

BMP Fact Sheet

MATERIAL STORAGE

GH-06

Not Applicable ☒ Applicable ☐

CONCERN

The storage of petroleum products, chemicals, paints, cleaners, pesticides, fertilizers, bags of erodible materials like sand, cement, and soil, and other potential pollutants can negatively impact surface waters through the accidental releases or leaching of materials into stormwater. Unprotected outdoor storage areas can generate a wide range of stormwater pollutants, such as sediment, nutrients, toxic materials, and petroleum products.

POLLUTION PREVENTION MEASURES

1) Whenever possible, store containers (e.g. drums, bins, bags, cans, and totes) indoors or under cover to limit exposure to stormwater.
2) Designate specific areas for material delivery and storage that are away from heavy traffic areas, storm drains, stormwater conveyances, and areas of concentrated run-off.
3) Designated outdoor storage areas should be paved or consist of an impervious surface.
4) Provide secondary containment for materials whenever possible or required per regulation.
5) Store materials on pallets to prevent stormwater run-on from coming into contact with materials, prevent container corrosion, and allow for better leak detection. Pallets must be in good condition and promptly replaced once damaged or deteriorated.
6) Stack containers according to the manufacturer's recommendations to avoid damage.
7) Immediately replace damaged, corroded, or leaking containers.
8) Ensure all storage containers are clearly labeled with their contents.
9) Keep containers tightly sealed after use.
10) Maintain an accurate inventory of hazardous substances and limit on-site storage to that which is necessary to support facility operations.
11) Keep storage areas neat and well organized; remove debris and unneeded material promptly.
12) If empty drums are stored outdoors, ensure that all openings are equipped with caps to prevent water intrusion and that the drum/storage area is labeled "Empty Drums".
13) Have an adequate supply of appropriate spill response equipment readily available and clean up all spills and releases immediately utilizing dry cleaning techniques (e.g. sweeping/absorbents).
14) Clean up all migrating dry materials upon discovery and address the source of the release.
15) Provide perimeter controls (e.g., berms, rock check dams, etc.) for erodible stockpiles of materials such as mulch, sand, and gravel to prevent migration into the stormwater system.
16) Routinely inspect material storage areas for leaks, material migration, and damaged or corroded containers. Ensure that secondary containment and other perimeter controls are in satisfactory condition.
17) Additional visual inspections of outdoor storage areas should be conducted after significant rainfall events (i.e., greater than 0.5 inches).

BMP Fact Sheet

ABOVEGROUND STORAGE TANKS

GH-07

Not Applicable ☐ Applicable ☒

CONCERN

Aboveground storage tanks (ASTs) may be used to store fuels, automotive fluids, chemicals, or deicing fluids. Leaks from tanks, piping, or other equipment and releases during fluid transfers can all impact stormwater quality. It is critical to maintain ASTs in good working condition to prevent spills and/or releases from occurring. Improperly managed storage tanks can cause significant environmental impacts.

POLLUTION PREVENTION MEASURES

General *(applicable to all storage tanks)*

1) ASTs should be installed and maintained in accordance with COMAR 26.10 and applicable fire codes.
2) ASTs should be provided with secondary containment, whenever feasible or required by regulation.
3) Secondary containment areas shall be maintained clean and dry; drain valves must be kept closed; accumulated liquid shall only be discharged if there are no visible signs of impacts, and in accordance with applicable regulations.
4) Inspect ASTs monthly to identify any leaking or malfunctioning equipment and ensure tanks are functioning as designed.
5) ASTs shall be equipped with a form of liquid-level detection (i.e. sight gauge, electronic monitoring).
6) ASTs shall be equipped with overfill prevention (i.e. overfill alarm and/or overfill prevention valve).
7) Tanks and piping should be protected from vehicle impact via barriers, bollards, guard rails, etc.
8) Install ASTs on solid foundations over impervious surfaces, and away from areas of concentrated run-off, storm drains, and other stormwater conveyances.
9) Properly label all storage tanks (e.g., contents, capacity, etc.).
10) Keep remote fills and fill port spill buckets clean and dry.
11) Keep fill ports, gates, and tank areas secured when not in use to prevent fuel theft and tampering.
12) Have an adequate supply of appropriate spill response equipment readily available and clean up all spills and leaks immediately utilizing dry cleaning techniques (e.g. absorbents and brooms).
13) Facilities that maintain 1,320 gallons or more of aboveground oil products shall prepare and implement a Spill Prevention, Control, and Countermeasure (SPCC) Plan, per 40 CFR 112.
14) Facilities that maintain 1,000 gallons or more of used oil or 10,000 gallons or more of virgin oil in ASTs shall obtain an Individual Oil Operations Permit from the MDE, per COMAR 26.10.01.09.
15) Owners/Operators of facilities that maintain more than 2,500 gallons of oil in ASTs are required to register each AST with MDE, per COMAR 26.10.01.10.

Bulk Fluid Transfers (Deliveries)

1) All bulk fluid transfer operations shall be performed under the direct supervision of knowledgeable County personnel. At no time shall the delivery vehicle or delivery vehicle operator be unsupervised.
2) The product level within the tank must be measured and available capacity verified before delivery.
3) Deliveries shall be made via fill ports equipped with catch basins to capture drips and spills.
4) Ensure an adequate supply of appropriate spill response equipment is readily available.
5) Post signs in delivery area displaying proper delivery procedures and emergency contact information.

ABOVEGROUND STORAGE TANKS

Used Oil Tanks

1) County personnel must verify the level of product in used oil tanks prior to filling.
2) Used oil tanks should only be filled via designated fill ports. Pumping used oil into the tank via a closed piping system is preferred to manually pouring used oil into the tank.

Brine Tanks

1) If multiple tanks are located onsite, the tanks should be plumbed to ensure that the complete failure of one tank will not drain all the tanks in the system (tanks must be isolated).
2) Minimize seeping and leaking at fittings by properly supporting piping and fittings, using flexible connectors or hoses to reduce stress, and installing corrosion-resistant fittings.
3) Consider placing hoses in non-permeable trenches or using drip-less nozzles to reduce repeated small spills.

RESIDENT DROP-OFF CENTER

GH-08

Not Applicable ☒ Applicable ☐

CONCERN

Resident Drop-Off Centers are publicly accessible facilities where residents can drop off used automotive fluids (i.e. oil or antifreeze), municipal waste, recyclable, and/or organic waste, typically free of charge. Improper transfer or management of the waste materials can allow a number of pollutants including oils and greases, toxic and chemical compounds, nutrients, metals, and other wastes to enter waterways.

POLLUTION PREVENTION MEASURES

General *(applicable to all materials collected)*

1) Clearly identify waste materials accepted by the facility, and clearly mark designated collection areas.
2) Waste material should be inspected by a County representative, prior to disposal.
3) Avoid positioning waste receptacles near storm drains, water bodies, or areas of concentrated runoff.
4) When practical, receiving areas should be covered.
5) Do not allow containers to overflow or waste materials to accumulate on the ground.

Automotive Fluid Collection

1) Used oil, antifreeze, and automotive fluid receiving areas should be on impervious surfaces, covered, and provided with secondary containment, which shall be maintained clean and dry.
2) Provide lidded waste receptacles in the receiving area for the public to dispose of empty containers. Waste receptacles shall be emptied routinely and waste disposed of properly.
3) Collection areas shall be inspected daily and all trash and spilled liquids appropriately cleaned up.
4) The available capacity of waste liquid collection containers shall be routinely verified and waste removals scheduled, as needed.
5) Install appropriate controls to prohibit the overfilling of waste fluid collection containers.
6) Place appropriate spill response equipment in close proximity to drop-off areas.
7) If aboveground tanks are used to collect waste fluids, refer to BMP Fact Sheet GHP-07 (Aboveground Storage Tanks) for additional recommendations.

Organic Debris Collection

1) Routinely transfer collected organic debris/waste to a composting or disposal facility.
2) Do not permit composting of organic waste except at properly designed and permitted facilities.
3) Enact controls to prevent leaves and other windblown debris from entering stormwater inlets.

Municipal Waste / Recyclables Collection

1) Refer to BMP Fact Sheet GHP-01 (Waste Management) for additional recommendations.

BMP Fact Sheet

STOCKPILES

GH-09

Not Applicable ☒ Applicable ☐

CONCERN

The County may stockpile various erodible materials, the type of material can vary depending on the needs of the County. Stockpiled material may include soil, sand, millings, slag, cinders, sawdust, landscaping bark, compost, etc. Exposed stockpiles can easily erode due to wind or precipitation and contribute suspended solids to stormwater runoff.

POLLUTION PREVENTION MEASURES

1) Maintain stockpiles of erodible materials within roofed storage buildings or covered storage bins, if feasible. If not, stockpile material on an impervious surface and cover the stockpile.
2) Temporary stockpiles should be placed on an impermeable membrane (tarp) for quick clean-up.
3) Locate stockpiles away from drain inlets, catch basins, swales, areas of concentrated stormwater flow, water bodies, and environmentally sensitive areas.
4) Divert stormwater flows away from/around the stockpiles using a diversion device (e.g., temporary swale, berm, sandbags, or diversion fence).
5) Cover temporary stockpiles of erodible materials with a tarp that has been adequately secured. The covers must be in place at all times when the stockpile is not in active use.
6) When accessing a portion of the stockpile, only remove a section of the cover to minimize exposure to the elements.
7) Use barriers to isolate stockpiled materials from high-traffic areas to prevent tracking of materials.
8) Sweep (do not wash or hose down) in front of material stockpile storage areas at regular intervals, following loading and unloading activities, and during times of heavy use.
9) If material is observed migrating from the stockpile, clean up all migrated material upon discovery and provide additional controls to reduce migration from the stockpile. If such measures are ineffective implement controls to capture pollutants before they migrate off-site (e.g. silt fencing, inlet filters, filter socks, at-grade inlet protection, etc.).
10) Minimize material stockpile inventory based on historical inventory/usage records and public safety operational needs.
11) Cold mix asphalt shall be stored on and covered with plastic sheeting or comparable material.
12) Routinely inspect outdoor material stockpiles to verify existing controls are functioning properly and for signs of erosion or material transport.

BMP Fact Sheet

DEICING MATERIALS

GH-10

Not Applicable ☒ Applicable ☐

CONCERN

When salt and other de-icing materials are stored outside and uncovered, they have a much higher risk of being eroded and transported offsite by stormwater. Improper de-icing material and sand storage may result in stormwater runoff containing elevated concentrations of sodium chloride and dissolved solids. Sodium chloride (e.g., road salt) is an effective deicer but can be highly corrosive to stormwater facilities. Smaller waterways are at a higher risk to increases in salinity, which can threaten aquatic species. Additionally, runoff containing sodium chloride has the potential to reach drinking water sources where small traces can adversely impact public health.

POLLUTION PREVENTION MEASURES

1) Bagged de-icing chemicals must be stored indoors. If stored outdoors bags must be kept on pallets (off the ground) and covered at all times. Bags must be intact without holes or openings.
2) Bulk de-icing materials shall be stored under cover and on an impervious surface.
3) Bulk salt storage areas/buildings shall not be overfilled so that salt spills out beyond the entrance of the storage area/building.
4) Bulk salt storage areas/buildings shall be maintained in a structurally sound condition and in a way that prevents the release of salt and the infiltration of stormwater. Deicing materials should not touch the sides of metal storage containers.
5) Barriers such as berms, gates, knee walls, tarps, and/or straw bales shall be placed at the entrances of bulk salt storage areas/buildings to prohibit the migration of salt and prevent contact with precipitation/stormwater runoff.
6) Routinely inspect storage areas for migrating materials or deterioration of containment structures. Sweep up all migrating materials upon discovery and repair the source of the migrating pollutant.
7) Loading areas should be constructed of impervious material and covered or enclosed, to the extent practical, to reduce potential contact with stormwater.
8) Minimize the distance de-icing materials are transported during loading/unloading activities.
9) Prevent and/or minimize the spillage of salt and de-icing materials during loading/unloading activities, immediately clean spilled or tracked materials.
10) Sweeping of storage and loading/unloading areas shall be conducted immediately following loading/unloading activities.
11) Do not store de-icing materials (bulk or bagged) over or immediately adjacent to drains or waterways.
12) Control site drainage by diverting stormwater run-on away from storage/loading areas using appropriate measures (e.g., curbing, berms, etc.).
13) Slope storage/loading areas to direct salt-contaminated runoff to an appropriate collection area, and in a manner that prevents the runoff from reaching adjacent soil or surface waters.
14) Excess salt shall be removed from salt handling equipment (trucks, spreaders, etc.) following use/prior to storage. All cleaning shall occur on an impervious surface, which is sloped or curbed to contain any washwater and direct it to a collection area for recycling or proper disposal.

Appendix A

GHP Site Inspection Checklist

GOOD HOUSEKEEPING PLAN (GHP)
SITE INSPECTION CHECKLIST

Facility Name: _____ **Inspection Date:** _____

Inspector Name: _____ **Inspector Signature:** _____

- The intent of this inspection is to ensure that the site is being properly maintained and that there are no visible signs of pollutants entering the stormwater system.
- **A shaded status box designates an item in a non-compliant status. Please provide an explanation for all non-compliant items and subsequently document all corrective actions performed.**
- Retain the completed checklists for five (5) years.

Item	Status			CORRECTIVE ACTIONS/COMMENTS *Items which cannot be corrected immediately must be reported to the GHP/NPDES Program Manager*
	Yes	No	N/A	
GENERAL HOUSEKEEPING				
1. Are exterior areas of the facility free of accumulated trash, debris, and unneeded materials?				
2. Are stormwater drains and inlets free from debris, sediment, and evidence of spills/releases?				
3. Is the facility free from signs of erosion?				
4. Are paved surfaces free of accumulated sediment?				
5. Is spill response equipment available in maintenance areas, fueling areas, hazardous material storage areas, and/or other required areas?				
6. Are spill kits and absorbent materials clearly labeled and accessible (i.e. items are not piled on top of or in front of spill kits)?				
7. Are spill kits secured from being stolen or misused?				
8. Is there a labeled container present for the disposal of used spill cleanup material?				

GOOD HOUSEKEEPING PLAN (GHP)
SITE INSPECTION CHECKLIST

Item	Status			CORRECTIVE ACTIONS/COMMENTS *Items which cannot be corrected immediately must be reported to the GHP/NPDES Program Manager*
	Yes	No	N/A	
9. Does spill response equipment (i.e. spill kits, absorbent materials) need to be replenished?				
WASTE MANAGEMENT				
10. Are areas around solid waste containers/roll-offs/compactors free of excessive trash accumulation or overflowing containers?				
11. Are areas around solid waste containers/roll-offs/compactors free of visible evidence (i.e. leaks, staining) of ongoing stormwater pollution?				
12. Are scrap metal containers in good order and free from evidence of leaking oil/grease?				
13. For dumpsters, roll-offs, and other waste receptacles, where leaks are observed, have appropriate controls (e.g. containment, spill response, etc.) been enacted?				
14. Are the lids (if present) to solid waste containers closed?				
15. Is street sweeping/vactor waste being managed appropriately (i.e. no evidence of material migration)?				
16. Is waste cooking grease managed appropriately (i.e. no evidence of spilled material or excessive staining)?				
VEHICLE & EQUIPMENT STORAGE				
17. Are stored vehicles/equipment free from leaks?				
18. If leaks are present, are they being managed appropriately (drip pan or other methods in place to capture released liquids)?				
19. Are storage areas free of visible evidence of chronic leaks/spills (i.e. significant staining)?				

GOOD HOUSEKEEPING PLAN (GHP)
SITE INSPECTION CHECKLIST

Item	Status			CORRECTIVE ACTIONS/COMMENTS *Items which cannot be corrected immediately must be reported to the GHP/NPDES Program Manager*
	Yes	No	N/A	
VEHICLE & EQUIPMENT REFUELING				
20. Are the areas around refueling areas free from evidence of spills or leaks?				
21. Are refueling areas free of used absorbent material that has not been swept/cleaned up?				
22. Do fuel dispensers and hoses appear to be in good working order and well-maintained?				
VEHICLE MAINTENANCE				
23. Is there any indication that vehicle maintenance activities are being conducted outdoors?				
24. Is there any indication that vehicle maintenance activities are contributing to stormwater pollution?				
VEHICLE & EQUIPMENT WASHING				
25. If performed on-site, does all vehicle/equipment washing occur indoors?				
26. Is wash water collected and disposed of properly?				
27. Is there any indication that vehicle/equipment wash water is being released to stormwater conveyances or pervious areas?				
MATERIAL STORAGE				
28. Are all outdoor storage areas free from visible signs of leaks or spilled material?				
29. Are material storage containers in good condition?				

GOOD HOUSEKEEPING PLAN (GHP)
SITE INSPECTION CHECKLIST

Item	Status			CORRECTIVE ACTIONS/COMMENTS *Items which cannot be corrected immediately must be reported to the GHP/NPDES Program Manager*
	Yes	No	N/A	
30. Are drums, totes, and other containers (that are <u>not</u> empty) stored off the ground and covered, or stored indoors?				
31. Are liquid-containing drums/totes located outdoors provided with secondary containment?				
32. Are containers that are located outdoors equipped with closed lids except when material transfers are occurring?				
33. Are materials, which could impact stormwater, stored away from heavy traffic areas, or protected from vehicle collisions?				
34. Are chemical storage containers properly labeled?				
35. If empty drums are stored outside, are all openings equipped with caps to prevent water intrusion?				
ABOVEGROUND STORAGE TANKS				
36. Are all storage tanks, and surrounding areas free from visible signs of leaks or spilled material?				
37. Do storage tanks appear to be in good working order (e.g. free of obvious signs of damage or malfunctioning equipment)?				
38. Are remote fills associated with tanks free of liquid and debris?				
RESIDENT DROP-OFF CENTERS				
39. Are waste collection areas clearly identified?				
40. Are used oil/antifreeze collection tanks, containment structures, and surrounding areas free from visible signs of leaks or spilled material?				

GOOD HOUSEKEEPING PLAN (GHP)
SITE INSPECTION CHECKLIST

Item	Status			CORRECTIVE ACTIONS/COMMENTS *Items which cannot be corrected immediately must be reported to the GHP/NPDES Program Manager*
	Yes	No	N/A	
41. Do used oil/antifreeze collection tanks appear to be in good working order (e.g. free of obvious signs of damage or malfunctioning equipment)?				
42. Are empty used oil/antifreeze containers being collected and disposed of in the trash?				
43. Are areas around waste/recyclables containers free of excessive trash accumulation or overflowing containers?				
44. Are areas around waste/recyclables containers free of visible evidence (i.e. leaks, staining) of ongoing stormwater pollution?				
45. Are organic debris collection areas free of visible evidence of ongoing stormwater pollution (e.g. leaves and debris in stormwater conveyances)?				
STOCKPILES				
46. Are material piles, including salt, soil, sand, and millings isolated (i.e. covered, bermed, etc.) to prevent stormwater run-on and run-off?				
47. Are areas surrounding material piles (e.g. salt, soil, sand, millings, etc.) free of tracked or migrated material?				
DEICING MATERIALS				
48. Are all deicing materials stored indoors or undercover?				
49. Are salt storage structures in good condition (e.g. no evidence of material escaping or stormwater infiltration)?				
50. Is the salt loading area clean?				

GOOD HOUSEKEEPING PLAN (GHP)
SITE INSPECTION CHECKLIST

Item	Status			CORRECTIVE ACTIONS/COMMENTS *Items which cannot be corrected immediately must be reported to the GHP/NPDES Program Manager*
	Yes	No	N/A	
51. If deicing materials are tarped, is the tarp secure and covering the entire pile?				
52. Are bags of salt stored indoors, or off the ground and covered?				

ADDITIONAL COMMENTS:

Appendix B

GHP Stormwater Conveyance System Inspection Checklist

GOOD HOUSEKEEPING PLAN (GHP)
STORMWATER CONVEYANCE SYSTEM INSPECTION CHECKLIST

Facility Name: _____ **Inspection Date:** _____

Inspector Name: _____ **Inspector Signature:** _____

- The intent of this inspection is to ensure the free flow of stormwater within on-site conveyance systems and prevent damage/flooding.
- **If maintenance is needed, please provide an explanation, and document all corrective actions performed.**
- **Inspections shall include visually accessible infrastructure only; at no time shall inspection personnel enter a confined space.**
- Retain the completed checklists for five (5) years.

Item	Item Checked (Y/N/NA)	Maintenance Needed (Y/N)	CORRECTIVE ACTIONS/COMMENTS *Items which cannot be corrected immediately must be reported to the GHP/NPDES Program Manager*
CATCH BASINS / INLETS			
1. Look for debris and sediment blocking catch basin grates. If found, remove.			
2. Look for damage or cracks to the frame, grate, basin walls or bottom. If found, schedule repairs or replacement.			
3. Look for sediment and debris in the catch basin sump. If sediment fills 60% of the sump or comes within 6” of a pipe it should be scheduled for cleaning.			
4. If any type of filtering device is present, verify that the filter is not clogged, torn, or damaged; clean if clogged, replace if damaged.			
PIPES / CULVERTS			
5. Look for evidence of clogged piping (e.g. visual obstructions, standing water within manholes/inlets structures, etc.). If found, remove or schedule cleaning.			
6. Verify vegetation growth, if present, does not impede water flow. If it does, mow, cut back, or remove.			

GOOD HOUSEKEEPING PLAN (GHP)
STORMWATER CONVEYANCE SYSTEM INSPECTION CHECKLIST

Item	Item Checked (Y/N/NA)	Maintenance Needed (Y/N)	CORRECTIVE ACTIONS/COMMENTS *Items which cannot be corrected immediately must be reported to the GHP/NPDES Program Manager*
7. Inspect for damaged piping, inlets, outlets, headwalls, wingwalls, or excessive erosion. If found, make or schedule repairs.			
DITCHES / TRAPEZOIDAL SWALES			
8. Check for erosion, slumping, or undercutting. If found, make or schedule repairs.			
9. Look for trash and sediment accumulation. Remove all trash and remove sediment if it will impede water flow or clog downstream structures.			
10. Verify vegetation growth does not impede water flow. If it does, mow, cut back, or remove. Remove any trees or shrubs growing within the ditch.			
11. Check the integrity of check dams, filter socks, or other flow dissipation/filtering devices within the ditch or swale. Perform or schedule service if they are clogged, damaged, or deteriorated.			
12. Check inlets and outlets for debris accumulation, damage, or erosion. If found, make or schedule repairs.			

ADDITIONAL COMMENTS:

GUIDANCE DOCUMENT
GOOD HOUSEKEEPING PLAN - STORMWATER CONVEYANCE INSPECTIONS

INTRODUCTION

Maintaining catch basins, stormwater inlets, and other stormwater conveyance structures on a regular basis will remove pollutants, prevent backups, and ensure the system functions as intended to avoid flooding.

Each GHP-covered facility is required to conduct routine stormwater conveyance system inspections to ensure the free flow of stormwater within the conveyance system(s). The GHP includes a *"GHP Stormwater Conveyance System Inspection Checklist"*, to be used when completing the required inspections. This document provides additional background and guidance to aid facility personnel in completing the inspections.

CATCH BASINS / INLETS

Catch basins and inlets are all points for stormwater to enter storm drain systems. These structures are typically part of a larger conveyance system with many interconnected components where the impairment of one component can compromise the functionality of the larger system. Inlets and catch basins are subject to functional impairment by a variety of conditions, including:

- Structural damage including from vehicles and plows
- Cracks/joint separation at piping (inlet and outlet) connections
- Leaking due to cracks and joint separation
- Missing or damaged grates and grate frames
- Corrosion
- Blockage caused by debris, sediment, vegetation, or other objects

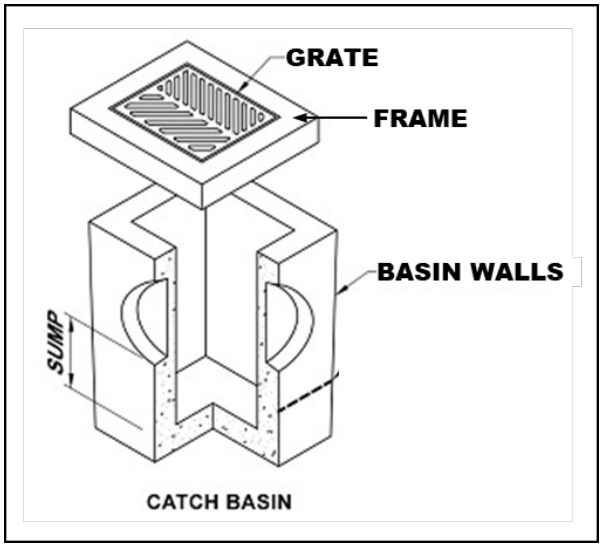

Figure 1 – Catch Basin Diagram

The following photos provide additional information related to the various inspection items, including examples of typical issues that may be encountered. The photo numbers correspond to the inspection checklist item number.

Inspection Item #1 [1]



Debris and sediment blocking inlet/catch basin grate.

Inspection Item #2 [2]



Damaged Grate

Inspection Item #2 [3]



Damaged Frame

Inspection Item #2 [4]



Failing brick walls with a stormwater inlet.

Inspection Item #2 [5]



Failing asphalt surrounding the inlet

[1] Grand Valley State University - https://www.gvsu.edu/groundswell/clogged-storm-drains-71.htm
[2] Georgia Department of Transportation – Stormwater System Inspection and Maintenance Manual, March 2020
[3] https://catchbasinauthority.ca/catch-basin-101/
[4] https://www.fixasphalt.com/catch-basin-repairs
[5] https://ccpia.org/catch-basin-and-manhole-inspections/

Inspection Item #3 [6]



Sediment and debris inside stormwater inlet

Inspection Item #3

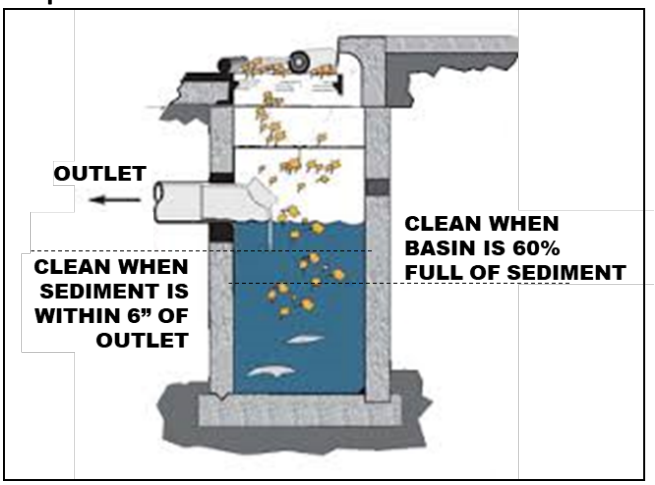

Remove sediment from a catch basin if it fills 60% of the sump or comes within 6" of a pipe.

Inspection Item #4 [7]



Example of inlet filter. Replace when filled or damaged.

Inspection Item #4 [8]



Example of an inlet filter sock, replace if damaged.

PIPES AND CULVERTS

Pipe systems are designed to convey stormwater runoff safely and effectively from inlets to various discharge points and outfalls. A culvert is a structure that channels water under an obstacle such as a roadway or railroad. These structures are subject to functional impairment by a variety of conditions, including:

- Blockage or obstruction due to build up of vegetation, debris, sediment, or other objects
- Cracks and/or joint separation
- Collapsed pipe
- Corrosion
- Root intrusion
- Lack of stabilization

[6] https://www.fixasphalt.com/catch-basin-repairs
[7] https://store.interstateproducts.com/products/Ultra-Drain-Guards/Ultra-Drain-Guard-Adjustable-Frame-Model
[8] https://www.newpig.com/pig-sediment-filter-sock/p/FLT787

Inspection Item #5 [9]



A pipe filled with sediment, inhibiting flow.

Inspection Item #5 [10]



Standing water around an inlet may indicate a blockage.

Inspection Item #6 [11]



Pipe conveyance filled with vegetation.

Inspection Item #7 [12]

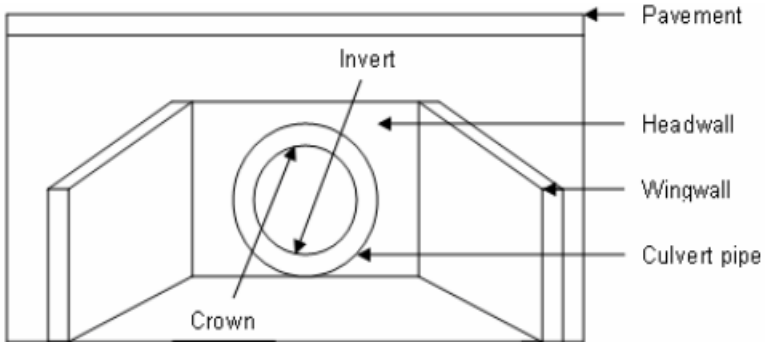

Diagram depicting various components of a culvert.

[9] Georgia Department of Transportation – Stormwater System Inspection and Maintenance Manual, March 2020
[10] https://www3.epa.gov/region9/water/npdes/stormwater-feature.html
[11] Georgia Department of Transportation – Stormwater System Inspection and Maintenance Manual, March 2020
[12] https://www.researchgate.net/figure/Components-of-a-Culvert_fig34_228685906

Inspection Item #7 [13]



A crack is the culvert headwall.

Inspection Item #7 [14]



Evidence of erosion around a culvert.

DITCHES AND SWALES

Ditches and swales serve similar functions. Both are used to convey stormwater. However, there are slight differences. A ditch is a narrow channel typically found along roads and at the edges of parking lots/driveways. A swale is like a ditch, but it is broad and shallow, and usually covered or lined with turfgrass or stone. Issues associated with these structures, which could impede their function include:

- Blockage or obstruction due to vegetation, debris, sediment, or other objects
- Erosion
- Rapidly moving water
- Lack of adequate vegetative cover for grass-lined channels

Inspection Item #8 [15]



Erosion and slumping within a drainage ditch.

Inspection Item #8 [16]



Slumping within a drainage swale.

[13] https://www.sbt-durabi.org/articles/xml/ARN0/
[14] https://lufkindailynews.com/news/local/culverts-crumbling-in-precinct-1/article_a9fed902-4379-5248-ab11-7471e2974298.html
[15] https://graniteseed.com/blog/how-to-stop-a-ditch-from-eroding/
[16] https://www.mnwcd.org/erosion-control

Inspection Item #9 [17]



Litter and debris within a ditch.

Inspection Item #9 [18]



Litter and debris within a swale.

Inspection Item #10 [19]



Cracks and joint separation in concrete channels, removal of vegetation may prevent future damage.

Inspection Item #11 [20]



Rock check dam across a channel.

Inspection Item #11 [21]



Filter sock check dams across a grass swale.

[17] https://craven.ces.ncsu.edu/2023/02/for-those-who-love-to-litter/
[18] https://www.cityoftulsa.org/government/departments/public-works/stormwater-quality/adopt-a-stream/
[19] Georgia Department of Transportation – Stormwater System Inspection and Maintenance Manual, March 2020
[20] EPA Stormwater Best Management Practice, Check Dams, December 2021
[21] EPA Stormwater Best Management Practice, Check Dams, December 2021

Inspection Item #12 [22]



Inlet to a rock-lined swale.

Inspection Item #12 [23]



Sediment accumulation at swale inlet.

END OF DOCUMENT

[22] https://www.stormwater.com/erosion-control/vegetation-management/article/13016118/inlet-protection-during-constructionand-after

[23] https://www.stormwater.com/erosion-control/vegetation-management/article/13016118/inlet-protection-during-constructionand-after

Appendix C

General Spill Response Procedures

SPILL RESPONSE AND NOTIFICATION PROCEDURES

A. Discovery of a Spill

1. Upon discovery of a spill, facility personnel should immediately assess the situation and determine if the spill is considered a "Minor" or "Major" spill. For a spill to be considered "Minor" all the following conditions must be satisfied:

    - ❖ The type of material spilled is known;
    - ❖ The spill is confined to the immediate work area;
    - ❖ The spill has not reached storm drains, sanitary sewer systems, open water, or surrounding soils;
    - ❖ The spill can be safely managed;
    - ❖ The employee can contain and clean up the spill with the PPE that is normally used in the work area;
    - ❖ The spill does not pose a serious threat of fire or an explosion; and
    - ❖ The spill does not pose conditions that are immediately dangerous to life or health.

2. If all the above conditions are met, the spill is considered "Minor". Refer to ***Section B*** of this document for appropriate response actions.

3. If all the above conditions are not met, then the spill is considered "Major". Refer to ***Section C*** of this document for appropriate response actions.

4. If a spill involves flammable liquids, ignitable vapors may be present - precautions must be taken to prevent ignition. Do not turn on or off equipment since sparks may be generated. Additionally, avoid the movement of equipment that could create static electricity. Larger spills of flammable liquids could pose a fire threat and would be considered a "Major" spill. Refer to ***Section C*** for appropriate actions.

B. Response to a "Minor" Spill

1. Identify the source of the spill and the direction in which the spill is heading.

2. Attempt to stop the spill at the source. Where applicable, the source of the spill shall be taken out of service until repairs can be made. If the spill is related to a fuel dispensing system, activate the Emergency Shut-Off (ESO) switch to prevent additional fuel disbursements.

3. If material is released outside a containment area, it is crucial that the material be contained as quickly as possible. Following proper safety procedures, use absorbent materials or diking to contain the spill. Prevent the spill from reaching storm drains, sanitary sewers, or open water. If a spill is flowing toward a drain, install temporary diking around the drain, block off the drain with a drain cover, or place absorbent material around the drain to prevent a discharge.

4. Once the spill has been stopped and contained, estimate the quantity of the spill. Consult applicable Safety Data Sheet (SDS) for material compatibility and environmental precautions. Note and follow recommendations regarding special precautions, spill response equipment, methods, or precautions. All cleanup work shall be conducted in accordance with existing safety protocols and SDS recommendations. Contact the facility Superintendent/Supervisor, or designee, for assistance if needed.

5. Recover or clean up the spilled material as much as possible. Material that cannot be reused must be discarded in accordance with state and federal regulations. Liquids absorbed by porous materials (e.g., wood, gravel, significant quantities of absorbent material, etc.) shall be placed into US DOT-approved 30-gallon or 55-gallon steel drums. Following cleanup, the container shall be secured and appropriately labeled to identify the contents and the date of the spill/cleanup. Containers shall be stored indoors and provided with secondary containment until transported off-site for disposal.

6. For spills that do not involve flammable liquids or other potential hazardous wastes, small quantities of used absorbent materials may be double bagged and disposed of along with municipal trash as long as all liquids have been absorbed (no free liquid may be present).

7. If the spilled material is a flammable liquid, corrosive liquid (pH ≤ 2 or ≥ 12.5), or other potential hazardous waste, all recovered product, impacted material, and used absorbent must be placed into a US DOT-approved containers/drums. Following cleanup, the container(s) shall be secured and appropriately labeled to identify the contents and the date of the spill/cleanup. Containers shall be stored indoors and provided with secondary containment until transported off-site for disposal. The facility Superintendent/ Supervisor, or designee shall be notified that a potential hazardous waste was released and that a waste characterization may be needed to facilitate proper disposal.

8. Surfaces that are contaminated by the spill shall be cleaned utilizing dry absorbent material. Tools and equipment that have been used in the cleanup must be decontaminated immediately after use. Decontamination water (if used) must be minimized, containerized, and disposed of properly.

9. If waste requires disposal, notify the facility Superintendent/Supervisor, or designee who will arrange for the proper characterization and disposal of any waste material. Representative sampling and analysis may be necessary to properly characterize the waste. The waste must be transported and disposed of in compliance with all applicable laws and regulations. Waste manifests, trip tickets, or bills of lading (if required) for waste disposal shall be kept on file.

10. Facility personnel shall restock/replace spill response equipment and absorbent materials used during the clean-up efforts.

11. The facility Superintendent/Supervisor, designee, or other appropriate County personnel shall be notified of the spill in accordance with ***Section D*** of this document.

C. Response to "Major" Spill

A "Major" spill is any discharge that does not meet the definition of a "Minor" spill. Any employee or contractor observing, being involved with, or recognizing a potential or actual spill of oil or other hazardous material, other than a "Minor" spill is responsible for performing the following actions:

1. If there is no danger to human health, attempt to stop and contain the spill at the source. If the spilled material is unknown, if PPE other than that which is typically used in your work area, is necessary to approach the spill area, or if assistance is required to stop the spill, do not attempt to contain the spill. If the spill is related to a fuel dispensing system, activate the Emergency Shut-Off (ESO) switch.

2. Most County employees lack the appropriate training to respond to "Major" spills. If the spill is of an unknown substance, is of a quantity that cannot be safely managed, or poses other risks beyond the training level of the employee, the employee should not attempt to contain or clean up the spill.

3. Evacuate individuals from the area and keep personnel away from the impacted area.

4. Immediately notify the facility Superintendent/Supervisor, or designee of the incident. The notified individual will determine the need for further evacuations and contact emergency response personnel (911), as necessary. *If a situation represents an immediate and grave danger to personnel, the public, structures, or other infrastructure, the individual discovering the incident may call 911 directly without first notifying facility management.*

5. The facility Superintendent/Supervisor or designee will determine if assistance from emergency response contractors is required to clean up the incident and will coordinate such spill response efforts with spill response contractors and other County agencies and first responders.

6. Facility personnel will provide assistance to emergency responders, as appropriate.

D. Reporting a Spill (Internal Notifications)

1. Once a spill is contained and cleanup operations have been initiated, the individual discovering the spill shall notify the appropriate County representatives and provide the following information:

    a) Identify the location, date, and time of the incident;
    b) Identify the type of material spilled or discharged;
    c) Estimate the quantity spilled and the rate of the spill;
    d) Identify the cause of the spill or discharge;
    e) Identify impacted media or infrastructure (soil, storm drains, open water bodies, etc.);
    f) Determine the extent of injuries involved; and
    g) Provide response measures implemented by the facility personnel.

E. Reporting a Spill (Regulatory Notifications)

State of Maryland Reporting Requirements (COMAR 26.10.01.05)

1. Upon discovery of a spill, the Responsible Person shall notify the MDE Emergency Response Division **within two (2) hours** by calling 866-633-4686. The caller shall be prepared to provide the following information:

    a) The time and date of the spill;
    b) The location and cause of the spill;
    c) The mode of transportation or type of facility involved;
    d) Type and quantity of oil spilled;
    e) Details regarding any assistance required;
    f) The name, address, and telephone number of the person making the report; and
    g) Any other pertinent information requested by the Department.

2. MDE will provide further guidance on additional responsibilities.

3. Within **ten (10) working days** of the completed removal and clean-up activities, the Responsible Person shall prepare a report using either County letterhead detailing the incident. The report shall contain the following:

    a) Date, time, and place of the spill;
    b) The amount and type of oil or hazardous substance spilled;
    c) A complete description of circumstances that contributed to the spill;
    d) A complete description of the containment and removal operations performed, including disposal sites to which oil refuse was transported;
    e) Procedures, methods, and precautions instituted to prevent the recurrence of an oil spill from the facility involved;
    f) Any other information considered necessary or required by the MDE for a complete description of the incident; and
    g) A certification that the information provided is true and correct to the knowledge of the person signing the report.

4. The completed report shall be submitted to mdeerd.mema@maryland.gov or faxed to 410-537-3932.

5. A digital copy of the completed report and any accompanying documentation shall be retained

Federal Reporting Requirements - National Response Center (40 CFR 110)

1. If any of the following criteria are met the Responsible Person shall notify the National Response Center (NRC) **within two (2) hours** of the spill discovery by calling 800-424-8802 or 202-426-2675.

    - ❖ The spill has caused a film, sheen, or discoloration of the surface water or shorelines;
    - ❖ The material spilled will violate applicable water quality standards (surface water or groundwater); or
    - ❖ The spill has caused a sludge or emulsion to be deposited beneath the surface of the water or on the shoreline.

2. At a minimum, the following information shall be provided to the NRC:

    a) Name, organization, and telephone number of reporting party;
    b) Name and address of the responsible party;
    c) Date, time, and location of the incident;
    d) Source and cause of the discharge;
    e) Type of material(s) discharged;
    f) Quantity of materials discharged;
    g) Danger or threat posed by discharge;
    h) Number and types of injuries (if any);
    i) Weather conditions at the incident location; and
    j) Other information to help emergency personnel respond to the incident.

3. If unable to report to the NRC, reports can be made to the EPA Regional Office at 800-438-2474 or the U.S. Coast Guard (USCG) at 202-372-1001. The NRC, EPA, or USCG will provide further guidance.

4. A digital record of the NRC notification and any accompanying documentation shall be retained on-site.

Federal Reporting Requirements - EPA Regional Administrator (40 CFR 112.4)

1. If the facility where the spill occurred is regulated under 40 CFR 112 and is required to have a Spill Prevention, Control, and Countermeasures (SPCC) Plan, the Responsible Person shall report the spill to the EPA Region III Administrator when any of the following criteria are met:

   - More than 1,000 gallons of oil is discharged to navigable waters or adjoining shorelines in a single incident; or
   - More than 42 gallons of oil is discharged to navigable waters or adjoining shorelines in each of two incidents occurring within any twelve-month period.

2. The report shall be made in writing **within 60 days** of the spill and shall contain:

   a) Name and location of the facility;
   b) Owner/operator name;
   c) Maximum storage/handling capacity of the facility and normal daily throughput;
   d) Corrective actions and countermeasures taken;
   e) Adequate description of the facility including maps, and flow diagrams;
   f) Cause of the discharge to navigable waters, including a failure analysis;
   g) Additional preventative measures taken or planned to minimize discharge reoccurrence; and
   h) Other information required by the EPA Regional III Administrator.

3. The report shall be submitted to the EPA Regional Administrator at the following address:

   EPA Regional Administrator
   US EPA Region 3
   1650 Arch Street (3RA00)
   Philadelphia, PA 19103-2029

4. A copy of the report shall be retained in the facility SPCC Plan.

Appendix D

Training Records

GOOD HOUSEKEEPING PLAN (GHP)
TRAINING ATTENDANCE LOG

FACILITY NAME: _____

DATE	NAME *(PRINT)*	SIGNATURE

By signing I affirm that I have completed the required annual training; and I am aware of and understand my responsibilities under this Plan.

GOOD HOUSEKEEPING PLAN (GHP)

Division of Facilities & Operations
611 Fountain Green Road
Bel Air, MD 21015

June 30, 2025

TABLE OF CONTENTS

1.0 BACKGROUND & INTRODUCTION 1
1.1 Objectives 1
1.2 Potential Stormwater Pollutants 1
2.0 RESPONSIBILITIES 3
2.1 GHP Implementation 3
2.2 Plan Review and Modification 3
2.3 Inspections 3
2.3.1 GHP Site Inspections 3
2.3.2 Conveyance System Inspections 4
2.4 Training 4
3.0 BEST MANAGEMENT PRACTICES (BMPs) 5
3.1 Applicability of BMP Fact Sheets 5
3.2 BMP Fact Sheets 5

List of Tables

TABLE 1-1 POTENTIAL STORMWATER POLLUTANTS AND THEIR SOURCES 2

List of BMP Fact Sheets

GH-01 - Waste Management
GH-02 - Vehicle and Equipment Storage
GH-03 - Vehicle/Equipment Refueling
GH-04 - Vehicle Maintenance
GH-05 - Vehicle/Equipment Washing
GH-06 - Material Storage
GH-07 - Aboveground Storage Tanks
GH-08 - Resident Drop-Off Centers
GH-09 - Stockpiles
GH-10 - Deicing Materials

Appendices

Appendix A: GHP Site Inspection Checklist
Appendix B: GHP Stormwater Conveyance Inspection Checklist
Appendix C: General Spill Response Procedures
Appendix D: Training Records

List of Acronyms

AST	-	Aboveground Storage Tank
BMP	-	Best Management Practice
CFR	-	Code of Federal Regulations
GHP	-	Good Housekeeping Plan
MDE	-	Maryland Department of the Environment
MS4	-	Municipal Separate Storm Sewer System
NPDES	-	National Pollutant Discharge Elimination System
SPCC	-	Spill Prevention, Control, and Countermeasure Plan

1.0 BACKGROUND & INTRODUCTION

Polluted stormwater runoff has the potential to enter the County's storm sewer systems (referred to as a municipal separate storm sewer system or MS4), and then discharge, untreated, into local water bodies. To address this potential stormwater pollution, the County is required to obtain a NPDES permit from the Maryland Department of the Environment (MDE). The NPDES Permit requires the County to take actions to prevent stormwater pollution, maintain storm sewer systems, monitor stormwater discharges, and develop and implement comprehensive management programs to minimize the discharge of pollutants from the storm sewer system.

To comply with Part IV.D.4.b of the County's Phase I MS4 Permit, the County must develop, implement, and maintain a Good Housekeeping Plan (GHP) for certain County-owned properties not required to be covered under Maryland's General Permit for Discharges from Stormwater Associated with Industrial Activities *(General Permit 12-SWA / 20-SW).*

To support this effort, a *"Good Housekeeping Plan Applicability Certification"* has been developed to evaluate and document if a specific County-owned facility is subject to the GHP requirements. The *"GHP Applicability Certification"* includes the following ten (10) potential stormwater polluting activities. If any of the covered activities are performed at the facility, then that facility is required to implement a site-specific GHP. The GHP will include each of the potential stormwater polluting activities identified in the *"GHP Applicability Certification"* and corresponding pollution prevention procedures.

- Waste Management
- Vehicle and Equipment Storage
- Vehicle/Equipment Refueling
- Vehicle Maintenance
- Vehicle/Equipment Washing
- Material Storage
- Aboveground Storage Tanks
- Resident Drop-Off Center
- Stockpiles
- Deicing Materials

1.1 Objectives

The GHP was developed to outline suitable practices, procedures, and protocols, or Best Management Practices ("BMPs") for reducing and/or preventing stormwater pollution associated with operations at covered County-owned properties. The intent of the pollution prevention procedures included in the GHP is to limit the release of materials with the potential to impact stormwater, this includes reducing or eliminating (to the extent practical):

- The occurrence of spills and leaks;
- The accidental dumping or release of materials;
- The accumulation of waste, trash, debris, unused parts/equipment, etc.;
- The exposure of hazardous materials to precipitation/run-off;
- Stormwater run-off contamination by improperly stored materials; and/or
- Illicit discharges to the storm drain system.

1.2 Potential Stormwater Pollutants

Table 1-1 on the following page provides a list of common potential pollutants that may result from the GHP-regulated activities identified above. Understanding the sources of these pollutants can help in achieving the goals and objectives of the GHP program.

TABLE 1-1 POTENTIAL STORMWATER POLLUTANTS AND THEIR SOURCES

		Waste Management	Vehicle/Equipment Storage	Vehicle/Equipment Refueling	Vehicle Maintenance	Vehicle/Equipment Washing	Material Storage	Aboveground Storage Tanks	Resident Drop-Off Center	Stockpiles	Deicing Materials
Pollutants	**Sources**	**Associated GHP Activity**									
Sediment	Land disturbance; erosion; paved surfaces; material stockpiles; waste storage; salt/abrasive application	X				X	X		X	X	X
Hydrocarbons *(petroleum compounds)*	Leaking vehicle and equipment; vehicle and equipment cleaning; spills; improper storage; maintenance activities; scrap metal disposal; improper disposal	X	X	X	X	X	X	X	X		
Metals	Vehicle brake and tire wear; vehicle/equipment exhaust; batteries; galvanized metal; paint and wood preservatives; fuels, pesticides, and cleaners; vehicle fueling, maintenance, and washing; industrial waste	X	X	X	X	X	X	X	X		
Toxic Chemicals	Pesticide application; improper chemical storage; leaks and spills from storage containers; leaking vehicles; maintenance activities	X	X		X	X	X	X	X		
Chlorides	De-Icing chemicals										X
Trash/Debris	Improper waste storage and disposal; leaking trash containers; littering; poor housekeeping	X	X				X		X		
Nutrients (nitrogen and Phosphorus)	Fertilizers; malfunctioning septic systems; sewer overflows; animal/pet waste; vehicle washing; decaying grass and leaves; leaking trash containers; atmospheric deposition	X				X	X		X		

2.0 RESPONSIBILITIES

2.1 GHP Implementation

A separate GHP is required for each covered facility. The following individual *(identified by name and/or title)* is accountable for the administration and implementation of the GHP at this facility and has the authority to commit the necessary resources to implement this Plan.

_____

Name and/or Title of Responsible Person

The Responsible Person listed above shall ensure that facility personnel involved in any GHP-covered activities identified in this Plan, are provided with access to, and are familiar with, the contents of this Plan.

2.2 Plan Review and Modification

The *"GHP Applicability Certification"* completed for this facility must be reviewed and updated once every permit term, or within one (1) year of substantial changes to a facility's operations that could reasonably contribute to stormwater pollution. Any newly constructed/acquired facility must be assessed within one (1) year of initiating operations at the facility. The facility's GHP must be amended and reissued to the facility within one (1) year of any changes to the facility's *"GHP Applicability Certification"*.

When warranted, the BMP Fact Sheets provided in Section 3.0 may need to be updated or revised. At the same time, additional BMP Facts Sheets may be added. The need for such updates or modifications will be at the discretion of the County's GHP Program Administrator.

2.3 Inspections

The County's MS4 permit requires each facility covered by a GHP to have the following:

1. Written procedures for annually assessing County properties to prevent the discharge of pollutants, spills, and leaks into the County's storm sewer system; and

2. Written procedure for performing stormwater conveyance system inspections and for removing debris that may cause clogging, backups, and flooding.

To meet these requirements, each facility that is covered by a GHP will be required to complete routine site inspections and stormwater conveyance system inspections as detailed below. Facility management will be responsible for ensuring the necessary inspections are completed within the required timeframes, that corrective actions (if needed) are performed, and that records of inspections and completed corrective actions are maintained for at least five (5) years.

2.3.1 GHP Site Inspections

The GHP Site Inspection will be performed to ensure that each GHP-covered facility is being properly maintained and that there are no visible signs of pollutants entering the stormwater system. GHP facilities shall utilize the *"GHP Site Inspection Checklist"*, provided in ***Appendix A*** to complete the required inspection. At a minimum, each facility is to be inspected every five (5) years.

2.3.2 Conveyance System Inspections

Stormwater conveyance systems are generally comprised of curbs and gutters, catch basins, inlet structures, swales, channels, piping, culverts, detention ponds, outfalls, or other structures that are used to collect, contain, and convey stormwater runoff.

The unimpeded movement of stormwater through conveyance systems is critical in avoiding backups and flooding, which can impede facility operations and damage property. Routine inspections and preventative care of stormwater conveyance systems can ensure these systems function as intended and prevent the need for costly and time-consuming repairs and retrofits.

Each GHP-covered facility is required to conduct routine stormwater conveyance system inspections to ensure the free flow of stormwater within the conveyance systems. GHP-covered facilities shall utilize the *"GHP Stormwater Conveyance System Inspection Checklist"*, provided in ***Appendix B*** to complete the required inspections. At a minimum, facility conveyance system inspections are to be conducted every five (5) years.

2.4 Training

As part of the GHP requirements within the County's Phase I NPDES permit, annual training must be provided to all appropriate staff and contractors. Such training shall be provided to any individuals responsible for implementing the GHP, performing the required inspections, or involved in any of the GHP-covered activities identified in this Plan. The required training shall focus on the duties and responsibilities assigned to site personnel in implementing the GHP and the best management practices (BMPs) prescribed in this Plan for preventing, reducing, and eliminating the discharge of pollutants during facility activities.

The County's MS4/GHP Program Coordinator will be responsible for developing the required training and disseminating it to GHP-covered facilities. Each GHP-covered facility will be responsible for identifying staff/contractors who must attend annual training, ensuring identified staff complete the required training, and maintaining records that document training dates and attendees. Training records and other documentation shall be maintained in ***Appendix D*** of this Plan.

3.0 BEST MANAGEMENT PRACTICES (BMPs)

This section contains a BMP Fact Sheet for each of the ten (10) GHP-regulated activities. The County's operations are not limited to the BMPs contained within this document; nor is the County required to implement all of the pollution prevention measures identified within each BMP Fact Sheet. The County should select and implement those measures that are applicable and have the greatest potential for reducing stormwater pollution.

The BMP Fact Sheets contained within this document offer recommended protocols for a particular activity. These pollution prevention measures are considered non-structural BMPs with a focus on source control of potential pollutants.

3.1 Applicability of BMP Fact Sheets

The *"GHP Applicability Certification"* completed for this facility has identified the activities conducted at this facility that require coverage under this Plan. Each of the BMP Fact Sheets shall be marked as to whether they are applicable or not applicable to this facility. The Applicable/Not Applicable indicator on each BMP Fact Sheet can be revised in response to changes in operations at the facility.

3.2 BMP Fact Sheets

BMP Fact Sheets can be found on the following pages. For the sake of consistency, the general outline of a BMP Fact Sheet will be as follows:

- Identification of GHP-covered activity.
- Applicability of the BMP Fact Sheet to the facility.
- A general description of the concern the activity poses to stormwater.
- Recommended pollution prevention measures for reducing/eliminating stormwater pollution.
- Additional sources of information, if applicable.

BMP Fact Sheet

WASTE MANAGEMENT GH-01

Not Applicable ☐ Applicable ☒

CONCERN

Improperly managed waste can allow trash and debris to be washed into storm drains which poses a concern to water quality, marine life, and public health. It also has the potential to create obstructions in the drainage system, which can lead to backups and flooding. Additionally, improper storage and handling of waste materials can allow pollutants including oils and greases, toxic and chemical compounds (including nutrients), bacteria, metals, and other potentially hazardous wastes to enter waterways.

POLLUTION PREVENTION MEASURES

General *(applicable to all waste management activities)*

1) Provide suitable containers, preferably with working covers, to collect waste materials.
2) Ensure that appropriate waste containers are available in areas where waste is generated.
3) Provide a cover over waste storage areas, if feasible.
4) Avoid positioning waste receptacles near storm drains, water bodies, or areas of concentrated runoff.
5) Ensure that lids to waste containers *(if present)* are kept closed to prevent the intrusion of precipitation and prevent trash from blowing out of the receptacle.
6) For waste receptacles, which do not have lids and could leak, containers should be inspected regularly and controls (e.g., containment, spill response, etc.) shall be enacted whenever leaks or dry-weather discharges are observed.
7) Routinely inspect waste containers, roll-offs, compactors, and other waste receptacles for the presence of excessive waste accumulation and overflowing containers.
8) Ensure that wastes accumulating on the ground are placed in a suitable waste container.
9) Ensure that wastes are removed from the facility regularly by a licensed and contracted vendor.
10) Repair or replace damaged waste container lids.

Trash Compactors

1) Routinely inspect trash compactors for malfunctioning equipment or leaking hydraulic oil and provide the appropriate spill response if leaking equipment is encountered.
2) Regularly inspect compactors for leaking fluids and implement appropriate controls such as spill response/cleanup, collection or diversion of released fluids, providing secondary containment, etc. whenever leaks or dry-weather discharges are observed.

Scrap Metal Collection Containers

1) Avoid placing oily or grease-covered items in uncovered scrap metal recycling collection containers. If needed, wrap oily/greasy items in plastic garbage bags before placing them in the collection container.

Hazardous/Universal Wastes

1) Ensure that hazardous waste and universal wastes (e.g., batteries, bulbs, etc.) are collected and stored indoors or within covered collection containers.
2) Verify that hazardous/universal waste collection containers are in good condition, not leaking, and compatible with the wastes being stored.

Street Sweeping / Vactor Truck Material Storage

1) Do not site storage areas near storm drains, open water bodies, or areas of concentrated runoff.
2) Install sediment control devices (e.g. silt fence, silt socks, hay bales, etc.) around the staging area. Inspect these controls regularly and replace them as needed.
3) Cover the materials staging area, if feasible.
4) Provide oil-absorbent booms if necessary to control oily discharge. Inspect and replace booms regularly.
5) The staging area should be checked periodically for evidence of sediment migrating outside of the staging area. Material that has migrated out of the staging area should be promptly swept and returned to the staging area or disposed of.

Waste Cooking Oil/Grease

1) Maintain storage containers indoors or within a covered location, if feasible.
2) Storage containers shall be secured to prevent infiltration of precipitation and accidental/intentional spills or releases.
3) Carefully transfer waste oil/grease to the appropriate collection container to avoid spills.
4) Maintain suitable spill response equipment near collection containers. Immediately clean up any spilled oil/grease. Keep the exterior of the collection container clean and free of spilled oil/grease.
5) Provide secondary containment for collection containers, if feasible.

BMP Fact Sheet

VEHICLE AND EQUIPMENT STORAGE

GH-02

Not Applicable ☒ Applicable ☐

CONCERN

Vehicles and equipment may be stored onsite to support various County operations (e.g., construction, maintenance, snow removal, roadside assistance, mass transit, mowing, etc.). Examples of County owned and operated vehicles and equipment stored onsite at any given time include but are not limited to, the following: cars, trucks, buses, emergency response vehicles, garbage trucks, heavy equipment (backhoes, frontend loaders, etc.), forklifts, towable generators, portable light stands, and roadside equipment. Vehicle and equipment storage is considered a pollutant source due to the potential for incidental releases of petroleum products, lubricants, and various automotive fluids.

POLLUTION PREVENTION MEASURES

1) When possible/practical, store vehicles and equipment inside or under cover to prevent exposure to precipitation.
2) If vehicles or equipment must be stored outside, store vehicles/equipment in designated areas away from areas of concentrated runoff, storm drains, and other stormwater conveyances.
3) Vehicles and equipment shall be staged on impervious (asphalt or concrete) surfaces;
4) Keep truck beds clean and ensure potential stormwater pollutants are stored in closed containers, covered, or otherwise protected from stormwater exposure.
5) Conduct routine visual inspections of vehicles and equipment for the presence of leaks and respond accordingly.
6) Leaking vehicles/equipment should be moved inside or under cover. At a minimum, drip pans or absorbent pads shall be used to contain the leak until the vehicle/equipment can be relocated and the leak addressed.
7) Drain all fluids from wrecked or heavily damaged vehicles and equipment before storage.
8) Have an adequate supply of appropriate spill response equipment readily available and clean up all spills and leaks immediately utilizing dry cleaning techniques (e.g. absorbents and brooms).
9) Train staff in spill response so that incidents are addressed in a timely fashion.
10) Do not wash down areas where leaks have collected on ground surfaces; use dry cleaning methods such as granular absorbents and brooms.

VEHICLE AND EQUIPMENT REFUELING

Not Applicable ☒ Applicable ☐

CONCERN

Refueling activities associated with County vehicles and equipment can result in a discharge of fuel (gasoline and diesel fuel), which has the potential to enter the storm drain system and/or a nearby waterway. Such releases can introduce hydrocarbons, metals, and other toxic chemicals to stormwater runoff.

POLLUTION PREVENTION MEASURES

General Procedures *(applicable to all refueling activities)*

1) Routinely *(at least daily)* inspect the fuel dispensing area for any spills or leaks.
2) Routinely inspect fuel dispensing equipment looking for leaking or damaged equipment. Damaged or malfunctioning equipment shall be taken out of service until it has been repaired.
3) Fuels will only be dispensed into authorized vehicles, equipment, and approved containers.
4) Vehicle operators must remain outside of their vehicles and in attendance of fuel dispensers at all times while dispensing fuel.
5) Third-party contractors must be trained in proper refueling procedures and pollution prevention.
6) Do not utilize a foreign object to keep the dispenser nozzle in the open position. If present, a "hold-open" latch on the nozzle may be used.
7) Do not "top off" a vehicle's fuel tank once the dispenser nozzle's automatic shut-off has been activated. Topping off tanks may result in spills. Post signs in fueling areas warning vehicle operators against "topping off" of vehicle fuel tanks.
8) After refueling has stopped, allow several seconds to pass before removing the nozzle and returning it to the dispenser. This will prevent incidental dripping from the nozzle.
9) Employees refueling vehicles shall note the location of the "Emergency Fuel Shut Off" switch, to be used to stop the flow of fuel to the dispensers in the event of a release or emergency.
10) Have an adequate supply of appropriate spill response equipment readily available and clean up all spills immediately utilizing dry cleaning techniques (e.g. absorbents and brooms).
11) Immediately clean up and dispose of used absorbent material.
12) Do not wash down fueling areas; use dry cleaning methods such as granular absorbents and brooms.
13) Conduct refueling activities over impervious (e.g. concrete) surfaces. Place drip pans or absorbent pads under the nozzle if fueling occurs over a permeable surface such as grass or soil.
14) Install oil control devices in storm drains that may receive contaminated runoff from fueling areas.
15) Cover fueling areas with a canopy or roof to prevent direct contact with rainfall. Direct run-on away from fueling areas and collect fueling area run-off in a dead-end sump or oil-water separator.

Mobile Equipment Refueling

1) Refuel equipment on an impervious surface, downgradient of, and at the farthest practical distance from any storm drain, stormwater conveyance, stormwater management feature, or waterway.
2) Utilize secondary containment when refueling equipment (when practical).
3) Ensure mobile refuelers are parked in designated locations and away from areas of concentrated run-off, storm drains, and other stormwater conveyances.
4) Ensure that procedures are in place and that staff is properly trained in spill response/cleanup so that leaks and spills are addressed appropriately and promptly.

BMP Fact Sheet

VEHICLE MAINTENANCE

GH-04

Not Applicable ☒ Applicable ☐

CONCERN

Vehicle and equipment maintenance can impact the water quality of nearby waterways by exposing stormwater to various pollutants including petroleum hydrocarbons, solvents, antifreeze/coolants, used oil, lubricating oil, grease, brake fluid, metals, and various chemicals. Additionally, vehicles that are wrecked or awaiting repair can be a source of pollution if leaking fluids are not properly controlled.

POLLUTION PREVENTION MEASURES

1) Conduct vehicle and equipment maintenance activities indoors.
2) Make sure incoming vehicles and equipment are inspected for leaking fluids and oil.
3) Move leaking vehicles or equipment indoors or under cover as soon as possible. At a minimum, a drip pan or absorbent pads shall be utilized to contain the leak until the vehicle/equipment can be relocated and the leak addressed.
4) Avoid performing maintenance on vehicles in close proximity to exterior doorways, which may allow released fluids to migrate outdoors.
5) Have an adequate supply of appropriate spill response equipment readily available and clean up all spills and leaks immediately utilizing dry cleaning techniques (e.g. absorbents and brooms).
6) Keep maintenance areas neat and well organized. Remove dirt, debris, and used absorbent regularly.
7) Inspect maintenance areas as well as maintenance equipment on a routine basis.
8) Store vehicles, parts, and generated wastes indoors or off the ground and under cover whenever possible. When practical, provide secondary containment.
9) Promptly transfer used fluids to the proper waste container; do not leave full drip pans or other open containers around the shop. Empty and clean drip pans and containers regularly.
10) Waste liquids shall not be poured into floor drains, sinks, outdoor storm drain inlets, or other storm drains or sewer connections. Liquid wastes are to be collected in properly labeled containers and disposed of by a licensed waste hauler or other appropriate method.
11) Store leaking batteries in a sealed container and provide secondary containment, if feasible.
12) Clean all parts indoors utilizing a self-contained parts washer.
13) Do not hose down indoor service areas to storm drains or areas where it can seep into groundwater.
14) Maintain floor drains in good working order and inspect for proper function on a routine basis. Consider plugging floor drains that discharge to the storm sewer.
15) Ensure oil/water separators (if present) are maintained in proper working order and are checked on a routine basis for the presence of oil.
16) If maintenance work must be performed outdoors, adhere to the following requirements:
    - Conduct maintenance activities over an impervious surface, away from stormwater inlets.
    - Cover outdoor maintenance areas and direct stormwater run-on away from the area.
    - Use drip pans or drop cloths underneath the equipment to catch leaks and drips.
    - Have an adequate supply of appropriate spill response equipment readily available.
    - Clean all spills immediately using dry cleaning techniques (e.g. absorbents and brooms).
    - Avoid performing maintenance activities during precipitation events.
    - Limit temporary outdoor maintenance activities to a single shift/day if additional time is needed to cover the work area at the end of each day/shift.

VEHICLE AND EQUIPMENT WASHING

Not Applicable ☒ Applicable ☐

CONCERN

Vehicle and equipment washing can generate washwater that contains oil, grease, organic compounds, surfactants, phosphates, metals, and suspended solids. If vehicles/equipment are washed outdoors on impervious surfaces, dirty washwater can contaminate stormwater that ends up in waterways. Washing equipment over pervious surfaces can allow washwater to seep into the ground contaminating groundwater.

POLLUTION PREVENTION MEASURES

1) Vehicle and equipment washing should only be conducted in designated indoor wash bays that capture and recycle washwater to the extent practical.
2) Wastewater from the washing facility should be discharged to the sanitary sewer system under the authorization of a wastewater discharge permit issued by the local municipal authority.
3) The floor of indoor vehicle wash bays should be completely bermed or sloped to collect wash water and prevent migration outdoors.
4) No other activities (e.g., fluid changes, repairs, material storage) shall be performed in wash areas.
5) Keep the wash bay neat and well organized. Sweep or pick up all trash and debris daily or as needed.
6) Solid materials accumulated on vehicles or in vehicle beds (e.g. salt, soil, grass, etc.) shall be knocked off or otherwise removed from the vehicle (while inside the wash bay) prior to washing. Solid materials shall be collected and disposed of properly.
7) For vehicles too large to completely fit in the wash bays, only the portion of the vehicle physically located in the confines of the wash bay shall be cleaned. The vehicle shall then be rotated to allow for the remaining portion of the vehicle to be washed.
8) Use nozzles that automatically turn off water when not in use and consider high-pressure, low-volume sprays.
9) Avoid detergents as much as possible. If detergents are necessary, use a biodegradable, phosphate-free detergent.
10) If discharging to an oil-water separator, use a non-emulsifying detergent.
11) Inspect floor drain systems, holding tanks, and conveyances associated with designated wash areas regularly. Maintain oil/water separators and/or process flowthrough separators on a routine basis.
12) Use commercial car washes when vehicle or equipment washing cannot be performed onsite without causing impacts to stormwater.
13) If washing must occur onsite and outdoors, use a designated impervious area that is marked with posted signs indicating proper washing procedures. This area must be bermed to contain the wash water and graded to direct the wash water to the sanitary sewer, an oil-water separator, a holding tank, a dead-end sump, or other containment area. Captured water shall be disposed of properly.
14) Avoid steam cleaning and engine/undercarriage washing which can produce high pollutant concentrations. If steam cleaning or engine washing is necessary, perform such cleanings within isolated indoor areas, and ensure wash water is treated and discharged to the sanitary sewer (if permitted to do so) or captured for off-site disposal.
15) Train staff in proper washing techniques and how to confine washing to designated wash areas.
16) Consider alternatives to washing such as using air to blow grass and debris from small equipment, wet-wiping equipment with rags, etc.

BMP Fact Sheet

MATERIAL STORAGE

GH-06

Not Applicable ☐ Applicable ☒

CONCERN

The storage of petroleum products, chemicals, paints, cleaners, pesticides, fertilizers, bags of erodible materials like sand, cement, and soil, and other potential pollutants can negatively impact surface waters through the accidental releases or leaching of materials into stormwater. Unprotected outdoor storage areas can generate a wide range of stormwater pollutants, such as sediment, nutrients, toxic materials, and petroleum products.

POLLUTION PREVENTION MEASURES

1) Whenever possible, store containers (e.g. drums, bins, bags, cans, and totes) indoors or under cover to limit exposure to stormwater.
2) Designate specific areas for material delivery and storage that are away from heavy traffic areas, storm drains, stormwater conveyances, and areas of concentrated run-off.
3) Designated outdoor storage areas should be paved or consist of an impervious surface.
4) Provide secondary containment for materials whenever possible or required per regulation.
5) Store materials on pallets to prevent stormwater run-on from coming into contact with materials, prevent container corrosion, and allow for better leak detection. Pallets must be in good condition and promptly replaced once damaged or deteriorated.
6) Stack containers according to the manufacturer's recommendations to avoid damage.
7) Immediately replace damaged, corroded, or leaking containers.
8) Ensure all storage containers are clearly labeled with their contents.
9) Keep containers tightly sealed after use.
10) Maintain an accurate inventory of hazardous substances and limit on-site storage to that which is necessary to support facility operations.
11) Keep storage areas neat and well organized; remove debris and unneeded material promptly.
12) If empty drums are stored outdoors, ensure that all openings are equipped with caps to prevent water intrusion and that the drum/storage area is labeled "Empty Drums".
13) Have an adequate supply of appropriate spill response equipment readily available and clean up all spills and releases immediately utilizing dry cleaning techniques (e.g. sweeping/absorbents).
14) Clean up all migrating dry materials upon discovery and address the source of the release.
15) Provide perimeter controls (e.g., berms, rock check dams, etc.) for erodible stockpiles of materials such as mulch, sand, and gravel to prevent migration into the stormwater system.
16) Routinely inspect material storage areas for leaks, material migration, and damaged or corroded containers. Ensure that secondary containment and other perimeter controls are in satisfactory condition.
17) Additional visual inspections of outdoor storage areas should be conducted after significant rainfall events (i.e., greater than 0.5 inches).

BMP Fact Sheet

ABOVEGROUND STORAGE TANKS

GH-07

Not Applicable ☒ Applicable ☐

CONCERN

Aboveground storage tanks (ASTs) may be used to store fuels, automotive fluids, chemicals, or deicing fluids. Leaks from tanks, piping, or other equipment and releases during fluid transfers can all impact stormwater quality. It is critical to maintain ASTs in good working condition to prevent spills and/or releases from occurring. Improperly managed storage tanks can cause significant environmental impacts.

POLLUTION PREVENTION MEASURES

General *(applicable to all storage tanks)*

1) ASTs should be installed and maintained in accordance with COMAR 26.10 and applicable fire codes.
2) ASTs should be provided with secondary containment, whenever feasible or required by regulation.
3) Secondary containment areas shall be maintained clean and dry; drain valves must be kept closed; accumulated liquid shall only be discharged if there are no visible signs of impacts, and in accordance with applicable regulations.
4) Inspect ASTs monthly to identify any leaking or malfunctioning equipment and ensure tanks are functioning as designed.
5) ASTs shall be equipped with a form of liquid-level detection (i.e. sight gauge, electronic monitoring).
6) ASTs shall be equipped with overfill prevention (i.e. overfill alarm and/or overfill prevention valve).
7) Tanks and piping should be protected from vehicle impact via barriers, bollards, guard rails, etc.
8) Install ASTs on solid foundations over impervious surfaces, and away from areas of concentrated run-off, storm drains, and other stormwater conveyances.
9) Properly label all storage tanks (e.g., contents, capacity, etc.).
10) Keep remote fills and fill port spill buckets clean and dry.
11) Keep fill ports, gates, and tank areas secured when not in use to prevent fuel theft and tampering.
12) Have an adequate supply of appropriate spill response equipment readily available and clean up all spills and leaks immediately utilizing dry cleaning techniques (e.g. absorbents and brooms).
13) Facilities that maintain 1,320 gallons or more of aboveground oil products shall prepare and implement a Spill Prevention, Control, and Countermeasure (SPCC) Plan, per 40 CFR 112.
14) Facilities that maintain 1,000 gallons or more of used oil or 10,000 gallons or more of virgin oil in ASTs shall obtain an Individual Oil Operations Permit from the MDE, per COMAR 26.10.01.09.
15) Owners/Operators of facilities that maintain more than 2,500 gallons of oil in ASTs are required to register each AST with MDE, per COMAR 26.10.01.10.

Bulk Fluid Transfers (Deliveries)

1) All bulk fluid transfer operations shall be performed under the direct supervision of knowledgeable County personnel. At no time shall the delivery vehicle or delivery vehicle operator be unsupervised.
2) The product level within the tank must be measured and available capacity verified before delivery.
3) Deliveries shall be made via fill ports equipped with catch basins to capture drips and spills.
4) Ensure an adequate supply of appropriate spill response equipment is readily available.
5) Post signs in delivery area displaying proper delivery procedures and emergency contact information.

ABOVEGROUND STORAGE TANKS

Used Oil Tanks

1) County personnel must verify the level of product in used oil tanks prior to filling.
2) Used oil tanks should only be filled via designated fill ports. Pumping used oil into the tank via a closed piping system is preferred to manually pouring used oil into the tank.

Brine Tanks

1) If multiple tanks are located onsite, the tanks should be plumbed to ensure that the complete failure of one tank will not drain all the tanks in the system (tanks must be isolated).
2) Minimize seeping and leaking at fittings by properly supporting piping and fittings, using flexible connectors or hoses to reduce stress, and installing corrosion-resistant fittings.
3) Consider placing hoses in non-permeable trenches or using drip-less nozzles to reduce repeated small spills.

RESIDENT DROP-OFF CENTER

GH-08

Not Applicable ☒ Applicable ☐

CONCERN

Resident Drop-Off Centers are publicly accessible facilities where residents can drop off used automotive fluids (i.e. oil or antifreeze), municipal waste, recyclable, and/or organic waste, typically free of charge. Improper transfer or management of the waste materials can allow a number of pollutants including oils and greases, toxic and chemical compounds, nutrients, metals, and other wastes to enter waterways.

POLLUTION PREVENTION MEASURES

General *(applicable to all materials collected)*

1) Clearly identify waste materials accepted by the facility, and clearly mark designated collection areas.
2) Waste material should be inspected by a County representative, prior to disposal.
3) Avoid positioning waste receptacles near storm drains, water bodies, or areas of concentrated runoff.
4) When practical, receiving areas should be covered.
5) Do not allow containers to overflow or waste materials to accumulate on the ground.

Automotive Fluid Collection

1) Used oil, antifreeze, and automotive fluid receiving areas should be on impervious surfaces, covered, and provided with secondary containment, which shall be maintained clean and dry.
2) Provide lidded waste receptacles in the receiving area for the public to dispose of empty containers. Waste receptacles shall be emptied routinely and waste disposed of properly.
3) Collection areas shall be inspected daily and all trash and spilled liquids appropriately cleaned up.
4) The available capacity of waste liquid collection containers shall be routinely verified and waste removals scheduled, as needed.
5) Install appropriate controls to prohibit the overfilling of waste fluid collection containers.
6) Place appropriate spill response equipment in close proximity to drop-off areas.
7) If aboveground tanks are used to collect waste fluids, refer to BMP Fact Sheet GHP-07 (Aboveground Storage Tanks) for additional recommendations.

Organic Debris Collection

1) Routinely transfer collected organic debris/waste to a composting or disposal facility.
2) Do not permit composting of organic waste except at properly designed and permitted facilities.
3) Enact controls to prevent leaves and other windblown debris from entering stormwater inlets.

Municipal Waste / Recyclables Collection

1) Refer to BMP Fact Sheet GHP-01 (Waste Management) for additional recommendations.

BMP Fact Sheet

STOCKPILES

GH-09

Not Applicable ☒ Applicable ☐

CONCERN

The County may stockpile various erodible materials, the type of material can vary depending on the needs of the County. Stockpiled material may include soil, sand, millings, slag, cinders, sawdust, landscaping bark, compost, etc. Exposed stockpiles can easily erode due to wind or precipitation and contribute suspended solids to stormwater runoff.

POLLUTION PREVENTION MEASURES

1) Maintain stockpiles of erodible materials within roofed storage buildings or covered storage bins, if feasible. If not, stockpile material on an impervious surface and cover the stockpile.
2) Temporary stockpiles should be placed on an impermeable membrane (tarp) for quick clean-up.
3) Locate stockpiles away from drain inlets, catch basins, swales, areas of concentrated stormwater flow, water bodies, and environmentally sensitive areas.
4) Divert stormwater flows away from/around the stockpiles using a diversion device (e.g., temporary swale, berm, sandbags, or diversion fence).
5) Cover temporary stockpiles of erodible materials with a tarp that has been adequately secured. The covers must be in place at all times when the stockpile is not in active use.
6) When accessing a portion of the stockpile, only remove a section of the cover to minimize exposure to the elements.
7) Use barriers to isolate stockpiled materials from high-traffic areas to prevent tracking of materials.
8) Sweep (do not wash or hose down) in front of material stockpile storage areas at regular intervals, following loading and unloading activities, and during times of heavy use.
9) If material is observed migrating from the stockpile, clean up all migrated material upon discovery and provide additional controls to reduce migration from the stockpile. If such measures are ineffective implement controls to capture pollutants before they migrate off-site (e.g. silt fencing, inlet filters, filter socks, at-grade inlet protection, etc.).
10) Minimize material stockpile inventory based on historical inventory/usage records and public safety operational needs.
11) Cold mix asphalt shall be stored on and covered with plastic sheeting or comparable material.
12) Routinely inspect outdoor material stockpiles to verify existing controls are functioning properly and for signs of erosion or material transport.

BMP Fact Sheet

DEICING MATERIALS

GH-10

Not Applicable ☒ Applicable ☐

CONCERN

When salt and other de-icing materials are stored outside and uncovered, they have a much higher risk of being eroded and transported offsite by stormwater. Improper de-icing material and sand storage may result in stormwater runoff containing elevated concentrations of sodium chloride and dissolved solids. Sodium chloride (e.g., road salt) is an effective deicer but can be highly corrosive to stormwater facilities. Smaller waterways are at a higher risk to increases in salinity, which can threaten aquatic species. Additionally, runoff containing sodium chloride has the potential to reach drinking water sources where small traces can adversely impact public health.

POLLUTION PREVENTION MEASURES

1) Bagged de-icing chemicals must be stored indoors. If stored outdoors bags must be kept on pallets (off the ground) and covered at all times. Bags must be intact without holes or openings.
2) Bulk de-icing materials shall be stored under cover and on an impervious surface.
3) Bulk salt storage areas/buildings shall not be overfilled so that salt spills out beyond the entrance of the storage area/building.
4) Bulk salt storage areas/buildings shall be maintained in a structurally sound condition and in a way that prevents the release of salt and the infiltration of stormwater. Deicing materials should not touch the sides of metal storage containers.
5) Barriers such as berms, gates, knee walls, tarps, and/or straw bales shall be placed at the entrances of bulk salt storage areas/buildings to prohibit the migration of salt and prevent contact with precipitation/stormwater runoff.
6) Routinely inspect storage areas for migrating materials or deterioration of containment structures. Sweep up all migrating materials upon discovery and repair the source of the migrating pollutant.
7) Loading areas should be constructed of impervious material and covered or enclosed, to the extent practical, to reduce potential contact with stormwater.
8) Minimize the distance de-icing materials are transported during loading/unloading activities.
9) Prevent and/or minimize the spillage of salt and de-icing materials during loading/unloading activities, immediately clean spilled or tracked materials.
10) Sweeping of storage and loading/unloading areas shall be conducted immediately following loading/unloading activities.
11) Do not store de-icing materials (bulk or bagged) over or immediately adjacent to drains or waterways.
12) Control site drainage by diverting stormwater run-on away from storage/loading areas using appropriate measures (e.g., curbing, berms, etc.).
13) Slope storage/loading areas to direct salt-contaminated runoff to an appropriate collection area, and in a manner that prevents the runoff from reaching adjacent soil or surface waters.
14) Excess salt shall be removed from salt handling equipment (trucks, spreaders, etc.) following use/prior to storage. All cleaning shall occur on an impervious surface, which is sloped or curbed to contain any washwater and direct it to a collection area for recycling or proper disposal.

Appendix A

GHP Site Inspection Checklist

GOOD HOUSEKEEPING PLAN (GHP)
SITE INSPECTION CHECKLIST

Facility Name: _____ **Inspection Date:** _____

Inspector Name: _____ **Inspector Signature:** _____

- The intent of this inspection is to ensure that the site is being properly maintained and that there are no visible signs of pollutants entering the stormwater system.
- **A shaded status box designates an item in a non-compliant status. Please provide an explanation for all non-compliant items and subsequently document all corrective actions performed.**
- Retain the completed checklists for five (5) years.

Item	Status			CORRECTIVE ACTIONS/COMMENTS *Items which cannot be corrected immediately must be reported to the GHP/NPDES Program Manager*
	Yes	No	N/A	
GENERAL HOUSEKEEPING				
1. Are exterior areas of the facility free of accumulated trash, debris, and unneeded materials?				
2. Are stormwater drains and inlets free from debris, sediment, and evidence of spills/releases?				
3. Is the facility free from signs of erosion?				
4. Are paved surfaces free of accumulated sediment?				
5. Is spill response equipment available in maintenance areas, fueling areas, hazardous material storage areas, and/or other required areas?				
6. Are spill kits and absorbent materials clearly labeled and accessible (i.e. items are not piled on top of or in front of spill kits)?				
7. Are spill kits secured from being stolen or misused?				
8. Is there a labeled container present for the disposal of used spill cleanup material?				

GOOD HOUSEKEEPING PLAN (GHP)
SITE INSPECTION CHECKLIST

Item	Status			CORRECTIVE ACTIONS/COMMENTS *Items which cannot be corrected immediately must be reported to the GHP/NPDES Program Manager*
	Yes	No	N/A	
9. Does spill response equipment (i.e. spill kits, absorbent materials) need to be replenished?				
WASTE MANAGEMENT				
10. Are areas around solid waste containers/roll-offs/compactors free of excessive trash accumulation or overflowing containers?				
11. Are areas around solid waste containers/roll-offs/compactors free of visible evidence (i.e. leaks, staining) of ongoing stormwater pollution?				
12. Are scrap metal containers in good order and free from evidence of leaking oil/grease?				
13. For dumpsters, roll-offs, and other waste receptacles, where leaks are observed, have appropriate controls (e.g. containment, spill response, etc.) been enacted?				
14. Are the lids (if present) to solid waste containers closed?				
15. Is street sweeping/vactor waste being managed appropriately (i.e. no evidence of material migration)?				
16. Is waste cooking grease managed appropriately (i.e. no evidence of spilled material or excessive staining)?				
VEHICLE & EQUIPMENT STORAGE				
17. Are stored vehicles/equipment free from leaks?				
18. If leaks are present, are they being managed appropriately (drip pan or other methods in place to capture released liquids)?				
19. Are storage areas free of visible evidence of chronic leaks/spills (i.e. significant staining)?				

GOOD HOUSEKEEPING PLAN (GHP)
SITE INSPECTION CHECKLIST

Item	Status			CORRECTIVE ACTIONS/COMMENTS *Items which cannot be corrected immediately must be reported to the GHP/NPDES Program Manager*
	Yes	No	N/A	
VEHICLE & EQUIPMENT REFUELING				
20. Are the areas around refueling areas free from evidence of spills or leaks?				
21. Are refueling areas free of used absorbent material that has not been swept/cleaned up?				
22. Do fuel dispensers and hoses appear to be in good working order and well-maintained?				
VEHICLE MAINTENANCE				
23. Is there any indication that vehicle maintenance activities are being conducted outdoors?				
24. Is there any indication that vehicle maintenance activities are contributing to stormwater pollution?				
VEHICLE & EQUIPMENT WASHING				
25. If performed on-site, does all vehicle/equipment washing occur indoors?				
26. Is wash water collected and disposed of properly?				
27. Is there any indication that vehicle/equipment wash water is being released to stormwater conveyances or pervious areas?				
MATERIAL STORAGE				
28. Are all outdoor storage areas free from visible signs of leaks or spilled material?				
29. Are material storage containers in good condition?				

GOOD HOUSEKEEPING PLAN (GHP)
SITE INSPECTION CHECKLIST

Item	Status			CORRECTIVE ACTIONS/COMMENTS *Items which cannot be corrected immediately must be reported to the GHP/NPDES Program Manager*
	Yes	No	N/A	
30. Are drums, totes, and other containers (that are <u>not</u> empty) stored off the ground and covered, or stored indoors?				
31. Are liquid-containing drums/totes located outdoors provided with secondary containment?				
32. Are containers that are located outdoors equipped with closed lids except when material transfers are occurring?				
33. Are materials, which could impact stormwater, stored away from heavy traffic areas, or protected from vehicle collisions?				
34. Are chemical storage containers properly labeled?				
35. If empty drums are stored outside, are all openings equipped with caps to prevent water intrusion?				
ABOVEGROUND STORAGE TANKS				
36. Are all storage tanks, and surrounding areas free from visible signs of leaks or spilled material?				
37. Do storage tanks appear to be in good working order (e.g. free of obvious signs of damage or malfunctioning equipment)?				
38. Are remote fills associated with tanks free of liquid and debris?				
RESIDENT DROP-OFF CENTERS				
39. Are waste collection areas clearly identified?				
40. Are used oil/antifreeze collection tanks, containment structures, and surrounding areas free from visible signs of leaks or spilled material?				

GOOD HOUSEKEEPING PLAN (GHP)
SITE INSPECTION CHECKLIST

Item	Status			CORRECTIVE ACTIONS/COMMENTS *Items which cannot be corrected immediately must be reported to the GHP/NPDES Program Manager*
	Yes	No	N/A	
41. Do used oil/antifreeze collection tanks appear to be in good working order (e.g. free of obvious signs of damage or malfunctioning equipment)?				
42. Are empty used oil/antifreeze containers being collected and disposed of in the trash?				
43. Are areas around waste/recyclables containers free of excessive trash accumulation or overflowing containers?				
44. Are areas around waste/recyclables containers free of visible evidence (i.e. leaks, staining) of ongoing stormwater pollution?				
45. Are organic debris collection areas free of visible evidence of ongoing stormwater pollution (e.g. leaves and debris in stormwater conveyances)?				
STOCKPILES				
46. Are material piles, including salt, soil, sand, and millings isolated (i.e. covered, bermed, etc.) to prevent stormwater run-on and run-off?				
47. Are areas surrounding material piles (e.g. salt, soil, sand, millings, etc.) free of tracked or migrated material?				
DEICING MATERIALS				
48. Are all deicing materials stored indoors or undercover?				
49. Are salt storage structures in good condition (e.g. no evidence of material escaping or stormwater infiltration)?				
50. Is the salt loading area clean?				

GOOD HOUSEKEEPING PLAN (GHP)
SITE INSPECTION CHECKLIST

Item	Status			CORRECTIVE ACTIONS/COMMENTS *Items which cannot be corrected immediately must be reported to the GHP/NPDES Program Manager*
	Yes	No	N/A	
51. If deicing materials are tarped, is the tarp secure and covering the entire pile?				
52. Are bags of salt stored indoors, or off the ground and covered?				

ADDITIONAL COMMENTS:

Appendix B

GHP Stormwater Conveyance System Inspection Checklist

GOOD HOUSEKEEPING PLAN (GHP)
STORMWATER CONVEYANCE SYSTEM INSPECTION CHECKLIST

Facility Name: _____ **Inspection Date:** _____

Inspector Name: _____ **Inspector Signature:** _____

- The intent of this inspection is to ensure the free flow of stormwater within on-site conveyance systems and prevent damage/flooding.
- **If maintenance is needed, please provide an explanation, and document all corrective actions performed.**
- **Inspections shall include visually accessible infrastructure only; at no time shall inspection personnel enter a confined space.**
- Retain the completed checklists for five (5) years.

Item	Item Checked (Y/N/NA)	Maintenance Needed (Y/N)	CORRECTIVE ACTIONS/COMMENTS *Items which cannot be corrected immediately must be reported to the GHP/NPDES Program Manager*
CATCH BASINS / INLETS			
1. Look for debris and sediment blocking catch basin grates. If found, remove.			
2. Look for damage or cracks to the frame, grate, basin walls or bottom. If found, schedule repairs or replacement.			
3. Look for sediment and debris in the catch basin sump. If sediment fills 60% of the sump or comes within 6” of a pipe it should be scheduled for cleaning.			
4. If any type of filtering device is present, verify that the filter is not clogged, torn, or damaged; clean if clogged, replace if damaged.			
PIPES / CULVERTS			
5. Look for evidence of clogged piping (e.g. visual obstructions, standing water within manholes/inlets structures, etc.). If found, remove or schedule cleaning.			
6. Verify vegetation growth, if present, does not impede water flow. If it does, mow, cut back, or remove.			

GOOD HOUSEKEEPING PLAN (GHP)
STORMWATER CONVEYANCE SYSTEM INSPECTION CHECKLIST

Item	Item Checked (Y/N/NA)	Maintenance Needed (Y/N)	CORRECTIVE ACTIONS/COMMENTS *Items which cannot be corrected immediately must be reported to the GHP/NPDES Program Manager*
7. Inspect for damaged piping, inlets, outlets, headwalls, wingwalls, or excessive erosion. If found, make or schedule repairs.			
DITCHES / TRAPEZOIDAL SWALES			
8. Check for erosion, slumping, or undercutting. If found, make or schedule repairs.			
9. Look for trash and sediment accumulation. Remove all trash and remove sediment if it will impede water flow or clog downstream structures.			
10. Verify vegetation growth does not impede water flow. If it does, mow, cut back, or remove. Remove any trees or shrubs growing within the ditch.			
11. Check the integrity of check dams, filter socks, or other flow dissipation/filtering devices within the ditch or swale. Perform or schedule service if they are clogged, damaged, or deteriorated.			
12. Check inlets and outlets for debris accumulation, damage, or erosion. If found, make or schedule repairs.			

ADDITIONAL COMMENTS:

GUIDANCE DOCUMENT
GOOD HOUSEKEEPING PLAN - STORMWATER CONVEYANCE INSPECTIONS

INTRODUCTION

Maintaining catch basins, stormwater inlets, and other stormwater conveyance structures on a regular basis will remove pollutants, prevent backups, and ensure the system functions as intended to avoid flooding.

Each GHP-covered facility is required to conduct routine stormwater conveyance system inspections to ensure the free flow of stormwater within the conveyance system(s). The GHP includes a *"GHP Stormwater Conveyance System Inspection Checklist"*, to be used when completing the required inspections. This document provides additional background and guidance to aid facility personnel in completing the inspections.

CATCH BASINS / INLETS

Catch basins and inlets are all points for stormwater to enter storm drain systems. These structures are typically part of a larger conveyance system with many interconnected components where the impairment of one component can compromise the functionality of the larger system. Inlets and catch basins are subject to functional impairment by a variety of conditions, including:

- Structural damage including from vehicles and plows
- Cracks/joint separation at piping (inlet and outlet) connections
- Leaking due to cracks and joint separation
- Missing or damaged grates and grate frames
- Corrosion
- Blockage caused by debris, sediment, vegetation, or other objects

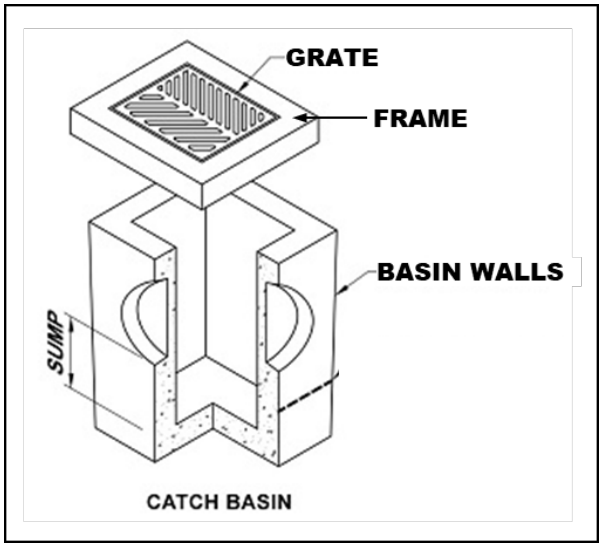

Figure 1 – Catch Basin Diagram

The following photos provide additional information related to the various inspection items, including examples of typical issues that may be encountered. The photo numbers correspond to the inspection checklist item number.

Inspection Item #1 [1]



Debris and sediment blocking inlet/catch basin grate.

Inspection Item #2 [2]



Damaged Grate

Inspection Item #2 [3]



Damaged Frame

Inspection Item #2 [4]



Failing brick walls with a stormwater inlet.

Inspection Item #2 [5]



Failing asphalt surrounding the inlet

[1] Grand Valley State University - https://www.gvsu.edu/groundswell/clogged-storm-drains-71.htm
[2] Georgia Department of Transportation – Stormwater System Inspection and Maintenance Manual, March 2020
[3] https://catchbasinauthority.ca/catch-basin-101/
[4] https://www.fixasphalt.com/catch-basin-repairs
[5] https://ccpia.org/catch-basin-and-manhole-inspections/

Inspection Item #3 [6]



Sediment and debris inside stormwater inlet

Inspection Item #3

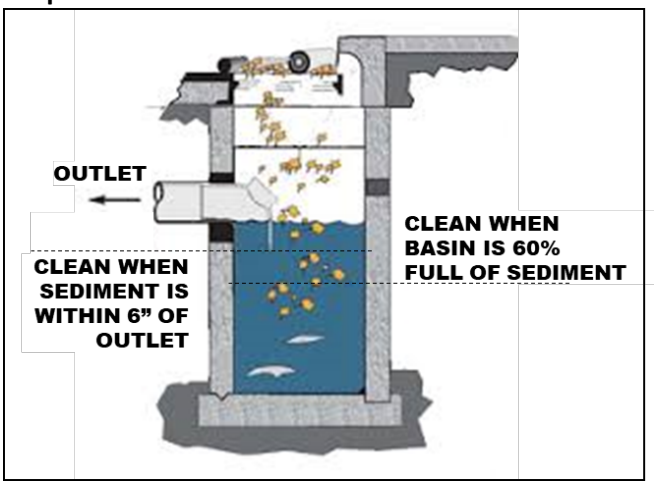

Remove sediment from a catch basin if it fills 60% of the sump or comes within 6" of a pipe.

Inspection Item #4 [7]



Example of inlet filter. Replace when filled or damaged.

Inspection Item #4 [8]



Example of an inlet filter sock, replace if damaged.

PIPES AND CULVERTS

Pipe systems are designed to convey stormwater runoff safely and effectively from inlets to various discharge points and outfalls. A culvert is a structure that channels water under an obstacle such as a roadway or railroad. These structures are subject to functional impairment by a variety of conditions, including:

- Blockage or obstruction due to build up of vegetation, debris, sediment, or other objects
- Cracks and/or joint separation
- Collapsed pipe
- Corrosion
- Root intrusion
- Lack of stabilization

[6] https://www.fixasphalt.com/catch-basin-repairs
[7] https://store.interstateproducts.com/products/Ultra-Drain-Guards/Ultra-Drain-Guard-Adjustable-Frame-Model
[8] https://www.newpig.com/pig-sediment-filter-sock/p/FLT787

Inspection Item #5 [9]



A pipe filled with sediment, inhibiting flow.

Inspection Item #5 [10]



Standing water around an inlet may indicate a blockage.

Inspection Item #6 [11]



Pipe conveyance filled with vegetation.

Inspection Item #7 [12]

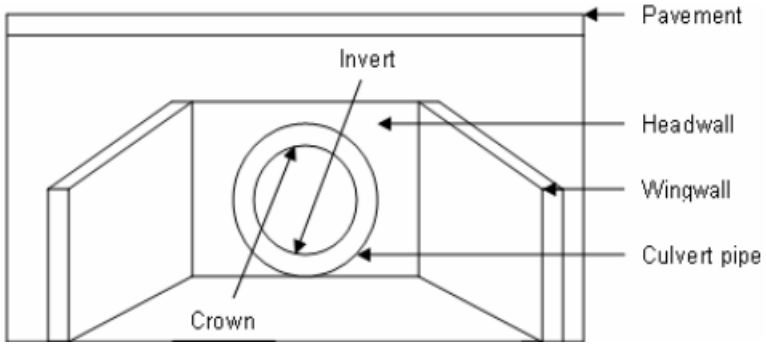

Diagram depicting various components of a culvert.

[9] Georgia Department of Transportation – Stormwater System Inspection and Maintenance Manual, March 2020
[10] https://www3.epa.gov/region9/water/npdes/stormwater-feature.html
[11] Georgia Department of Transportation – Stormwater System Inspection and Maintenance Manual, March 2020
[12] https://www.researchgate.net/figure/Components-of-a-Culvert_fig34_228685906

Inspection Item #7 [13]



A crack is the culvert headwall.

Inspection Item #7 [14]



Evidence of erosion around a culvert.

DITCHES AND SWALES

Ditches and swales serve similar functions. Both are used to convey stormwater. However, there are slight differences. A ditch is a narrow channel typically found along roads and at the edges of parking lots/driveways. A swale is like a ditch, but it is broad and shallow, and usually covered or lined with turfgrass or stone. Issues associated with these structures, which could impede their function include:

- Blockage or obstruction due to vegetation, debris, sediment, or other objects
- Erosion
- Rapidly moving water
- Lack of adequate vegetative cover for grass-lined channels

Inspection Item #8 [15]



Erosion and slumping within a drainage ditch.

Inspection Item #8 [16]



Slumping within a drainage swale.

[13] https://www.sbt-durabi.org/articles/xml/ARN0/
[14] https://lufkindailynews.com/news/local/culverts-crumbling-in-precinct-1/article_a9fed902-4379-5248-ab11-7471e2974298.html
[15] https://graniteseed.com/blog/how-to-stop-a-ditch-from-eroding/
[16] https://www.mnwcd.org/erosion-control

Inspection Item #9 [17]



Litter and debris within a ditch.

Inspection Item #9 [18]



Litter and debris within a swale.

Inspection Item #10 [19]



Cracks and joint separation in concrete channels, removal of vegetation may prevent future damage.

Inspection Item #11 [20]



Rock check dam across a channel.

Inspection Item #11 [21]



Filter sock check dams across a grass swale.

[17] https://craven.ces.ncsu.edu/2023/02/for-those-who-love-to-litter/
[18] https://www.cityoftulsa.org/government/departments/public-works/stormwater-quality/adopt-a-stream/
[19] Georgia Department of Transportation – Stormwater System Inspection and Maintenance Manual, March 2020
[20] EPA Stormwater Best Management Practice, Check Dams, December 2021
[21] EPA Stormwater Best Management Practice, Check Dams, December 2021

Inspection Item #12 [22]



Inlet to a rock-lined swale.

Inspection Item #12 [23]



Sediment accumulation at swale inlet.

END OF DOCUMENT

[22] https://www.stormwater.com/erosion-control/vegetation-management/article/13016118/inlet-protection-during-constructionand-after

[23] https://www.stormwater.com/erosion-control/vegetation-management/article/13016118/inlet-protection-during-constructionand-after

Appendix C

General Spill Response Procedures

SPILL RESPONSE AND NOTIFICATION PROCEDURES

A. Discovery of a Spill

1. Upon discovery of a spill, facility personnel should immediately assess the situation and determine if the spill is considered a "Minor" or "Major" spill. For a spill to be considered "Minor" all the following conditions must be satisfied:

    - ❖ The type of material spilled is known;
    - ❖ The spill is confined to the immediate work area;
    - ❖ The spill has not reached storm drains, sanitary sewer systems, open water, or surrounding soils;
    - ❖ The spill can be safely managed;
    - ❖ The employee can contain and clean up the spill with the PPE that is normally used in the work area;
    - ❖ The spill does not pose a serious threat of fire or an explosion; and
    - ❖ The spill does not pose conditions that are immediately dangerous to life or health.

2. If all the above conditions are met, the spill is considered "Minor". Refer to ***Section B*** of this document for appropriate response actions.

3. If all the above conditions are not met, then the spill is considered "Major". Refer to ***Section C*** of this document for appropriate response actions.

4. If a spill involves flammable liquids, ignitable vapors may be present - precautions must be taken to prevent ignition. Do not turn on or off equipment since sparks may be generated. Additionally, avoid the movement of equipment that could create static electricity. Larger spills of flammable liquids could pose a fire threat and would be considered a "Major" spill. Refer to ***Section C*** for appropriate actions.

B. Response to a "Minor" Spill

1. Identify the source of the spill and the direction in which the spill is heading.

2. Attempt to stop the spill at the source. Where applicable, the source of the spill shall be taken out of service until repairs can be made. If the spill is related to a fuel dispensing system, activate the Emergency Shut-Off (ESO) switch to prevent additional fuel disbursements.

3. If material is released outside a containment area, it is crucial that the material be contained as quickly as possible. Following proper safety procedures, use absorbent materials or diking to contain the spill. Prevent the spill from reaching storm drains, sanitary sewers, or open water. If a spill is flowing toward a drain, install temporary diking around the drain, block off the drain with a drain cover, or place absorbent material around the drain to prevent a discharge.

4. Once the spill has been stopped and contained, estimate the quantity of the spill. Consult applicable Safety Data Sheet (SDS) for material compatibility and environmental precautions. Note and follow recommendations regarding special precautions, spill response equipment, methods, or precautions. All cleanup work shall be conducted in accordance with existing safety protocols and SDS recommendations. Contact the facility Superintendent/Supervisor, or designee, for assistance if needed.

5. Recover or clean up the spilled material as much as possible. Material that cannot be reused must be discarded in accordance with state and federal regulations. Liquids absorbed by porous materials (e.g., wood, gravel, significant quantities of absorbent material, etc.) shall be placed into US DOT-approved 30-gallon or 55-gallon steel drums. Following cleanup, the container shall be secured and appropriately labeled to identify the contents and the date of the spill/cleanup. Containers shall be stored indoors and provided with secondary containment until transported off-site for disposal.

6. For spills that do not involve flammable liquids or other potential hazardous wastes, small quantities of used absorbent materials may be double bagged and disposed of along with municipal trash as long as all liquids have been absorbed (no free liquid may be present).

7. If the spilled material is a flammable liquid, corrosive liquid (pH ≤ 2 or ≥ 12.5), or other potential hazardous waste, all recovered product, impacted material, and used absorbent must be placed into a US DOT-approved containers/drums. Following cleanup, the container(s) shall be secured and appropriately labeled to identify the contents and the date of the spill/cleanup. Containers shall be stored indoors and provided with secondary containment until transported off-site for disposal. The facility Superintendent/ Supervisor, or designee shall be notified that a potential hazardous waste was released and that a waste characterization may be needed to facilitate proper disposal.

8. Surfaces that are contaminated by the spill shall be cleaned utilizing dry absorbent material. Tools and equipment that have been used in the cleanup must be decontaminated immediately after use. Decontamination water (if used) must be minimized, containerized, and disposed of properly.

9. If waste requires disposal, notify the facility Superintendent/Supervisor, or designee who will arrange for the proper characterization and disposal of any waste material. Representative sampling and analysis may be necessary to properly characterize the waste. The waste must be transported and disposed of in compliance with all applicable laws and regulations. Waste manifests, trip tickets, or bills of lading (if required) for waste disposal shall be kept on file.

10. Facility personnel shall restock/replace spill response equipment and absorbent materials used during the clean-up efforts.

11. The facility Superintendent/Supervisor, designee, or other appropriate County personnel shall be notified of the spill in accordance with ***Section D*** of this document.

C. Response to "Major" Spill

A "Major" spill is any discharge that does not meet the definition of a "Minor" spill. Any employee or contractor observing, being involved with, or recognizing a potential or actual spill of oil or other hazardous material, other than a "Minor" spill is responsible for performing the following actions:

1. If there is no danger to human health, attempt to stop and contain the spill at the source. If the spilled material is unknown, if PPE other than that which is typically used in your work area, is necessary to approach the spill area, or if assistance is required to stop the spill, do not attempt to contain the spill. If the spill is related to a fuel dispensing system, activate the Emergency Shut-Off (ESO) switch.

2. Most County employees lack the appropriate training to respond to "Major" spills. If the spill is of an unknown substance, is of a quantity that cannot be safely managed, or poses other risks beyond the training level of the employee, the employee should not attempt to contain or clean up the spill.

3. Evacuate individuals from the area and keep personnel away from the impacted area.

4. Immediately notify the facility Superintendent/Supervisor, or designee of the incident. The notified individual will determine the need for further evacuations and contact emergency response personnel (911), as necessary. *If a situation represents an immediate and grave danger to personnel, the public, structures, or other infrastructure, the individual discovering the incident may call 911 directly without first notifying facility management.*

5. The facility Superintendent/Supervisor or designee will determine if assistance from emergency response contractors is required to clean up the incident and will coordinate such spill response efforts with spill response contractors and other County agencies and first responders.

6. Facility personnel will provide assistance to emergency responders, as appropriate.

D. Reporting a Spill (Internal Notifications)

1. Once a spill is contained and cleanup operations have been initiated, the individual discovering the spill shall notify the appropriate County representatives and provide the following information:

    a) Identify the location, date, and time of the incident;
    b) Identify the type of material spilled or discharged;
    c) Estimate the quantity spilled and the rate of the spill;
    d) Identify the cause of the spill or discharge;
    e) Identify impacted media or infrastructure (soil, storm drains, open water bodies, etc.);
    f) Determine the extent of injuries involved; and
    g) Provide response measures implemented by the facility personnel.

E. Reporting a Spill (Regulatory Notifications)

State of Maryland Reporting Requirements (COMAR 26.10.01.05)

1. Upon discovery of a spill, the Responsible Person shall notify the MDE Emergency Response Division **within two (2) hours** by calling 866-633-4686. The caller shall be prepared to provide the following information:

    a) The time and date of the spill;
    b) The location and cause of the spill;
    c) The mode of transportation or type of facility involved;
    d) Type and quantity of oil spilled;
    e) Details regarding any assistance required;
    f) The name, address, and telephone number of the person making the report; and
    g) Any other pertinent information requested by the Department.

2. MDE will provide further guidance on additional responsibilities.

3. Within **ten (10) working days** of the completed removal and clean-up activities, the Responsible Person shall prepare a report using either County letterhead detailing the incident. The report shall contain the following:

    a) Date, time, and place of the spill;
    b) The amount and type of oil or hazardous substance spilled;
    c) A complete description of circumstances that contributed to the spill;
    d) A complete description of the containment and removal operations performed, including disposal sites to which oil refuse was transported;
    e) Procedures, methods, and precautions instituted to prevent the recurrence of an oil spill from the facility involved;
    f) Any other information considered necessary or required by the MDE for a complete description of the incident; and
    g) A certification that the information provided is true and correct to the knowledge of the person signing the report.

4. The completed report shall be submitted to mdeerd.mema@maryland.gov or faxed to 410-537-3932.

5. A digital copy of the completed report and any accompanying documentation shall be retained

Federal Reporting Requirements - National Response Center (40 CFR 110)

1. If any of the following criteria are met the Responsible Person shall notify the National Response Center (NRC) **within two (2) hours** of the spill discovery by calling 800-424-8802 or 202-426-2675.

    - ❖ The spill has caused a film, sheen, or discoloration of the surface water or shorelines;
    - ❖ The material spilled will violate applicable water quality standards (surface water or groundwater); or
    - ❖ The spill has caused a sludge or emulsion to be deposited beneath the surface of the water or on the shoreline.

2. At a minimum, the following information shall be provided to the NRC:

    a) Name, organization, and telephone number of reporting party;
    b) Name and address of the responsible party;
    c) Date, time, and location of the incident;
    d) Source and cause of the discharge;
    e) Type of material(s) discharged;
    f) Quantity of materials discharged;
    g) Danger or threat posed by discharge;
    h) Number and types of injuries (if any);
    i) Weather conditions at the incident location; and
    j) Other information to help emergency personnel respond to the incident.

3. If unable to report to the NRC, reports can be made to the EPA Regional Office at 800-438-2474 or the U.S. Coast Guard (USCG) at 202-372-1001. The NRC, EPA, or USCG will provide further guidance.

4. A digital record of the NRC notification and any accompanying documentation shall be retained on-site.

Federal Reporting Requirements - EPA Regional Administrator (40 CFR 112.4)

1. If the facility where the spill occurred is regulated under 40 CFR 112 and is required to have a Spill Prevention, Control, and Countermeasures (SPCC) Plan, the Responsible Person shall report the spill to the EPA Region III Administrator when any of the following criteria are met:

   - More than 1,000 gallons of oil is discharged to navigable waters or adjoining shorelines in a single incident; or
   - More than 42 gallons of oil is discharged to navigable waters or adjoining shorelines in each of two incidents occurring within any twelve-month period.

2. The report shall be made in writing **within 60 days** of the spill and shall contain:

   a) Name and location of the facility;
   b) Owner/operator name;
   c) Maximum storage/handling capacity of the facility and normal daily throughput;
   d) Corrective actions and countermeasures taken;
   e) Adequate description of the facility including maps, and flow diagrams;
   f) Cause of the discharge to navigable waters, including a failure analysis;
   g) Additional preventative measures taken or planned to minimize discharge reoccurrence; and
   h) Other information required by the EPA Regional III Administrator.

3. The report shall be submitted to the EPA Regional Administrator at the following address:

   EPA Regional Administrator
   US EPA Region 3
   1650 Arch Street (3RA00)
   Philadelphia, PA 19103-2029

4. A copy of the report shall be retained in the facility SPCC Plan.

Appendix D

Training Records

GOOD HOUSEKEEPING PLAN (GHP)
TRAINING ATTENDANCE LOG

FACILITY NAME: _____

DATE	NAME *(PRINT)*	SIGNATURE

By signing I affirm that I have completed the required annual training; and I am aware of and understand my responsibilities under this Plan.

GOOD HOUSEKEEPING PLAN (GHP)

Edgewood High School
2415 Willoughby Beach Road
Edgewood, MD 21040

June 30, 2025

TABLE OF CONTENTS

1.0 BACKGROUND & INTRODUCTION 1
1.1 Objectives 1
1.2 Potential Stormwater Pollutants 1
2.0 RESPONSIBILITIES 3
2.1 GHP Implementation 3
2.2 Plan Review and Modification 3
2.3 Inspections 3
2.3.1 GHP Site Inspections 3
2.3.2 Conveyance System Inspections 4
2.4 Training 4
3.0 BEST MANAGEMENT PRACTICES (BMPs) 5
3.1 Applicability of BMP Fact Sheets 5
3.2 BMP Fact Sheets 5

List of Tables

TABLE 1-1 POTENTIAL STORMWATER POLLUTANTS AND THEIR SOURCES 2

List of BMP Fact Sheets

GH-01 - Waste Management
GH-02 - Vehicle and Equipment Storage
GH-03 - Vehicle/Equipment Refueling
GH-04 - Vehicle Maintenance
GH-05 - Vehicle/Equipment Washing
GH-06 - Material Storage
GH-07 - Aboveground Storage Tanks
GH-08 - Resident Drop-Off Centers
GH-09 - Stockpiles
GH-10 - Deicing Materials

Appendices

Appendix A: GHP Site Inspection Checklist
Appendix B: GHP Stormwater Conveyance Inspection Checklist
Appendix C: General Spill Response Procedures
Appendix D: Training Records

List of Acronyms

AST	-	Aboveground Storage Tank
BMP	-	Best Management Practice
CFR	-	Code of Federal Regulations
GHP	-	Good Housekeeping Plan
MDE	-	Maryland Department of the Environment
MS4	-	Municipal Separate Storm Sewer System
NPDES	-	National Pollutant Discharge Elimination System
SPCC	-	Spill Prevention, Control, and Countermeasure Plan

1.0 BACKGROUND & INTRODUCTION

Polluted stormwater runoff has the potential to enter the County's storm sewer systems (referred to as a municipal separate storm sewer system or MS4), and then discharge, untreated, into local water bodies. To address this potential stormwater pollution, the County is required to obtain a NPDES permit from the Maryland Department of the Environment (MDE). The NPDES Permit requires the County to take actions to prevent stormwater pollution, maintain storm sewer systems, monitor stormwater discharges, and develop and implement comprehensive management programs to minimize the discharge of pollutants from the storm sewer system.

To comply with Part IV.D.4.b of the County's Phase I MS4 Permit, the County must develop, implement, and maintain a Good Housekeeping Plan (GHP) for certain County-owned properties not required to be covered under Maryland's General Permit for Discharges from Stormwater Associated with Industrial Activities *(General Permit 12-SWA / 20-SW).*

To support this effort, a *"Good Housekeeping Plan Applicability Certification"* has been developed to evaluate and document if a specific County-owned facility is subject to the GHP requirements. The *"GHP Applicability Certification"* includes the following ten (10) potential stormwater polluting activities. If any of the covered activities are performed at the facility, then that facility is required to implement a site-specific GHP. The GHP will include each of the potential stormwater polluting activities identified in the *"GHP Applicability Certification"* and corresponding pollution prevention procedures.

- Waste Management
- Vehicle and Equipment Storage
- Vehicle/Equipment Refueling
- Vehicle Maintenance
- Vehicle/Equipment Washing
- Material Storage
- Aboveground Storage Tanks
- Resident Drop-Off Center
- Stockpiles
- Deicing Materials

1.1 Objectives

The GHP was developed to outline suitable practices, procedures, and protocols, or Best Management Practices ("BMPs") for reducing and/or preventing stormwater pollution associated with operations at covered County-owned properties. The intent of the pollution prevention procedures included in the GHP is to limit the release of materials with the potential to impact stormwater, this includes reducing or eliminating (to the extent practical):

- The occurrence of spills and leaks;
- The accidental dumping or release of materials;
- The accumulation of waste, trash, debris, unused parts/equipment, etc.;
- The exposure of hazardous materials to precipitation/run-off;
- Stormwater run-off contamination by improperly stored materials; and/or
- Illicit discharges to the storm drain system.

1.2 Potential Stormwater Pollutants

Table 1-1 on the following page provides a list of common potential pollutants that may result from the GHP-regulated activities identified above. Understanding the sources of these pollutants can help in achieving the goals and objectives of the GHP program.

TABLE 1-1 POTENTIAL STORMWATER POLLUTANTS AND THEIR SOURCES

		Waste Management	Vehicle/Equipment Storage	Vehicle/Equipment Refueling	Vehicle Maintenance	Vehicle/Equipment Washing	Material Storage	Aboveground Storage Tanks	Resident Drop-Off Center	Stockpiles	Deicing Materials
Pollutants	**Sources**	**Associated GHP Activity**									
Sediment	Land disturbance; erosion; paved surfaces; material stockpiles; waste storage; salt/abrasive application	X				X	X		X	X	X
Hydrocarbons *(petroleum compounds)*	Leaking vehicle and equipment; vehicle and equipment cleaning; spills; improper storage; maintenance activities; scrap metal disposal; improper disposal	X	X	X	X	X	X	X	X		
Metals	Vehicle brake and tire wear; vehicle/equipment exhaust; batteries; galvanized metal; paint and wood preservatives; fuels, pesticides, and cleaners; vehicle fueling, maintenance, and washing; industrial waste	X	X	X	X	X	X	X	X		
Toxic Chemicals	Pesticide application; improper chemical storage; leaks and spills from storage containers; leaking vehicles; maintenance activities	X	X		X	X	X	X	X		
Chlorides	De-Icing chemicals										X
Trash/Debris	Improper waste storage and disposal; leaking trash containers; littering; poor housekeeping	X	X				X		X		
Nutrients (nitrogen and Phosphorus)	Fertilizers; malfunctioning septic systems; sewer overflows; animal/pet waste; vehicle washing; decaying grass and leaves; leaking trash containers; atmospheric deposition	X				X	X		X		

2.0 RESPONSIBILITIES

2.1 GHP Implementation

A separate GHP is required for each covered facility. The following individual *(identified by name and/or title)* is accountable for the administration and implementation of the GHP at this facility and has the authority to commit the necessary resources to implement this Plan.

_____

Name and/or Title of Responsible Person

The Responsible Person listed above shall ensure that facility personnel involved in any GHP-covered activities identified in this Plan, are provided with access to, and are familiar with, the contents of this Plan.

2.2 Plan Review and Modification

The *"GHP Applicability Certification"* completed for this facility must be reviewed and updated once every permit term, or within one (1) year of substantial changes to a facility's operations that could reasonably contribute to stormwater pollution. Any newly constructed/acquired facility must be assessed within one (1) year of initiating operations at the facility. The facility's GHP must be amended and reissued to the facility within one (1) year of any changes to the facility's *"GHP Applicability Certification"*.

When warranted, the BMP Fact Sheets provided in Section 3.0 may need to be updated or revised. At the same time, additional BMP Facts Sheets may be added. The need for such updates or modifications will be at the discretion of the County's GHP Program Administrator.

2.3 Inspections

The County's MS4 permit requires each facility covered by a GHP to have the following:

1. Written procedures for annually assessing County properties to prevent the discharge of pollutants, spills, and leaks into the County's storm sewer system; and

2. Written procedure for performing stormwater conveyance system inspections and for removing debris that may cause clogging, backups, and flooding.

To meet these requirements, each facility that is covered by a GHP will be required to complete routine site inspections and stormwater conveyance system inspections as detailed below. Facility management will be responsible for ensuring the necessary inspections are completed within the required timeframes, that corrective actions (if needed) are performed, and that records of inspections and completed corrective actions are maintained for at least five (5) years.

2.3.1 GHP Site Inspections

The GHP Site Inspection will be performed to ensure that each GHP-covered facility is being properly maintained and that there are no visible signs of pollutants entering the stormwater system. GHP facilities shall utilize the *"GHP Site Inspection Checklist"*, provided in ***Appendix A*** to complete the required inspection. At a minimum, each facility is to be inspected every five (5) years.

2.3.2 Conveyance System Inspections

Stormwater conveyance systems are generally comprised of curbs and gutters, catch basins, inlet structures, swales, channels, piping, culverts, detention ponds, outfalls, or other structures that are used to collect, contain, and convey stormwater runoff.

The unimpeded movement of stormwater through conveyance systems is critical in avoiding backups and flooding, which can impede facility operations and damage property. Routine inspections and preventative care of stormwater conveyance systems can ensure these systems function as intended and prevent the need for costly and time-consuming repairs and retrofits.

Each GHP-covered facility is required to conduct routine stormwater conveyance system inspections to ensure the free flow of stormwater within the conveyance systems. GHP-covered facilities shall utilize the *"GHP Stormwater Conveyance System Inspection Checklist"*, provided in ***Appendix B*** to complete the required inspections. At a minimum, facility conveyance system inspections are to be conducted every five (5) years.

2.4 Training

As part of the GHP requirements within the County's Phase I NPDES permit, annual training must be provided to all appropriate staff and contractors. Such training shall be provided to any individuals responsible for implementing the GHP, performing the required inspections, or involved in any of the GHP-covered activities identified in this Plan. The required training shall focus on the duties and responsibilities assigned to site personnel in implementing the GHP and the best management practices (BMPs) prescribed in this Plan for preventing, reducing, and eliminating the discharge of pollutants during facility activities.

The County's MS4/GHP Program Coordinator will be responsible for developing the required training and disseminating it to GHP-covered facilities. Each GHP-covered facility will be responsible for identifying staff/contractors who must attend annual training, ensuring identified staff complete the required training, and maintaining records that document training dates and attendees. Training records and other documentation shall be maintained in ***Appendix D*** of this Plan.

3.0 BEST MANAGEMENT PRACTICES (BMPs)

This section contains a BMP Fact Sheet for each of the ten (10) GHP-regulated activities. The County's operations are not limited to the BMPs contained within this document; nor is the County required to implement all of the pollution prevention measures identified within each BMP Fact Sheet. The County should select and implement those measures that are applicable and have the greatest potential for reducing stormwater pollution.

The BMP Fact Sheets contained within this document offer recommended protocols for a particular activity. These pollution prevention measures are considered non-structural BMPs with a focus on source control of potential pollutants.

3.1 Applicability of BMP Fact Sheets

The *"GHP Applicability Certification"* completed for this facility has identified the activities conducted at this facility that require coverage under this Plan. Each of the BMP Fact Sheets shall be marked as to whether they are applicable or not applicable to this facility. The Applicable/Not Applicable indicator on each BMP Fact Sheet can be revised in response to changes in operations at the facility.

3.2 BMP Fact Sheets

BMP Fact Sheets can be found on the following pages. For the sake of consistency, the general outline of a BMP Fact Sheet will be as follows:

- Identification of GHP-covered activity.
- Applicability of the BMP Fact Sheet to the facility.
- A general description of the concern the activity poses to stormwater.
- Recommended pollution prevention measures for reducing/eliminating stormwater pollution.
- Additional sources of information, if applicable.

BMP Fact Sheet

WASTE MANAGEMENT

GH-01

Not Applicable ☒ Applicable ☐

CONCERN

Improperly managed waste can allow trash and debris to be washed into storm drains which poses a concern to water quality, marine life, and public health. It also has the potential to create obstructions in the drainage system, which can lead to backups and flooding. Additionally, improper storage and handling of waste materials can allow pollutants including oils and greases, toxic and chemical compounds (including nutrients), bacteria, metals, and other potentially hazardous wastes to enter waterways.

POLLUTION PREVENTION MEASURES

General *(applicable to all waste management activities)*

1) Provide suitable containers, preferably with working covers, to collect waste materials.
2) Ensure that appropriate waste containers are available in areas where waste is generated.
3) Provide a cover over waste storage areas, if feasible.
4) Avoid positioning waste receptacles near storm drains, water bodies, or areas of concentrated runoff.
5) Ensure that lids to waste containers *(if present)* are kept closed to prevent the intrusion of precipitation and prevent trash from blowing out of the receptacle.
6) For waste receptacles, which do not have lids and could leak, containers should be inspected regularly and controls (e.g., containment, spill response, etc.) shall be enacted whenever leaks or dry-weather discharges are observed.
7) Routinely inspect waste containers, roll-offs, compactors, and other waste receptacles for the presence of excessive waste accumulation and overflowing containers.
8) Ensure that wastes accumulating on the ground are placed in a suitable waste container.
9) Ensure that wastes are removed from the facility regularly by a licensed and contracted vendor.
10) Repair or replace damaged waste container lids.

Trash Compactors

1) Routinely inspect trash compactors for malfunctioning equipment or leaking hydraulic oil and provide the appropriate spill response if leaking equipment is encountered.
2) Regularly inspect compactors for leaking fluids and implement appropriate controls such as spill response/cleanup, collection or diversion of released fluids, providing secondary containment, etc. whenever leaks or dry-weather discharges are observed.

Scrap Metal Collection Containers

1) Avoid placing oily or grease-covered items in uncovered scrap metal recycling collection containers. If needed, wrap oily/greasy items in plastic garbage bags before placing them in the collection container.

Hazardous/Universal Wastes

1) Ensure that hazardous waste and universal wastes (e.g., batteries, bulbs, etc.) are collected and stored indoors or within covered collection containers.
2) Verify that hazardous/universal waste collection containers are in good condition, not leaking, and compatible with the wastes being stored.

Street Sweeping / Vactor Truck Material Storage

1) Do not site storage areas near storm drains, open water bodies, or areas of concentrated runoff.
2) Install sediment control devices (e.g. silt fence, silt socks, hay bales, etc.) around the staging area. Inspect these controls regularly and replace them as needed.
3) Cover the materials staging area, if feasible.
4) Provide oil-absorbent booms if necessary to control oily discharge. Inspect and replace booms regularly.
5) The staging area should be checked periodically for evidence of sediment migrating outside of the staging area. Material that has migrated out of the staging area should be promptly swept and returned to the staging area or disposed of.

Waste Cooking Oil/Grease

1) Maintain storage containers indoors or within a covered location, if feasible.
2) Storage containers shall be secured to prevent infiltration of precipitation and accidental/intentional spills or releases.
3) Carefully transfer waste oil/grease to the appropriate collection container to avoid spills.
4) Maintain suitable spill response equipment near collection containers. Immediately clean up any spilled oil/grease. Keep the exterior of the collection container clean and free of spilled oil/grease.
5) Provide secondary containment for collection containers, if feasible.

BMP Fact Sheet

VEHICLE AND EQUIPMENT STORAGE

GH-02

Not Applicable ☒ Applicable ☐

CONCERN

Vehicles and equipment may be stored onsite to support various County operations (e.g., construction, maintenance, snow removal, roadside assistance, mass transit, mowing, etc.). Examples of County owned and operated vehicles and equipment stored onsite at any given time include but are not limited to, the following: cars, trucks, buses, emergency response vehicles, garbage trucks, heavy equipment (backhoes, frontend loaders, etc.), forklifts, towable generators, portable light stands, and roadside equipment. Vehicle and equipment storage is considered a pollutant source due to the potential for incidental releases of petroleum products, lubricants, and various automotive fluids.

POLLUTION PREVENTION MEASURES

1) When possible/practical, store vehicles and equipment inside or under cover to prevent exposure to precipitation.
2) If vehicles or equipment must be stored outside, store vehicles/equipment in designated areas away from areas of concentrated runoff, storm drains, and other stormwater conveyances.
3) Vehicles and equipment shall be staged on impervious (asphalt or concrete) surfaces;
4) Keep truck beds clean and ensure potential stormwater pollutants are stored in closed containers, covered, or otherwise protected from stormwater exposure.
5) Conduct routine visual inspections of vehicles and equipment for the presence of leaks and respond accordingly.
6) Leaking vehicles/equipment should be moved inside or under cover. At a minimum, drip pans or absorbent pads shall be used to contain the leak until the vehicle/equipment can be relocated and the leak addressed.
7) Drain all fluids from wrecked or heavily damaged vehicles and equipment before storage.
8) Have an adequate supply of appropriate spill response equipment readily available and clean up all spills and leaks immediately utilizing dry cleaning techniques (e.g. absorbents and brooms).
9) Train staff in spill response so that incidents are addressed in a timely fashion.
10) Do not wash down areas where leaks have collected on ground surfaces; use dry cleaning methods such as granular absorbents and brooms.

VEHICLE AND EQUIPMENT REFUELING

Not Applicable ☒ Applicable ☐

CONCERN

Refueling activities associated with County vehicles and equipment can result in a discharge of fuel (gasoline and diesel fuel), which has the potential to enter the storm drain system and/or a nearby waterway. Such releases can introduce hydrocarbons, metals, and other toxic chemicals to stormwater runoff.

POLLUTION PREVENTION MEASURES

General Procedures *(applicable to all refueling activities)*

1) Routinely *(at least daily)* inspect the fuel dispensing area for any spills or leaks.
2) Routinely inspect fuel dispensing equipment looking for leaking or damaged equipment. Damaged or malfunctioning equipment shall be taken out of service until it has been repaired.
3) Fuels will only be dispensed into authorized vehicles, equipment, and approved containers.
4) Vehicle operators must remain outside of their vehicles and in attendance of fuel dispensers at all times while dispensing fuel.
5) Third-party contractors must be trained in proper refueling procedures and pollution prevention.
6) Do not utilize a foreign object to keep the dispenser nozzle in the open position. If present, a "hold-open" latch on the nozzle may be used.
7) Do not "top off" a vehicle's fuel tank once the dispenser nozzle's automatic shut-off has been activated. Topping off tanks may result in spills. Post signs in fueling areas warning vehicle operators against "topping off" of vehicle fuel tanks.
8) After refueling has stopped, allow several seconds to pass before removing the nozzle and returning it to the dispenser. This will prevent incidental dripping from the nozzle.
9) Employees refueling vehicles shall note the location of the "Emergency Fuel Shut Off" switch, to be used to stop the flow of fuel to the dispensers in the event of a release or emergency.
10) Have an adequate supply of appropriate spill response equipment readily available and clean up all spills immediately utilizing dry cleaning techniques (e.g. absorbents and brooms).
11) Immediately clean up and dispose of used absorbent material.
12) Do not wash down fueling areas; use dry cleaning methods such as granular absorbents and brooms.
13) Conduct refueling activities over impervious (e.g. concrete) surfaces. Place drip pans or absorbent pads under the nozzle if fueling occurs over a permeable surface such as grass or soil.
14) Install oil control devices in storm drains that may receive contaminated runoff from fueling areas.
15) Cover fueling areas with a canopy or roof to prevent direct contact with rainfall. Direct run-on away from fueling areas and collect fueling area run-off in a dead-end sump or oil-water separator.

Mobile Equipment Refueling

1) Refuel equipment on an impervious surface, downgradient of, and at the farthest practical distance from any storm drain, stormwater conveyance, stormwater management feature, or waterway.
2) Utilize secondary containment when refueling equipment (when practical).
3) Ensure mobile refuelers are parked in designated locations and away from areas of concentrated run-off, storm drains, and other stormwater conveyances.
4) Ensure that procedures are in place and that staff is properly trained in spill response/cleanup so that leaks and spills are addressed appropriately and promptly.

BMP Fact Sheet

VEHICLE MAINTENANCE

GH-04

Not Applicable ☒ Applicable ☐

CONCERN

Vehicle and equipment maintenance can impact the water quality of nearby waterways by exposing stormwater to various pollutants including petroleum hydrocarbons, solvents, antifreeze/coolants, used oil, lubricating oil, grease, brake fluid, metals, and various chemicals. Additionally, vehicles that are wrecked or awaiting repair can be a source of pollution if leaking fluids are not properly controlled.

POLLUTION PREVENTION MEASURES

1) Conduct vehicle and equipment maintenance activities indoors.
2) Make sure incoming vehicles and equipment are inspected for leaking fluids and oil.
3) Move leaking vehicles or equipment indoors or under cover as soon as possible. At a minimum, a drip pan or absorbent pads shall be utilized to contain the leak until the vehicle/equipment can be relocated and the leak addressed.
4) Avoid performing maintenance on vehicles in close proximity to exterior doorways, which may allow released fluids to migrate outdoors.
5) Have an adequate supply of appropriate spill response equipment readily available and clean up all spills and leaks immediately utilizing dry cleaning techniques (e.g. absorbents and brooms).
6) Keep maintenance areas neat and well organized. Remove dirt, debris, and used absorbent regularly.
7) Inspect maintenance areas as well as maintenance equipment on a routine basis.
8) Store vehicles, parts, and generated wastes indoors or off the ground and under cover whenever possible. When practical, provide secondary containment.
9) Promptly transfer used fluids to the proper waste container; do not leave full drip pans or other open containers around the shop. Empty and clean drip pans and containers regularly.
10) Waste liquids shall not be poured into floor drains, sinks, outdoor storm drain inlets, or other storm drains or sewer connections. Liquid wastes are to be collected in properly labeled containers and disposed of by a licensed waste hauler or other appropriate method.
11) Store leaking batteries in a sealed container and provide secondary containment, if feasible.
12) Clean all parts indoors utilizing a self-contained parts washer.
13) Do not hose down indoor service areas to storm drains or areas where it can seep into groundwater.
14) Maintain floor drains in good working order and inspect for proper function on a routine basis. Consider plugging floor drains that discharge to the storm sewer.
15) Ensure oil/water separators (if present) are maintained in proper working order and are checked on a routine basis for the presence of oil.
16) If maintenance work must be performed outdoors, adhere to the following requirements:
    - Conduct maintenance activities over an impervious surface, away from stormwater inlets.
    - Cover outdoor maintenance areas and direct stormwater run-on away from the area.
    - Use drip pans or drop cloths underneath the equipment to catch leaks and drips.
    - Have an adequate supply of appropriate spill response equipment readily available.
    - Clean all spills immediately using dry cleaning techniques (e.g. absorbents and brooms).
    - Avoid performing maintenance activities during precipitation events.
    - Limit temporary outdoor maintenance activities to a single shift/day if additional time is needed to cover the work area at the end of each day/shift.

VEHICLE AND EQUIPMENT WASHING

Not Applicable ☒ Applicable ☐

CONCERN

Vehicle and equipment washing can generate washwater that contains oil, grease, organic compounds, surfactants, phosphates, metals, and suspended solids. If vehicles/equipment are washed outdoors on impervious surfaces, dirty washwater can contaminate stormwater that ends up in waterways. Washing equipment over pervious surfaces can allow washwater to seep into the ground contaminating groundwater.

POLLUTION PREVENTION MEASURES

1) Vehicle and equipment washing should only be conducted in designated indoor wash bays that capture and recycle washwater to the extent practical.
2) Wastewater from the washing facility should be discharged to the sanitary sewer system under the authorization of a wastewater discharge permit issued by the local municipal authority.
3) The floor of indoor vehicle wash bays should be completely bermed or sloped to collect wash water and prevent migration outdoors.
4) No other activities (e.g., fluid changes, repairs, material storage) shall be performed in wash areas.
5) Keep the wash bay neat and well organized. Sweep or pick up all trash and debris daily or as needed.
6) Solid materials accumulated on vehicles or in vehicle beds (e.g. salt, soil, grass, etc.) shall be knocked off or otherwise removed from the vehicle (while inside the wash bay) prior to washing. Solid materials shall be collected and disposed of properly.
7) For vehicles too large to completely fit in the wash bays, only the portion of the vehicle physically located in the confines of the wash bay shall be cleaned. The vehicle shall then be rotated to allow for the remaining portion of the vehicle to be washed.
8) Use nozzles that automatically turn off water when not in use and consider high-pressure, low-volume sprays.
9) Avoid detergents as much as possible. If detergents are necessary, use a biodegradable, phosphate-free detergent.
10) If discharging to an oil-water separator, use a non-emulsifying detergent.
11) Inspect floor drain systems, holding tanks, and conveyances associated with designated wash areas regularly. Maintain oil/water separators and/or process flowthrough separators on a routine basis.
12) Use commercial car washes when vehicle or equipment washing cannot be performed onsite without causing impacts to stormwater.
13) If washing must occur onsite and outdoors, use a designated impervious area that is marked with posted signs indicating proper washing procedures. This area must be bermed to contain the wash water and graded to direct the wash water to the sanitary sewer, an oil-water separator, a holding tank, a dead-end sump, or other containment area. Captured water shall be disposed of properly.
14) Avoid steam cleaning and engine/undercarriage washing which can produce high pollutant concentrations. If steam cleaning or engine washing is necessary, perform such cleanings within isolated indoor areas, and ensure wash water is treated and discharged to the sanitary sewer (if permitted to do so) or captured for off-site disposal.
15) Train staff in proper washing techniques and how to confine washing to designated wash areas.
16) Consider alternatives to washing such as using air to blow grass and debris from small equipment, wet-wiping equipment with rags, etc.

BMP Fact Sheet

MATERIAL STORAGE

GH-06

Not Applicable ☒ Applicable ☐

CONCERN

The storage of petroleum products, chemicals, paints, cleaners, pesticides, fertilizers, bags of erodible materials like sand, cement, and soil, and other potential pollutants can negatively impact surface waters through the accidental releases or leaching of materials into stormwater. Unprotected outdoor storage areas can generate a wide range of stormwater pollutants, such as sediment, nutrients, toxic materials, and petroleum products.

POLLUTION PREVENTION MEASURES

1) Whenever possible, store containers (e.g. drums, bins, bags, cans, and totes) indoors or under cover to limit exposure to stormwater.
2) Designate specific areas for material delivery and storage that are away from heavy traffic areas, storm drains, stormwater conveyances, and areas of concentrated run-off.
3) Designated outdoor storage areas should be paved or consist of an impervious surface.
4) Provide secondary containment for materials whenever possible or required per regulation.
5) Store materials on pallets to prevent stormwater run-on from coming into contact with materials, prevent container corrosion, and allow for better leak detection. Pallets must be in good condition and promptly replaced once damaged or deteriorated.
6) Stack containers according to the manufacturer's recommendations to avoid damage.
7) Immediately replace damaged, corroded, or leaking containers.
8) Ensure all storage containers are clearly labeled with their contents.
9) Keep containers tightly sealed after use.
10) Maintain an accurate inventory of hazardous substances and limit on-site storage to that which is necessary to support facility operations.
11) Keep storage areas neat and well organized; remove debris and unneeded material promptly.
12) If empty drums are stored outdoors, ensure that all openings are equipped with caps to prevent water intrusion and that the drum/storage area is labeled "Empty Drums".
13) Have an adequate supply of appropriate spill response equipment readily available and clean up all spills and releases immediately utilizing dry cleaning techniques (e.g. sweeping/absorbents).
14) Clean up all migrating dry materials upon discovery and address the source of the release.
15) Provide perimeter controls (e.g., berms, rock check dams, etc.) for erodible stockpiles of materials such as mulch, sand, and gravel to prevent migration into the stormwater system.
16) Routinely inspect material storage areas for leaks, material migration, and damaged or corroded containers. Ensure that secondary containment and other perimeter controls are in satisfactory condition.
17) Additional visual inspections of outdoor storage areas should be conducted after significant rainfall events (i.e., greater than 0.5 inches).

BMP Fact Sheet

ABOVEGROUND STORAGE TANKS

GH-07

Not Applicable ☐ Applicable ☒

CONCERN

Aboveground storage tanks (ASTs) may be used to store fuels, automotive fluids, chemicals, or deicing fluids. Leaks from tanks, piping, or other equipment and releases during fluid transfers can all impact stormwater quality. It is critical to maintain ASTs in good working condition to prevent spills and/or releases from occurring. Improperly managed storage tanks can cause significant environmental impacts.

POLLUTION PREVENTION MEASURES

General *(applicable to all storage tanks)*

1) ASTs should be installed and maintained in accordance with COMAR 26.10 and applicable fire codes.
2) ASTs should be provided with secondary containment, whenever feasible or required by regulation.
3) Secondary containment areas shall be maintained clean and dry; drain valves must be kept closed; accumulated liquid shall only be discharged if there are no visible signs of impacts, and in accordance with applicable regulations.
4) Inspect ASTs monthly to identify any leaking or malfunctioning equipment and ensure tanks are functioning as designed.
5) ASTs shall be equipped with a form of liquid-level detection (i.e. sight gauge, electronic monitoring).
6) ASTs shall be equipped with overfill prevention (i.e. overfill alarm and/or overfill prevention valve).
7) Tanks and piping should be protected from vehicle impact via barriers, bollards, guard rails, etc.
8) Install ASTs on solid foundations over impervious surfaces, and away from areas of concentrated run-off, storm drains, and other stormwater conveyances.
9) Properly label all storage tanks (e.g., contents, capacity, etc.).
10) Keep remote fills and fill port spill buckets clean and dry.
11) Keep fill ports, gates, and tank areas secured when not in use to prevent fuel theft and tampering.
12) Have an adequate supply of appropriate spill response equipment readily available and clean up all spills and leaks immediately utilizing dry cleaning techniques (e.g. absorbents and brooms).
13) Facilities that maintain 1,320 gallons or more of aboveground oil products shall prepare and implement a Spill Prevention, Control, and Countermeasure (SPCC) Plan, per 40 CFR 112.
14) Facilities that maintain 1,000 gallons or more of used oil or 10,000 gallons or more of virgin oil in ASTs shall obtain an Individual Oil Operations Permit from the MDE, per COMAR 26.10.01.09.
15) Owners/Operators of facilities that maintain more than 2,500 gallons of oil in ASTs are required to register each AST with MDE, per COMAR 26.10.01.10.

Bulk Fluid Transfers (Deliveries)

1) All bulk fluid transfer operations shall be performed under the direct supervision of knowledgeable County personnel. At no time shall the delivery vehicle or delivery vehicle operator be unsupervised.
2) The product level within the tank must be measured and available capacity verified before delivery.
3) Deliveries shall be made via fill ports equipped with catch basins to capture drips and spills.
4) Ensure an adequate supply of appropriate spill response equipment is readily available.
5) Post signs in delivery area displaying proper delivery procedures and emergency contact information.

ABOVEGROUND STORAGE TANKS

Used Oil Tanks

1) County personnel must verify the level of product in used oil tanks prior to filling.
2) Used oil tanks should only be filled via designated fill ports. Pumping used oil into the tank via a closed piping system is preferred to manually pouring used oil into the tank.

Brine Tanks

1) If multiple tanks are located onsite, the tanks should be plumbed to ensure that the complete failure of one tank will not drain all the tanks in the system (tanks must be isolated).
2) Minimize seeping and leaking at fittings by properly supporting piping and fittings, using flexible connectors or hoses to reduce stress, and installing corrosion-resistant fittings.
3) Consider placing hoses in non-permeable trenches or using drip-less nozzles to reduce repeated small spills.

RESIDENT DROP-OFF CENTER

GH-08

Not Applicable ☒ Applicable ☐

CONCERN

Resident Drop-Off Centers are publicly accessible facilities where residents can drop off used automotive fluids (i.e. oil or antifreeze), municipal waste, recyclable, and/or organic waste, typically free of charge. Improper transfer or management of the waste materials can allow a number of pollutants including oils and greases, toxic and chemical compounds, nutrients, metals, and other wastes to enter waterways.

POLLUTION PREVENTION MEASURES

General *(applicable to all materials collected)*

1) Clearly identify waste materials accepted by the facility, and clearly mark designated collection areas.
2) Waste material should be inspected by a County representative, prior to disposal.
3) Avoid positioning waste receptacles near storm drains, water bodies, or areas of concentrated runoff.
4) When practical, receiving areas should be covered.
5) Do not allow containers to overflow or waste materials to accumulate on the ground.

Automotive Fluid Collection

1) Used oil, antifreeze, and automotive fluid receiving areas should be on impervious surfaces, covered, and provided with secondary containment, which shall be maintained clean and dry.
2) Provide lidded waste receptacles in the receiving area for the public to dispose of empty containers. Waste receptacles shall be emptied routinely and waste disposed of properly.
3) Collection areas shall be inspected daily and all trash and spilled liquids appropriately cleaned up.
4) The available capacity of waste liquid collection containers shall be routinely verified and waste removals scheduled, as needed.
5) Install appropriate controls to prohibit the overfilling of waste fluid collection containers.
6) Place appropriate spill response equipment in close proximity to drop-off areas.
7) If aboveground tanks are used to collect waste fluids, refer to BMP Fact Sheet GHP-07 (Aboveground Storage Tanks) for additional recommendations.

Organic Debris Collection

1) Routinely transfer collected organic debris/waste to a composting or disposal facility.
2) Do not permit composting of organic waste except at properly designed and permitted facilities.
3) Enact controls to prevent leaves and other windblown debris from entering stormwater inlets.

Municipal Waste / Recyclables Collection

1) Refer to BMP Fact Sheet GHP-01 (Waste Management) for additional recommendations.

BMP Fact Sheet

STOCKPILES

GH-09

Not Applicable ☒ Applicable ☐

CONCERN

The County may stockpile various erodible materials, the type of material can vary depending on the needs of the County. Stockpiled material may include soil, sand, millings, slag, cinders, sawdust, landscaping bark, compost, etc. Exposed stockpiles can easily erode due to wind or precipitation and contribute suspended solids to stormwater runoff.

POLLUTION PREVENTION MEASURES

1) Maintain stockpiles of erodible materials within roofed storage buildings or covered storage bins, if feasible. If not, stockpile material on an impervious surface and cover the stockpile.
2) Temporary stockpiles should be placed on an impermeable membrane (tarp) for quick clean-up.
3) Locate stockpiles away from drain inlets, catch basins, swales, areas of concentrated stormwater flow, water bodies, and environmentally sensitive areas.
4) Divert stormwater flows away from/around the stockpiles using a diversion device (e.g., temporary swale, berm, sandbags, or diversion fence).
5) Cover temporary stockpiles of erodible materials with a tarp that has been adequately secured. The covers must be in place at all times when the stockpile is not in active use.
6) When accessing a portion of the stockpile, only remove a section of the cover to minimize exposure to the elements.
7) Use barriers to isolate stockpiled materials from high-traffic areas to prevent tracking of materials.
8) Sweep (do not wash or hose down) in front of material stockpile storage areas at regular intervals, following loading and unloading activities, and during times of heavy use.
9) If material is observed migrating from the stockpile, clean up all migrated material upon discovery and provide additional controls to reduce migration from the stockpile. If such measures are ineffective implement controls to capture pollutants before they migrate off-site (e.g. silt fencing, inlet filters, filter socks, at-grade inlet protection, etc.).
10) Minimize material stockpile inventory based on historical inventory/usage records and public safety operational needs.
11) Cold mix asphalt shall be stored on and covered with plastic sheeting or comparable material.
12) Routinely inspect outdoor material stockpiles to verify existing controls are functioning properly and for signs of erosion or material transport.

BMP Fact Sheet

DEICING MATERIALS

GH-10

Not Applicable ☒ Applicable ☐

CONCERN

When salt and other de-icing materials are stored outside and uncovered, they have a much higher risk of being eroded and transported offsite by stormwater. Improper de-icing material and sand storage may result in stormwater runoff containing elevated concentrations of sodium chloride and dissolved solids. Sodium chloride (e.g., road salt) is an effective deicer but can be highly corrosive to stormwater facilities. Smaller waterways are at a higher risk to increases in salinity, which can threaten aquatic species. Additionally, runoff containing sodium chloride has the potential to reach drinking water sources where small traces can adversely impact public health.

POLLUTION PREVENTION MEASURES

1) Bagged de-icing chemicals must be stored indoors. If stored outdoors bags must be kept on pallets (off the ground) and covered at all times. Bags must be intact without holes or openings.
2) Bulk de-icing materials shall be stored under cover and on an impervious surface.
3) Bulk salt storage areas/buildings shall not be overfilled so that salt spills out beyond the entrance of the storage area/building.
4) Bulk salt storage areas/buildings shall be maintained in a structurally sound condition and in a way that prevents the release of salt and the infiltration of stormwater. Deicing materials should not touch the sides of metal storage containers.
5) Barriers such as berms, gates, knee walls, tarps, and/or straw bales shall be placed at the entrances of bulk salt storage areas/buildings to prohibit the migration of salt and prevent contact with precipitation/stormwater runoff.
6) Routinely inspect storage areas for migrating materials or deterioration of containment structures. Sweep up all migrating materials upon discovery and repair the source of the migrating pollutant.
7) Loading areas should be constructed of impervious material and covered or enclosed, to the extent practical, to reduce potential contact with stormwater.
8) Minimize the distance de-icing materials are transported during loading/unloading activities.
9) Prevent and/or minimize the spillage of salt and de-icing materials during loading/unloading activities, immediately clean spilled or tracked materials.
10) Sweeping of storage and loading/unloading areas shall be conducted immediately following loading/unloading activities.
11) Do not store de-icing materials (bulk or bagged) over or immediately adjacent to drains or waterways.
12) Control site drainage by diverting stormwater run-on away from storage/loading areas using appropriate measures (e.g., curbing, berms, etc.).
13) Slope storage/loading areas to direct salt-contaminated runoff to an appropriate collection area, and in a manner that prevents the runoff from reaching adjacent soil or surface waters.
14) Excess salt shall be removed from salt handling equipment (trucks, spreaders, etc.) following use/prior to storage. All cleaning shall occur on an impervious surface, which is sloped or curbed to contain any washwater and direct it to a collection area for recycling or proper disposal.

Appendix A

GHP Site Inspection Checklist

GOOD HOUSEKEEPING PLAN (GHP)
SITE INSPECTION CHECKLIST

Facility Name: _____ **Inspection Date:** _____

Inspector Name: _____ **Inspector Signature:** _____

- The intent of this inspection is to ensure that the site is being properly maintained and that there are no visible signs of pollutants entering the stormwater system.
- **A shaded status box designates an item in a non-compliant status. Please provide an explanation for all non-compliant items and subsequently document all corrective actions performed.**
- Retain the completed checklists for five (5) years.

Item	Status			CORRECTIVE ACTIONS/COMMENTS *Items which cannot be corrected immediately must be reported to the GHP/NPDES Program Manager*
	Yes	No	N/A	
GENERAL HOUSEKEEPING				
1. Are exterior areas of the facility free of accumulated trash, debris, and unneeded materials?				
2. Are stormwater drains and inlets free from debris, sediment, and evidence of spills/releases?				
3. Is the facility free from signs of erosion?				
4. Are paved surfaces free of accumulated sediment?				
5. Is spill response equipment available in maintenance areas, fueling areas, hazardous material storage areas, and/or other required areas?				
6. Are spill kits and absorbent materials clearly labeled and accessible (i.e. items are not piled on top of or in front of spill kits)?				
7. Are spill kits secured from being stolen or misused?				
8. Is there a labeled container present for the disposal of used spill cleanup material?				

GOOD HOUSEKEEPING PLAN (GHP)
SITE INSPECTION CHECKLIST

Item	Status			CORRECTIVE ACTIONS/COMMENTS *Items which cannot be corrected immediately must be reported to the GHP/NPDES Program Manager*
	Yes	No	N/A	
9. Does spill response equipment (i.e. spill kits, absorbent materials) need to be replenished?				
WASTE MANAGEMENT				
10. Are areas around solid waste containers/roll-offs/compactors free of excessive trash accumulation or overflowing containers?				
11. Are areas around solid waste containers/roll-offs/compactors free of visible evidence (i.e. leaks, staining) of ongoing stormwater pollution?				
12. Are scrap metal containers in good order and free from evidence of leaking oil/grease?				
13. For dumpsters, roll-offs, and other waste receptacles, where leaks are observed, have appropriate controls (e.g. containment, spill response, etc.) been enacted?				
14. Are the lids (if present) to solid waste containers closed?				
15. Is street sweeping/vactor waste being managed appropriately (i.e. no evidence of material migration)?				
16. Is waste cooking grease managed appropriately (i.e. no evidence of spilled material or excessive staining)?				
VEHICLE & EQUIPMENT STORAGE				
17. Are stored vehicles/equipment free from leaks?				
18. If leaks are present, are they being managed appropriately (drip pan or other methods in place to capture released liquids)?				
19. Are storage areas free of visible evidence of chronic leaks/spills (i.e. significant staining)?				

GOOD HOUSEKEEPING PLAN (GHP)
SITE INSPECTION CHECKLIST

Item	Status			CORRECTIVE ACTIONS/COMMENTS *Items which cannot be corrected immediately must be reported to the GHP/NPDES Program Manager*
	Yes	No	N/A	
VEHICLE & EQUIPMENT REFUELING				
20. Are the areas around refueling areas free from evidence of spills or leaks?				
21. Are refueling areas free of used absorbent material that has not been swept/cleaned up?				
22. Do fuel dispensers and hoses appear to be in good working order and well-maintained?				
VEHICLE MAINTENANCE				
23. Is there any indication that vehicle maintenance activities are being conducted outdoors?				
24. Is there any indication that vehicle maintenance activities are contributing to stormwater pollution?				
VEHICLE & EQUIPMENT WASHING				
25. If performed on-site, does all vehicle/equipment washing occur indoors?				
26. Is wash water collected and disposed of properly?				
27. Is there any indication that vehicle/equipment wash water is being released to stormwater conveyances or pervious areas?				
MATERIAL STORAGE				
28. Are all outdoor storage areas free from visible signs of leaks or spilled material?				
29. Are material storage containers in good condition?				

GOOD HOUSEKEEPING PLAN (GHP)
SITE INSPECTION CHECKLIST

Item	Status			CORRECTIVE ACTIONS/COMMENTS *Items which cannot be corrected immediately must be reported to the GHP/NPDES Program Manager*
	Yes	No	N/A	
30. Are drums, totes, and other containers (that are <u>not</u> empty) stored off the ground and covered, or stored indoors?				
31. Are liquid-containing drums/totes located outdoors provided with secondary containment?				
32. Are containers that are located outdoors equipped with closed lids except when material transfers are occurring?				
33. Are materials, which could impact stormwater, stored away from heavy traffic areas, or protected from vehicle collisions?				
34. Are chemical storage containers properly labeled?				
35. If empty drums are stored outside, are all openings equipped with caps to prevent water intrusion?				
ABOVEGROUND STORAGE TANKS				
36. Are all storage tanks, and surrounding areas free from visible signs of leaks or spilled material?				
37. Do storage tanks appear to be in good working order (e.g. free of obvious signs of damage or malfunctioning equipment)?				
38. Are remote fills associated with tanks free of liquid and debris?				
RESIDENT DROP-OFF CENTERS				
39. Are waste collection areas clearly identified?				
40. Are used oil/antifreeze collection tanks, containment structures, and surrounding areas free from visible signs of leaks or spilled material?				

GOOD HOUSEKEEPING PLAN (GHP)
SITE INSPECTION CHECKLIST

Item	Status			CORRECTIVE ACTIONS/COMMENTS *Items which cannot be corrected immediately must be reported to the GHP/NPDES Program Manager*
	Yes	No	N/A	
41. Do used oil/antifreeze collection tanks appear to be in good working order (e.g. free of obvious signs of damage or malfunctioning equipment)?				
42. Are empty used oil/antifreeze containers being collected and disposed of in the trash?				
43. Are areas around waste/recyclables containers free of excessive trash accumulation or overflowing containers?				
44. Are areas around waste/recyclables containers free of visible evidence (i.e. leaks, staining) of ongoing stormwater pollution?				
45. Are organic debris collection areas free of visible evidence of ongoing stormwater pollution (e.g. leaves and debris in stormwater conveyances)?				
STOCKPILES				
46. Are material piles, including salt, soil, sand, and millings isolated (i.e. covered, bermed, etc.) to prevent stormwater run-on and run-off?				
47. Are areas surrounding material piles (e.g. salt, soil, sand, millings, etc.) free of tracked or migrated material?				
DEICING MATERIALS				
48. Are all deicing materials stored indoors or undercover?				
49. Are salt storage structures in good condition (e.g. no evidence of material escaping or stormwater infiltration)?				
50. Is the salt loading area clean?				

GOOD HOUSEKEEPING PLAN (GHP)
SITE INSPECTION CHECKLIST

Item	Status			CORRECTIVE ACTIONS/COMMENTS *Items which cannot be corrected immediately must be reported to the GHP/NPDES Program Manager*
	Yes	No	N/A	
51. If deicing materials are tarped, is the tarp secure and covering the entire pile?				
52. Are bags of salt stored indoors, or off the ground and covered?				

ADDITIONAL COMMENTS:

Appendix B

GHP Stormwater Conveyance System Inspection Checklist

GOOD HOUSEKEEPING PLAN (GHP)
STORMWATER CONVEYANCE SYSTEM INSPECTION CHECKLIST

Facility Name: _____ **Inspection Date:** _____

Inspector Name: _____ **Inspector Signature:** _____

- The intent of this inspection is to ensure the free flow of stormwater within on-site conveyance systems and prevent damage/flooding.
- **If maintenance is needed, please provide an explanation, and document all corrective actions performed.**
- **Inspections shall include visually accessible infrastructure only; at no time shall inspection personnel enter a confined space.**
- Retain the completed checklists for five (5) years.

Item	Item Checked (Y/N/NA)	Maintenance Needed (Y/N)	CORRECTIVE ACTIONS/COMMENTS *Items which cannot be corrected immediately must be reported to the GHP/NPDES Program Manager*
CATCH BASINS / INLETS			
1. Look for debris and sediment blocking catch basin grates. If found, remove.			
2. Look for damage or cracks to the frame, grate, basin walls or bottom. If found, schedule repairs or replacement.			
3. Look for sediment and debris in the catch basin sump. If sediment fills 60% of the sump or comes within 6” of a pipe it should be scheduled for cleaning.			
4. If any type of filtering device is present, verify that the filter is not clogged, torn, or damaged; clean if clogged, replace if damaged.			
PIPES / CULVERTS			
5. Look for evidence of clogged piping (e.g. visual obstructions, standing water within manholes/inlets structures, etc.). If found, remove or schedule cleaning.			
6. Verify vegetation growth, if present, does not impede water flow. If it does, mow, cut back, or remove.			

GOOD HOUSEKEEPING PLAN (GHP)
STORMWATER CONVEYANCE SYSTEM INSPECTION CHECKLIST

Item	Item Checked (Y/N/NA)	Maintenance Needed (Y/N)	CORRECTIVE ACTIONS/COMMENTS *Items which cannot be corrected immediately must be reported to the GHP/NPDES Program Manager*
7. Inspect for damaged piping, inlets, outlets, headwalls, wingwalls, or excessive erosion. If found, make or schedule repairs.			
DITCHES / TRAPEZOIDAL SWALES			
8. Check for erosion, slumping, or undercutting. If found, make or schedule repairs.			
9. Look for trash and sediment accumulation. Remove all trash and remove sediment if it will impede water flow or clog downstream structures.			
10. Verify vegetation growth does not impede water flow. If it does, mow, cut back, or remove. Remove any trees or shrubs growing within the ditch.			
11. Check the integrity of check dams, filter socks, or other flow dissipation/filtering devices within the ditch or swale. Perform or schedule service if they are clogged, damaged, or deteriorated.			
12. Check inlets and outlets for debris accumulation, damage, or erosion. If found, make or schedule repairs.			

ADDITIONAL COMMENTS:

GUIDANCE DOCUMENT
GOOD HOUSEKEEPING PLAN - STORMWATER CONVEYANCE INSPECTIONS

INTRODUCTION

Maintaining catch basins, stormwater inlets, and other stormwater conveyance structures on a regular basis will remove pollutants, prevent backups, and ensure the system functions as intended to avoid flooding.

Each GHP-covered facility is required to conduct routine stormwater conveyance system inspections to ensure the free flow of stormwater within the conveyance system(s). The GHP includes a *"GHP Stormwater Conveyance System Inspection Checklist"*, to be used when completing the required inspections. This document provides additional background and guidance to aid facility personnel in completing the inspections.

CATCH BASINS / INLETS

Catch basins and inlets are all points for stormwater to enter storm drain systems. These structures are typically part of a larger conveyance system with many interconnected components where the impairment of one component can compromise the functionality of the larger system. Inlets and catch basins are subject to functional impairment by a variety of conditions, including:

- Structural damage including from vehicles and plows
- Cracks/joint separation at piping (inlet and outlet) connections
- Leaking due to cracks and joint separation
- Missing or damaged grates and grate frames
- Corrosion
- Blockage caused by debris, sediment, vegetation, or other objects

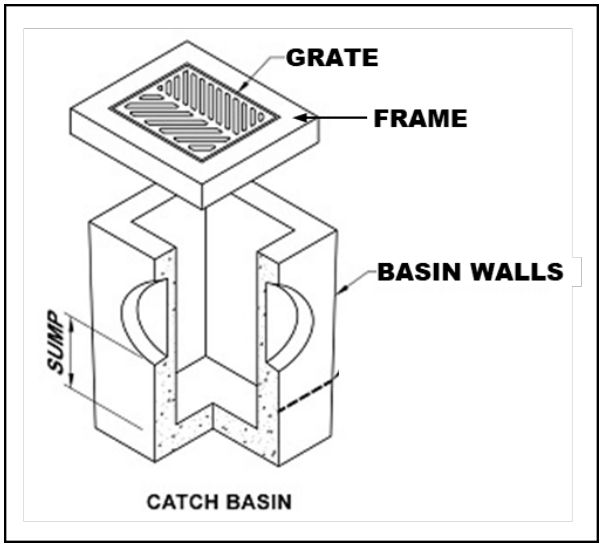

Figure 1 – Catch Basin Diagram

The following photos provide additional information related to the various inspection items, including examples of typical issues that may be encountered. The photo numbers correspond to the inspection checklist item number.

Inspection Item #1 [1]



Debris and sediment blocking inlet/catch basin grate.

Inspection Item #2 [2]



Damaged Grate

Inspection Item #2 [3]



Damaged Frame

Inspection Item #2 [4]



Failing brick walls with a stormwater inlet.

Inspection Item #2 [5]



Failing asphalt surrounding the inlet

[1] Grand Valley State University - https://www.gvsu.edu/groundswell/clogged-storm-drains-71.htm
[2] Georgia Department of Transportation – Stormwater System Inspection and Maintenance Manual, March 2020
[3] https://catchbasinauthority.ca/catch-basin-101/
[4] https://www.fixasphalt.com/catch-basin-repairs
[5] https://ccpia.org/catch-basin-and-manhole-inspections/

Inspection Item #3 [6]



Sediment and debris inside stormwater inlet

Inspection Item #3

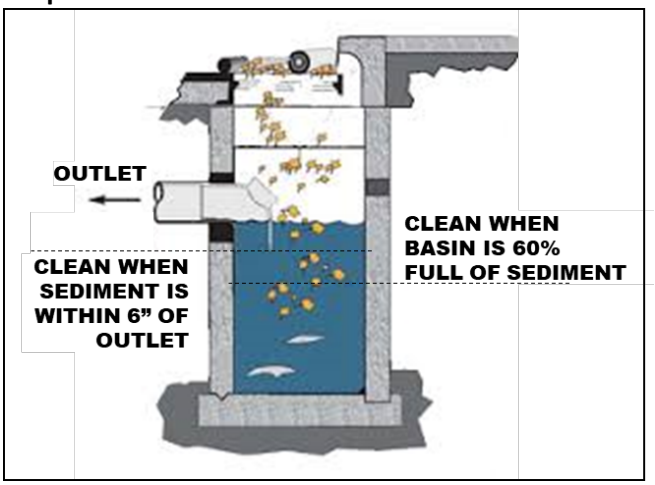

Remove sediment from a catch basin if it fills 60% of the sump or comes within 6" of a pipe.

Inspection Item #4 [7]



Example of inlet filter. Replace when filled or damaged.

Inspection Item #4 [8]



Example of an inlet filter sock, replace if damaged.

PIPES AND CULVERTS

Pipe systems are designed to convey stormwater runoff safely and effectively from inlets to various discharge points and outfalls. A culvert is a structure that channels water under an obstacle such as a roadway or railroad. These structures are subject to functional impairment by a variety of conditions, including:

- Blockage or obstruction due to build up of vegetation, debris, sediment, or other objects
- Cracks and/or joint separation
- Collapsed pipe
- Corrosion
- Root intrusion
- Lack of stabilization

[6] https://www.fixasphalt.com/catch-basin-repairs
[7] https://store.interstateproducts.com/products/Ultra-Drain-Guards/Ultra-Drain-Guard-Adjustable-Frame-Model
[8] https://www.newpig.com/pig-sediment-filter-sock/p/FLT787

Inspection Item #5 [9]



A pipe filled with sediment, inhibiting flow.

Inspection Item #5 [10]



Standing water around an inlet may indicate a blockage.

Inspection Item #6 [11]



Pipe conveyance filled with vegetation.

Inspection Item #7 [12]

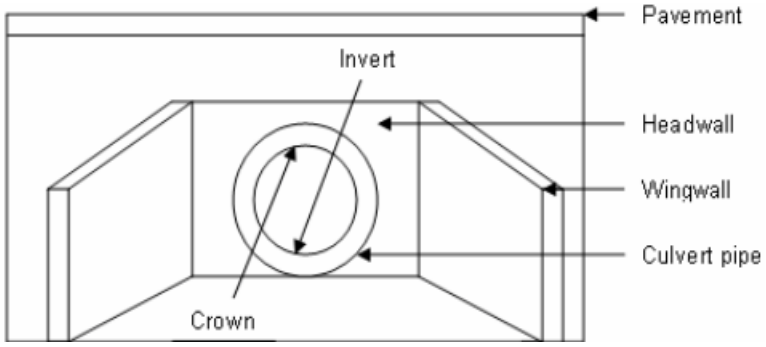

Diagram depicting various components of a culvert.

[9] Georgia Department of Transportation – Stormwater System Inspection and Maintenance Manual, March 2020
[10] https://www3.epa.gov/region9/water/npdes/stormwater-feature.html
[11] Georgia Department of Transportation – Stormwater System Inspection and Maintenance Manual, March 2020
[12] https://www.researchgate.net/figure/Components-of-a-Culvert_fig34_228685906

Inspection Item #7 [13]



A crack is the culvert headwall.

Inspection Item #7 [14]



Evidence of erosion around a culvert.

DITCHES AND SWALES

Ditches and swales serve similar functions. Both are used to convey stormwater. However, there are slight differences. A ditch is a narrow channel typically found along roads and at the edges of parking lots/driveways. A swale is like a ditch, but it is broad and shallow, and usually covered or lined with turfgrass or stone. Issues associated with these structures, which could impede their function include:

- Blockage or obstruction due to vegetation, debris, sediment, or other objects
- Erosion
- Rapidly moving water
- Lack of adequate vegetative cover for grass-lined channels

Inspection Item #8 [15]



Erosion and slumping within a drainage ditch.

Inspection Item #8 [16]



Slumping within a drainage swale.

[13] https://www.sbt-durabi.org/articles/xml/ARN0/
[14] https://lufkindailynews.com/news/local/culverts-crumbling-in-precinct-1/article_a9fed902-4379-5248-ab11-7471e2974298.html
[15] https://graniteseed.com/blog/how-to-stop-a-ditch-from-eroding/
[16] https://www.mnwcd.org/erosion-control

Inspection Item #9 [17]



Litter and debris within a ditch.

Inspection Item #9 [18]



Litter and debris within a swale.

Inspection Item #10 [19]



Cracks and joint separation in concrete channels, removal of vegetation may prevent future damage.

Inspection Item #11 [20]



Rock check dam across a channel.

Inspection Item #11 [21]



Filter sock check dams across a grass swale.

[17] https://craven.ces.ncsu.edu/2023/02/for-those-who-love-to-litter/
[18] https://www.cityoftulsa.org/government/departments/public-works/stormwater-quality/adopt-a-stream/
[19] Georgia Department of Transportation – Stormwater System Inspection and Maintenance Manual, March 2020
[20] EPA Stormwater Best Management Practice, Check Dams, December 2021
[21] EPA Stormwater Best Management Practice, Check Dams, December 2021

Inspection Item #12 [22]



Inlet to a rock-lined swale.

Inspection Item #12 [23]



Sediment accumulation at swale inlet.

END OF DOCUMENT

[22] https://www.stormwater.com/erosion-control/vegetation-management/article/13016118/inlet-protection-during-constructionand-after

[23] https://www.stormwater.com/erosion-control/vegetation-management/article/13016118/inlet-protection-during-constructionand-after

Appendix C

General Spill Response Procedures

SPILL RESPONSE AND NOTIFICATION PROCEDURES

A. Discovery of a Spill

1. Upon discovery of a spill, facility personnel should immediately assess the situation and determine if the spill is considered a "Minor" or "Major" spill. For a spill to be considered "Minor" all the following conditions must be satisfied:

    - ❖ The type of material spilled is known;
    - ❖ The spill is confined to the immediate work area;
    - ❖ The spill has not reached storm drains, sanitary sewer systems, open water, or surrounding soils;
    - ❖ The spill can be safely managed;
    - ❖ The employee can contain and clean up the spill with the PPE that is normally used in the work area;
    - ❖ The spill does not pose a serious threat of fire or an explosion; and
    - ❖ The spill does not pose conditions that are immediately dangerous to life or health.

2. If all the above conditions are met, the spill is considered "Minor". Refer to ***Section B*** of this document for appropriate response actions.

3. If all the above conditions are not met, then the spill is considered "Major". Refer to ***Section C*** of this document for appropriate response actions.

4. If a spill involves flammable liquids, ignitable vapors may be present - precautions must be taken to prevent ignition. Do not turn on or off equipment since sparks may be generated. Additionally, avoid the movement of equipment that could create static electricity. Larger spills of flammable liquids could pose a fire threat and would be considered a "Major" spill. Refer to ***Section C*** for appropriate actions.

B. Response to a "Minor" Spill

1. Identify the source of the spill and the direction in which the spill is heading.

2. Attempt to stop the spill at the source. Where applicable, the source of the spill shall be taken out of service until repairs can be made. If the spill is related to a fuel dispensing system, activate the Emergency Shut-Off (ESO) switch to prevent additional fuel disbursements.

3. If material is released outside a containment area, it is crucial that the material be contained as quickly as possible. Following proper safety procedures, use absorbent materials or diking to contain the spill. Prevent the spill from reaching storm drains, sanitary sewers, or open water. If a spill is flowing toward a drain, install temporary diking around the drain, block off the drain with a drain cover, or place absorbent material around the drain to prevent a discharge.

4. Once the spill has been stopped and contained, estimate the quantity of the spill. Consult applicable Safety Data Sheet (SDS) for material compatibility and environmental precautions. Note and follow recommendations regarding special precautions, spill response equipment, methods, or precautions. All cleanup work shall be conducted in accordance with existing safety protocols and SDS recommendations. Contact the facility Superintendent/Supervisor, or designee, for assistance if needed.

5. Recover or clean up the spilled material as much as possible. Material that cannot be reused must be discarded in accordance with state and federal regulations. Liquids absorbed by porous materials (e.g., wood, gravel, significant quantities of absorbent material, etc.) shall be placed into US DOT-approved 30-gallon or 55-gallon steel drums. Following cleanup, the container shall be secured and appropriately labeled to identify the contents and the date of the spill/cleanup. Containers shall be stored indoors and provided with secondary containment until transported off-site for disposal.

6. For spills that do not involve flammable liquids or other potential hazardous wastes, small quantities of used absorbent materials may be double bagged and disposed of along with municipal trash as long as all liquids have been absorbed (no free liquid may be present).

7. If the spilled material is a flammable liquid, corrosive liquid (pH ≤ 2 or ≥ 12.5), or other potential hazardous waste, all recovered product, impacted material, and used absorbent must be placed into a US DOT-approved containers/drums. Following cleanup, the container(s) shall be secured and appropriately labeled to identify the contents and the date of the spill/cleanup. Containers shall be stored indoors and provided with secondary containment until transported off-site for disposal. The facility Superintendent/ Supervisor, or designee shall be notified that a potential hazardous waste was released and that a waste characterization may be needed to facilitate proper disposal.

8. Surfaces that are contaminated by the spill shall be cleaned utilizing dry absorbent material. Tools and equipment that have been used in the cleanup must be decontaminated immediately after use. Decontamination water (if used) must be minimized, containerized, and disposed of properly.

9. If waste requires disposal, notify the facility Superintendent/Supervisor, or designee who will arrange for the proper characterization and disposal of any waste material. Representative sampling and analysis may be necessary to properly characterize the waste. The waste must be transported and disposed of in compliance with all applicable laws and regulations. Waste manifests, trip tickets, or bills of lading (if required) for waste disposal shall be kept on file.

10. Facility personnel shall restock/replace spill response equipment and absorbent materials used during the clean-up efforts.

11. The facility Superintendent/Supervisor, designee, or other appropriate County personnel shall be notified of the spill in accordance with ***Section D*** of this document.

C. Response to "Major" Spill

A "Major" spill is any discharge that does not meet the definition of a "Minor" spill. Any employee or contractor observing, being involved with, or recognizing a potential or actual spill of oil or other hazardous material, other than a "Minor" spill is responsible for performing the following actions:

1. If there is no danger to human health, attempt to stop and contain the spill at the source. If the spilled material is unknown, if PPE other than that which is typically used in your work area, is necessary to approach the spill area, or if assistance is required to stop the spill, do not attempt to contain the spill. If the spill is related to a fuel dispensing system, activate the Emergency Shut-Off (ESO) switch.

2. Most County employees lack the appropriate training to respond to "Major" spills. If the spill is of an unknown substance, is of a quantity that cannot be safely managed, or poses other risks beyond the training level of the employee, the employee should not attempt to contain or clean up the spill.

3. Evacuate individuals from the area and keep personnel away from the impacted area.

4. Immediately notify the facility Superintendent/Supervisor, or designee of the incident. The notified individual will determine the need for further evacuations and contact emergency response personnel (911), as necessary. *If a situation represents an immediate and grave danger to personnel, the public, structures, or other infrastructure, the individual discovering the incident may call 911 directly without first notifying facility management.*

5. The facility Superintendent/Supervisor or designee will determine if assistance from emergency response contractors is required to clean up the incident and will coordinate such spill response efforts with spill response contractors and other County agencies and first responders.

6. Facility personnel will provide assistance to emergency responders, as appropriate.

D. Reporting a Spill (Internal Notifications)

1. Once a spill is contained and cleanup operations have been initiated, the individual discovering the spill shall notify the appropriate County representatives and provide the following information:

    a) Identify the location, date, and time of the incident;
    b) Identify the type of material spilled or discharged;
    c) Estimate the quantity spilled and the rate of the spill;
    d) Identify the cause of the spill or discharge;
    e) Identify impacted media or infrastructure (soil, storm drains, open water bodies, etc.);
    f) Determine the extent of injuries involved; and
    g) Provide response measures implemented by the facility personnel.

E. Reporting a Spill (Regulatory Notifications)

State of Maryland Reporting Requirements (COMAR 26.10.01.05)

1. Upon discovery of a spill, the Responsible Person shall notify the MDE Emergency Response Division **within two (2) hours** by calling 866-633-4686. The caller shall be prepared to provide the following information:

    a) The time and date of the spill;
    b) The location and cause of the spill;
    c) The mode of transportation or type of facility involved;
    d) Type and quantity of oil spilled;
    e) Details regarding any assistance required;
    f) The name, address, and telephone number of the person making the report; and
    g) Any other pertinent information requested by the Department.

2. MDE will provide further guidance on additional responsibilities.

3. Within **ten (10) working days** of the completed removal and clean-up activities, the Responsible Person shall prepare a report using either County letterhead detailing the incident. The report shall contain the following:

    a) Date, time, and place of the spill;
    b) The amount and type of oil or hazardous substance spilled;
    c) A complete description of circumstances that contributed to the spill;
    d) A complete description of the containment and removal operations performed, including disposal sites to which oil refuse was transported;
    e) Procedures, methods, and precautions instituted to prevent the recurrence of an oil spill from the facility involved;
    f) Any other information considered necessary or required by the MDE for a complete description of the incident; and
    g) A certification that the information provided is true and correct to the knowledge of the person signing the report.

4. The completed report shall be submitted to mdeerd.mema@maryland.gov or faxed to 410-537-3932.

5. A digital copy of the completed report and any accompanying documentation shall be retained

Federal Reporting Requirements - National Response Center (40 CFR 110)

1. If any of the following criteria are met the Responsible Person shall notify the National Response Center (NRC) **within two (2) hours** of the spill discovery by calling 800-424-8802 or 202-426-2675.

    - ❖ The spill has caused a film, sheen, or discoloration of the surface water or shorelines;
    - ❖ The material spilled will violate applicable water quality standards (surface water or groundwater); or
    - ❖ The spill has caused a sludge or emulsion to be deposited beneath the surface of the water or on the shoreline.

2. At a minimum, the following information shall be provided to the NRC:

    a) Name, organization, and telephone number of reporting party;
    b) Name and address of the responsible party;
    c) Date, time, and location of the incident;
    d) Source and cause of the discharge;
    e) Type of material(s) discharged;
    f) Quantity of materials discharged;
    g) Danger or threat posed by discharge;
    h) Number and types of injuries (if any);
    i) Weather conditions at the incident location; and
    j) Other information to help emergency personnel respond to the incident.

3. If unable to report to the NRC, reports can be made to the EPA Regional Office at 800-438-2474 or the U.S. Coast Guard (USCG) at 202-372-1001. The NRC, EPA, or USCG will provide further guidance.

4. A digital record of the NRC notification and any accompanying documentation shall be retained on-site.

Federal Reporting Requirements - EPA Regional Administrator (40 CFR 112.4)

1. If the facility where the spill occurred is regulated under 40 CFR 112 and is required to have a Spill Prevention, Control, and Countermeasures (SPCC) Plan, the Responsible Person shall report the spill to the EPA Region III Administrator when any of the following criteria are met:

   - More than 1,000 gallons of oil is discharged to navigable waters or adjoining shorelines in a single incident; or
   - More than 42 gallons of oil is discharged to navigable waters or adjoining shorelines in each of two incidents occurring within any twelve-month period.

2. The report shall be made in writing **within 60 days** of the spill and shall contain:

   a) Name and location of the facility;
   b) Owner/operator name;
   c) Maximum storage/handling capacity of the facility and normal daily throughput;
   d) Corrective actions and countermeasures taken;
   e) Adequate description of the facility including maps, and flow diagrams;
   f) Cause of the discharge to navigable waters, including a failure analysis;
   g) Additional preventative measures taken or planned to minimize discharge reoccurrence; and
   h) Other information required by the EPA Regional III Administrator.

3. The report shall be submitted to the EPA Regional Administrator at the following address:

   EPA Regional Administrator
   US EPA Region 3
   1650 Arch Street (3RA00)
   Philadelphia, PA 19103-2029

4. A copy of the report shall be retained in the facility SPCC Plan.

Appendix D

Training Records

GOOD HOUSEKEEPING PLAN (GHP)
TRAINING ATTENDANCE LOG

FACILITY NAME: _____

DATE	NAME *(PRINT)*	SIGNATURE

By signing I affirm that I have completed the required annual training; and I am aware of and understand my responsibilities under this Plan.

GOOD HOUSEKEEPING PLAN (GHP)

Harford Community College
401 Thomas Run Road
Bel Air, MD 21015

June 30, 2025

TABLE OF CONTENTS

1.0 BACKGROUND & INTRODUCTION 1
1.1 Objectives 1
1.2 Potential Stormwater Pollutants 1
2.0 RESPONSIBILITIES 3
2.1 GHP Implementation 3
2.2 Plan Review and Modification 3
2.3 Inspections 3
2.3.1 GHP Site Inspections 3
2.3.2 Conveyance System Inspections 4
2.4 Training 4
3.0 BEST MANAGEMENT PRACTICES (BMPs) 5
3.1 Applicability of BMP Fact Sheets 5
3.2 BMP Fact Sheets 5

List of Tables

TABLE 1-1 POTENTIAL STORMWATER POLLUTANTS AND THEIR SOURCES 2

List of BMP Fact Sheets

GH-01 - Waste Management
GH-02 - Vehicle and Equipment Storage
GH-03 - Vehicle/Equipment Refueling
GH-04 - Vehicle Maintenance
GH-05 - Vehicle/Equipment Washing
GH-06 - Material Storage
GH-07 - Aboveground Storage Tanks
GH-08 - Resident Drop-Off Centers
GH-09 - Stockpiles
GH-10 - Deicing Materials

Appendices

Appendix A: GHP Site Inspection Checklist
Appendix B: GHP Stormwater Conveyance Inspection Checklist
Appendix C: General Spill Response Procedures
Appendix D: Training Records

List of Acronyms

AST	-	Aboveground Storage Tank
BMP	-	Best Management Practice
CFR	-	Code of Federal Regulations
GHP	-	Good Housekeeping Plan
MDE	-	Maryland Department of the Environment
MS4	-	Municipal Separate Storm Sewer System
NPDES	-	National Pollutant Discharge Elimination System
SPCC	-	Spill Prevention, Control, and Countermeasure Plan

1.0 BACKGROUND & INTRODUCTION

Polluted stormwater runoff has the potential to enter the County's storm sewer systems (referred to as a municipal separate storm sewer system or MS4), and then discharge, untreated, into local water bodies. To address this potential stormwater pollution, the County is required to obtain a NPDES permit from the Maryland Department of the Environment (MDE). The NPDES Permit requires the County to take actions to prevent stormwater pollution, maintain storm sewer systems, monitor stormwater discharges, and develop and implement comprehensive management programs to minimize the discharge of pollutants from the storm sewer system.

To comply with Part IV.D.4.b of the County's Phase I MS4 Permit, the County must develop, implement, and maintain a Good Housekeeping Plan (GHP) for certain County-owned properties not required to be covered under Maryland's General Permit for Discharges from Stormwater Associated with Industrial Activities *(General Permit 12-SWA / 20-SW).*

To support this effort, a *"Good Housekeeping Plan Applicability Certification"* has been developed to evaluate and document if a specific County-owned facility is subject to the GHP requirements. The *"GHP Applicability Certification"* includes the following ten (10) potential stormwater polluting activities. If any of the covered activities are performed at the facility, then that facility is required to implement a site-specific GHP. The GHP will include each of the potential stormwater polluting activities identified in the *"GHP Applicability Certification"* and corresponding pollution prevention procedures.

- Waste Management
- Vehicle and Equipment Storage
- Vehicle/Equipment Refueling
- Vehicle Maintenance
- Vehicle/Equipment Washing
- Material Storage
- Aboveground Storage Tanks
- Resident Drop-Off Center
- Stockpiles
- Deicing Materials

1.1 Objectives

The GHP was developed to outline suitable practices, procedures, and protocols, or Best Management Practices ("BMPs") for reducing and/or preventing stormwater pollution associated with operations at covered County-owned properties. The intent of the pollution prevention procedures included in the GHP is to limit the release of materials with the potential to impact stormwater, this includes reducing or eliminating (to the extent practical):

- The occurrence of spills and leaks;
- The accidental dumping or release of materials;
- The accumulation of waste, trash, debris, unused parts/equipment, etc.;
- The exposure of hazardous materials to precipitation/run-off;
- Stormwater run-off contamination by improperly stored materials; and/or
- Illicit discharges to the storm drain system.

1.2 Potential Stormwater Pollutants

Table 1-1 on the following page provides a list of common potential pollutants that may result from the GHP-regulated activities identified above. Understanding the sources of these pollutants can help in achieving the goals and objectives of the GHP program.

TABLE 1-1 POTENTIAL STORMWATER POLLUTANTS AND THEIR SOURCES

		Waste Management	Vehicle/Equipment Storage	Vehicle/Equipment Refueling	Vehicle Maintenance	Vehicle/Equipment Washing	Material Storage	Aboveground Storage Tanks	Resident Drop-Off Center	Stockpiles	Deicing Materials
Pollutants	**Sources**	**Associated GHP Activity**									
Sediment	Land disturbance; erosion; paved surfaces; material stockpiles; waste storage; salt/abrasive application	X				X	X		X	X	X
Hydrocarbons *(petroleum compounds)*	Leaking vehicle and equipment; vehicle and equipment cleaning; spills; improper storage; maintenance activities; scrap metal disposal; improper disposal	X	X	X	X	X	X	X	X		
Metals	Vehicle brake and tire wear; vehicle/equipment exhaust; batteries; galvanized metal; paint and wood preservatives; fuels, pesticides, and cleaners; vehicle fueling, maintenance, and washing; industrial waste	X	X	X	X	X	X	X	X		
Toxic Chemicals	Pesticide application; improper chemical storage; leaks and spills from storage containers; leaking vehicles; maintenance activities	X	X		X	X	X	X	X		
Chlorides	De-Icing chemicals										X
Trash/Debris	Improper waste storage and disposal; leaking trash containers; littering; poor housekeeping	X	X				X		X		
Nutrients (nitrogen and Phosphorus)	Fertilizers; malfunctioning septic systems; sewer overflows; animal/pet waste; vehicle washing; decaying grass and leaves; leaking trash containers; atmospheric deposition	X				X	X		X		

2.0 RESPONSIBILITIES

2.1 GHP Implementation

A separate GHP is required for each covered facility. The following individual *(identified by name and/or title)* is accountable for the administration and implementation of the GHP at this facility and has the authority to commit the necessary resources to implement this Plan.

_____

Name and/or Title of Responsible Person

The Responsible Person listed above shall ensure that facility personnel involved in any GHP-covered activities identified in this Plan, are provided with access to, and are familiar with, the contents of this Plan.

2.2 Plan Review and Modification

The *"GHP Applicability Certification"* completed for this facility must be reviewed and updated once every permit term, or within one (1) year of substantial changes to a facility's operations that could reasonably contribute to stormwater pollution. Any newly constructed/acquired facility must be assessed within one (1) year of initiating operations at the facility. The facility's GHP must be amended and reissued to the facility within one (1) year of any changes to the facility's *"GHP Applicability Certification"*.

When warranted, the BMP Fact Sheets provided in Section 3.0 may need to be updated or revised. At the same time, additional BMP Facts Sheets may be added. The need for such updates or modifications will be at the discretion of the County's GHP Program Administrator.

2.3 Inspections

The County's MS4 permit requires each facility covered by a GHP to have the following:

1. Written procedures for annually assessing County properties to prevent the discharge of pollutants, spills, and leaks into the County's storm sewer system; and

2. Written procedure for performing stormwater conveyance system inspections and for removing debris that may cause clogging, backups, and flooding.

To meet these requirements, each facility that is covered by a GHP will be required to complete routine site inspections and stormwater conveyance system inspections as detailed below. Facility management will be responsible for ensuring the necessary inspections are completed within the required timeframes, that corrective actions (if needed) are performed, and that records of inspections and completed corrective actions are maintained for at least five (5) years.

2.3.1 GHP Site Inspections

The GHP Site Inspection will be performed to ensure that each GHP-covered facility is being properly maintained and that there are no visible signs of pollutants entering the stormwater system. GHP facilities shall utilize the *"GHP Site Inspection Checklist"*, provided in ***Appendix A*** to complete the required inspection. At a minimum, each facility is to be inspected every five (5) years.

2.3.2 Conveyance System Inspections

Stormwater conveyance systems are generally comprised of curbs and gutters, catch basins, inlet structures, swales, channels, piping, culverts, detention ponds, outfalls, or other structures that are used to collect, contain, and convey stormwater runoff.

The unimpeded movement of stormwater through conveyance systems is critical in avoiding backups and flooding, which can impede facility operations and damage property. Routine inspections and preventative care of stormwater conveyance systems can ensure these systems function as intended and prevent the need for costly and time-consuming repairs and retrofits.

Each GHP-covered facility is required to conduct routine stormwater conveyance system inspections to ensure the free flow of stormwater within the conveyance systems. GHP-covered facilities shall utilize the *"GHP Stormwater Conveyance System Inspection Checklist"*, provided in ***Appendix B*** to complete the required inspections. At a minimum, facility conveyance system inspections are to be conducted every five (5) years.

2.4 Training

As part of the GHP requirements within the County's Phase I NPDES permit, annual training must be provided to all appropriate staff and contractors. Such training shall be provided to any individuals responsible for implementing the GHP, performing the required inspections, or involved in any of the GHP-covered activities identified in this Plan. The required training shall focus on the duties and responsibilities assigned to site personnel in implementing the GHP and the best management practices (BMPs) prescribed in this Plan for preventing, reducing, and eliminating the discharge of pollutants during facility activities.

The County's MS4/GHP Program Coordinator will be responsible for developing the required training and disseminating it to GHP-covered facilities. Each GHP-covered facility will be responsible for identifying staff/contractors who must attend annual training, ensuring identified staff complete the required training, and maintaining records that document training dates and attendees. Training records and other documentation shall be maintained in ***Appendix D*** of this Plan.

3.0 BEST MANAGEMENT PRACTICES (BMPs)

This section contains a BMP Fact Sheet for each of the ten (10) GHP-regulated activities. The County's operations are not limited to the BMPs contained within this document; nor is the County required to implement all of the pollution prevention measures identified within each BMP Fact Sheet. The County should select and implement those measures that are applicable and have the greatest potential for reducing stormwater pollution.

The BMP Fact Sheets contained within this document offer recommended protocols for a particular activity. These pollution prevention measures are considered non-structural BMPs with a focus on source control of potential pollutants.

3.1 Applicability of BMP Fact Sheets

The *"GHP Applicability Certification"* completed for this facility has identified the activities conducted at this facility that require coverage under this Plan. Each of the BMP Fact Sheets shall be marked as to whether they are applicable or not applicable to this facility. The Applicable/Not Applicable indicator on each BMP Fact Sheet can be revised in response to changes in operations at the facility.

3.2 BMP Fact Sheets

BMP Fact Sheets can be found on the following pages. For the sake of consistency, the general outline of a BMP Fact Sheet will be as follows:

- Identification of GHP-covered activity.
- Applicability of the BMP Fact Sheet to the facility.
- A general description of the concern the activity poses to stormwater.
- Recommended pollution prevention measures for reducing/eliminating stormwater pollution.
- Additional sources of information, if applicable.

WASTE MANAGEMENT

Not Applicable ☐ Applicable ☒

CONCERN

Improperly managed waste can allow trash and debris to be washed into storm drains which poses a concern to water quality, marine life, and public health. It also has the potential to create obstructions in the drainage system, which can lead to backups and flooding. Additionally, improper storage and handling of waste materials can allow pollutants including oils and greases, toxic and chemical compounds (including nutrients), bacteria, metals, and other potentially hazardous wastes to enter waterways.

POLLUTION PREVENTION MEASURES

General *(applicable to all waste management activities)*

1) Provide suitable containers, preferably with working covers, to collect waste materials.
2) Ensure that appropriate waste containers are available in areas where waste is generated.
3) Provide a cover over waste storage areas, if feasible.
4) Avoid positioning waste receptacles near storm drains, water bodies, or areas of concentrated runoff.
5) Ensure that lids to waste containers *(if present)* are kept closed to prevent the intrusion of precipitation and prevent trash from blowing out of the receptacle.
6) For waste receptacles, which do not have lids and could leak, containers should be inspected regularly and controls (e.g., containment, spill response, etc.) shall be enacted whenever leaks or dry-weather discharges are observed.
7) Routinely inspect waste containers, roll-offs, compactors, and other waste receptacles for the presence of excessive waste accumulation and overflowing containers.
8) Ensure that wastes accumulating on the ground are placed in a suitable waste container.
9) Ensure that wastes are removed from the facility regularly by a licensed and contracted vendor.
10) Repair or replace damaged waste container lids.

Trash Compactors

1) Routinely inspect trash compactors for malfunctioning equipment or leaking hydraulic oil and provide the appropriate spill response if leaking equipment is encountered.
2) Regularly inspect compactors for leaking fluids and implement appropriate controls such as spill response/cleanup, collection or diversion of released fluids, providing secondary containment, etc. whenever leaks or dry-weather discharges are observed.

Scrap Metal Collection Containers

1) Avoid placing oily or grease-covered items in uncovered scrap metal recycling collection containers. If needed, wrap oily/greasy items in plastic garbage bags before placing them in the collection container.

Hazardous/Universal Wastes

1) Ensure that hazardous waste and universal wastes (e.g., batteries, bulbs, etc.) are collected and stored indoors or within covered collection containers.
2) Verify that hazardous/universal waste collection containers are in good condition, not leaking, and compatible with the wastes being stored.

Street Sweeping / Vactor Truck Material Storage

1) Do not site storage areas near storm drains, open water bodies, or areas of concentrated runoff.
2) Install sediment control devices (e.g. silt fence, silt socks, hay bales, etc.) around the staging area. Inspect these controls regularly and replace them as needed.
3) Cover the materials staging area, if feasible.
4) Provide oil-absorbent booms if necessary to control oily discharge. Inspect and replace booms regularly.
5) The staging area should be checked periodically for evidence of sediment migrating outside of the staging area. Material that has migrated out of the staging area should be promptly swept and returned to the staging area or disposed of.

Waste Cooking Oil/Grease

1) Maintain storage containers indoors or within a covered location, if feasible.
2) Storage containers shall be secured to prevent infiltration of precipitation and accidental/intentional spills or releases.
3) Carefully transfer waste oil/grease to the appropriate collection container to avoid spills.
4) Maintain suitable spill response equipment near collection containers. Immediately clean up any spilled oil/grease. Keep the exterior of the collection container clean and free of spilled oil/grease.
5) Provide secondary containment for collection containers, if feasible.

VEHICLE AND EQUIPMENT STORAGE

Not Applicable ☐ Applicable ☒

CONCERN

Vehicles and equipment may be stored onsite to support various County operations (e.g., construction, maintenance, snow removal, roadside assistance, mass transit, mowing, etc.). Examples of County owned and operated vehicles and equipment stored onsite at any given time include but are not limited to, the following: cars, trucks, buses, emergency response vehicles, garbage trucks, heavy equipment (backhoes, frontend loaders, etc.), forklifts, towable generators, portable light stands, and roadside equipment. Vehicle and equipment storage is considered a pollutant source due to the potential for incidental releases of petroleum products, lubricants, and various automotive fluids.

POLLUTION PREVENTION MEASURES

1) When possible/practical, store vehicles and equipment inside or under cover to prevent exposure to precipitation.
2) If vehicles or equipment must be stored outside, store vehicles/equipment in designated areas away from areas of concentrated runoff, storm drains, and other stormwater conveyances.
3) Vehicles and equipment shall be staged on impervious (asphalt or concrete) surfaces;
4) Keep truck beds clean and ensure potential stormwater pollutants are stored in closed containers, covered, or otherwise protected from stormwater exposure.
5) Conduct routine visual inspections of vehicles and equipment for the presence of leaks and respond accordingly.
6) Leaking vehicles/equipment should be moved inside or under cover. At a minimum, drip pans or absorbent pads shall be used to contain the leak until the vehicle/equipment can be relocated and the leak addressed.
7) Drain all fluids from wrecked or heavily damaged vehicles and equipment before storage.
8) Have an adequate supply of appropriate spill response equipment readily available and clean up all spills and leaks immediately utilizing dry cleaning techniques (e.g. absorbents and brooms).
9) Train staff in spill response so that incidents are addressed in a timely fashion.
10) Do not wash down areas where leaks have collected on ground surfaces; use dry cleaning methods such as granular absorbents and brooms.

VEHICLE AND EQUIPMENT REFUELING

Not Applicable ☐ Applicable ☒

CONCERN

Refueling activities associated with County vehicles and equipment can result in a discharge of fuel (gasoline and diesel fuel), which has the potential to enter the storm drain system and/or a nearby waterway. Such releases can introduce hydrocarbons, metals, and other toxic chemicals to stormwater runoff.

POLLUTION PREVENTION MEASURES

General Procedures *(applicable to all refueling activities)*

1) Routinely *(at least daily)* inspect the fuel dispensing area for any spills or leaks.
2) Routinely inspect fuel dispensing equipment looking for leaking or damaged equipment. Damaged or malfunctioning equipment shall be taken out of service until it has been repaired.
3) Fuels will only be dispensed into authorized vehicles, equipment, and approved containers.
4) Vehicle operators must remain outside of their vehicles and in attendance of fuel dispensers at all times while dispensing fuel.
5) Third-party contractors must be trained in proper refueling procedures and pollution prevention.
6) Do not utilize a foreign object to keep the dispenser nozzle in the open position. If present, a “hold-open” latch on the nozzle may be used.
7) Do not “top off” a vehicle’s fuel tank once the dispenser nozzle’s automatic shut-off has been activated. Topping off tanks may result in spills. Post signs in fueling areas warning vehicle operators against "topping off" of vehicle fuel tanks.
8) After refueling has stopped, allow several seconds to pass before removing the nozzle and returning it to the dispenser. This will prevent incidental dripping from the nozzle.
9) Employees refueling vehicles shall note the location of the “Emergency Fuel Shut Off” switch, to be used to stop the flow of fuel to the dispensers in the event of a release or emergency.
10) Have an adequate supply of appropriate spill response equipment readily available and clean up all spills immediately utilizing dry cleaning techniques (e.g. absorbents and brooms).
11) Immediately clean up and dispose of used absorbent material.
12) Do not wash down fueling areas; use dry cleaning methods such as granular absorbents and brooms.
13) Conduct refueling activities over impervious (e.g. concrete) surfaces. Place drip pans or absorbent pads under the nozzle if fueling occurs over a permeable surface such as grass or soil.
14) Install oil control devices in storm drains that may receive contaminated runoff from fueling areas.
15) Cover fueling areas with a canopy or roof to prevent direct contact with rainfall. Direct run-on away from fueling areas and collect fueling area run-off in a dead-end sump or oil-water separator.

Mobile Equipment Refueling

1) Refuel equipment on an impervious surface, downgradient of, and at the farthest practical distance from any storm drain, stormwater conveyance, stormwater management feature, or waterway.
2) Utilize secondary containment when refueling equipment (when practical).
3) Ensure mobile refuelers are parked in designated locations and away from areas of concentrated run-off, storm drains, and other stormwater conveyances.
4) Ensure that procedures are in place and that staff is properly trained in spill response/cleanup so that leaks and spills are addressed appropriately and promptly.

VEHICLE MAINTENANCE

GH-04

Not Applicable ☒ Applicable ☐

CONCERN

Vehicle and equipment maintenance can impact the water quality of nearby waterways by exposing stormwater to various pollutants including petroleum hydrocarbons, solvents, antifreeze/coolants, used oil, lubricating oil, grease, brake fluid, metals, and various chemicals. Additionally, vehicles that are wrecked or awaiting repair can be a source of pollution if leaking fluids are not properly controlled.

POLLUTION PREVENTION MEASURES

1) Conduct vehicle and equipment maintenance activities indoors.
2) Make sure incoming vehicles and equipment are inspected for leaking fluids and oil.
3) Move leaking vehicles or equipment indoors or under cover as soon as possible. At a minimum, a drip pan or absorbent pads shall be utilized to contain the leak until the vehicle/equipment can be relocated and the leak addressed.
4) Avoid performing maintenance on vehicles in close proximity to exterior doorways, which may allow released fluids to migrate outdoors.
5) Have an adequate supply of appropriate spill response equipment readily available and clean up all spills and leaks immediately utilizing dry cleaning techniques (e.g. absorbents and brooms).
6) Keep maintenance areas neat and well organized. Remove dirt, debris, and used absorbent regularly.
7) Inspect maintenance areas as well as maintenance equipment on a routine basis.
8) Store vehicles, parts, and generated wastes indoors or off the ground and under cover whenever possible. When practical, provide secondary containment.
9) Promptly transfer used fluids to the proper waste container; do not leave full drip pans or other open containers around the shop. Empty and clean drip pans and containers regularly.
10) Waste liquids shall not be poured into floor drains, sinks, outdoor storm drain inlets, or other storm drains or sewer connections. Liquid wastes are to be collected in properly labeled containers and disposed of by a licensed waste hauler or other appropriate method.
11) Store leaking batteries in a sealed container and provide secondary containment, if feasible.
12) Clean all parts indoors utilizing a self-contained parts washer.
13) Do not hose down indoor service areas to storm drains or areas where it can seep into groundwater.
14) Maintain floor drains in good working order and inspect for proper function on a routine basis. Consider plugging floor drains that discharge to the storm sewer.
15) Ensure oil/water separators (if present) are maintained in proper working order and are checked on a routine basis for the presence of oil.
16) If maintenance work must be performed outdoors, adhere to the following requirements:
    - Conduct maintenance activities over an impervious surface, away from stormwater inlets.
    - Cover outdoor maintenance areas and direct stormwater run-on away from the area.
    - Use drip pans or drop cloths underneath the equipment to catch leaks and drips.
    - Have an adequate supply of appropriate spill response equipment readily available.
    - Clean all spills immediately using dry cleaning techniques (e.g. absorbents and brooms).
    - Avoid performing maintenance activities during precipitation events.
    - Limit temporary outdoor maintenance activities to a single shift/day if additional time is needed to cover the work area at the end of each day/shift.

BMP Fact Sheet

VEHICLE AND EQUIPMENT WASHING

GH-05

Not Applicable ☒ Applicable ☐

CONCERN

Vehicle and equipment washing can generate washwater that contains oil, grease, organic compounds, surfactants, phosphates, metals, and suspended solids. If vehicles/equipment are washed outdoors on impervious surfaces, dirty washwater can contaminate stormwater that ends up in waterways. Washing equipment over pervious surfaces can allow washwater to seep into the ground contaminating groundwater.

POLLUTION PREVENTION MEASURES

1) Vehicle and equipment washing should only be conducted in designated indoor wash bays that capture and recycle washwater to the extent practical.
2) Wastewater from the washing facility should be discharged to the sanitary sewer system under the authorization of a wastewater discharge permit issued by the local municipal authority.
3) The floor of indoor vehicle wash bays should be completely bermed or sloped to collect wash water and prevent migration outdoors.
4) No other activities (e.g., fluid changes, repairs, material storage) shall be performed in wash areas.
5) Keep the wash bay neat and well organized. Sweep or pick up all trash and debris daily or as needed.
6) Solid materials accumulated on vehicles or in vehicle beds (e.g. salt, soil, grass, etc.) shall be knocked off or otherwise removed from the vehicle (while inside the wash bay) prior to washing. Solid materials shall be collected and disposed of properly.
7) For vehicles too large to completely fit in the wash bays, only the portion of the vehicle physically located in the confines of the wash bay shall be cleaned. The vehicle shall then be rotated to allow for the remaining portion of the vehicle to be washed.
8) Use nozzles that automatically turn off water when not in use and consider high-pressure, low-volume sprays.
9) Avoid detergents as much as possible. If detergents are necessary, use a biodegradable, phosphate-free detergent.
10) If discharging to an oil-water separator, use a non-emulsifying detergent.
11) Inspect floor drain systems, holding tanks, and conveyances associated with designated wash areas regularly. Maintain oil/water separators and/or process flowthrough separators on a routine basis.
12) Use commercial car washes when vehicle or equipment washing cannot be performed onsite without causing impacts to stormwater.
13) If washing must occur onsite and outdoors, use a designated impervious area that is marked with posted signs indicating proper washing procedures. This area must be bermed to contain the wash water and graded to direct the wash water to the sanitary sewer, an oil-water separator, a holding tank, a dead-end sump, or other containment area. Captured water shall be disposed of properly.
14) Avoid steam cleaning and engine/undercarriage washing which can produce high pollutant concentrations. If steam cleaning or engine washing is necessary, perform such cleanings within isolated indoor areas, and ensure wash water is treated and discharged to the sanitary sewer (if permitted to do so) or captured for off-site disposal.
15) Train staff in proper washing techniques and how to confine washing to designated wash areas.
16) Consider alternatives to washing such as using air to blow grass and debris from small equipment, wet-wiping equipment with rags, etc.

BMP Fact Sheet

MATERIAL STORAGE

GH-06

Not Applicable ☐ Applicable ☒

CONCERN

The storage of petroleum products, chemicals, paints, cleaners, pesticides, fertilizers, bags of erodible materials like sand, cement, and soil, and other potential pollutants can negatively impact surface waters through the accidental releases or leaching of materials into stormwater. Unprotected outdoor storage areas can generate a wide range of stormwater pollutants, such as sediment, nutrients, toxic materials, and petroleum products.

POLLUTION PREVENTION MEASURES

1) Whenever possible, store containers (e.g. drums, bins, bags, cans, and totes) indoors or under cover to limit exposure to stormwater.
2) Designate specific areas for material delivery and storage that are away from heavy traffic areas, storm drains, stormwater conveyances, and areas of concentrated run-off.
3) Designated outdoor storage areas should be paved or consist of an impervious surface.
4) Provide secondary containment for materials whenever possible or required per regulation.
5) Store materials on pallets to prevent stormwater run-on from coming into contact with materials, prevent container corrosion, and allow for better leak detection. Pallets must be in good condition and promptly replaced once damaged or deteriorated.
6) Stack containers according to the manufacturer's recommendations to avoid damage.
7) Immediately replace damaged, corroded, or leaking containers.
8) Ensure all storage containers are clearly labeled with their contents.
9) Keep containers tightly sealed after use.
10) Maintain an accurate inventory of hazardous substances and limit on-site storage to that which is necessary to support facility operations.
11) Keep storage areas neat and well organized; remove debris and unneeded material promptly.
12) If empty drums are stored outdoors, ensure that all openings are equipped with caps to prevent water intrusion and that the drum/storage area is labeled "Empty Drums".
13) Have an adequate supply of appropriate spill response equipment readily available and clean up all spills and releases immediately utilizing dry cleaning techniques (e.g. sweeping/absorbents).
14) Clean up all migrating dry materials upon discovery and address the source of the release.
15) Provide perimeter controls (e.g., berms, rock check dams, etc.) for erodible stockpiles of materials such as mulch, sand, and gravel to prevent migration into the stormwater system.
16) Routinely inspect material storage areas for leaks, material migration, and damaged or corroded containers. Ensure that secondary containment and other perimeter controls are in satisfactory condition.
17) Additional visual inspections of outdoor storage areas should be conducted after significant rainfall events (i.e., greater than 0.5 inches).

BMP Fact Sheet

ABOVEGROUND STORAGE TANKS

GH-07

Not Applicable ☐ Applicable ☒

CONCERN

Aboveground storage tanks (ASTs) may be used to store fuels, automotive fluids, chemicals, or deicing fluids. Leaks from tanks, piping, or other equipment and releases during fluid transfers can all impact stormwater quality. It is critical to maintain ASTs in good working condition to prevent spills and/or releases from occurring. Improperly managed storage tanks can cause significant environmental impacts.

POLLUTION PREVENTION MEASURES

General *(applicable to all storage tanks)*

1) ASTs should be installed and maintained in accordance with COMAR 26.10 and applicable fire codes.
2) ASTs should be provided with secondary containment, whenever feasible or required by regulation.
3) Secondary containment areas shall be maintained clean and dry; drain valves must be kept closed; accumulated liquid shall only be discharged if there are no visible signs of impacts, and in accordance with applicable regulations.
4) Inspect ASTs monthly to identify any leaking or malfunctioning equipment and ensure tanks are functioning as designed.
5) ASTs shall be equipped with a form of liquid-level detection (i.e. sight gauge, electronic monitoring).
6) ASTs shall be equipped with overfill prevention (i.e. overfill alarm and/or overfill prevention valve).
7) Tanks and piping should be protected from vehicle impact via barriers, bollards, guard rails, etc.
8) Install ASTs on solid foundations over impervious surfaces, and away from areas of concentrated run-off, storm drains, and other stormwater conveyances.
9) Properly label all storage tanks (e.g., contents, capacity, etc.).
10) Keep remote fills and fill port spill buckets clean and dry.
11) Keep fill ports, gates, and tank areas secured when not in use to prevent fuel theft and tampering.
12) Have an adequate supply of appropriate spill response equipment readily available and clean up all spills and leaks immediately utilizing dry cleaning techniques (e.g. absorbents and brooms).
13) Facilities that maintain 1,320 gallons or more of aboveground oil products shall prepare and implement a Spill Prevention, Control, and Countermeasure (SPCC) Plan, per 40 CFR 112.
14) Facilities that maintain 1,000 gallons or more of used oil or 10,000 gallons or more of virgin oil in ASTs shall obtain an Individual Oil Operations Permit from the MDE, per COMAR 26.10.01.09.
15) Owners/Operators of facilities that maintain more than 2,500 gallons of oil in ASTs are required to register each AST with MDE, per COMAR 26.10.01.10.

Bulk Fluid Transfers (Deliveries)

1) All bulk fluid transfer operations shall be performed under the direct supervision of knowledgeable County personnel. At no time shall the delivery vehicle or delivery vehicle operator be unsupervised.
2) The product level within the tank must be measured and available capacity verified before delivery.
3) Deliveries shall be made via fill ports equipped with catch basins to capture drips and spills.
4) Ensure an adequate supply of appropriate spill response equipment is readily available.
5) Post signs in delivery area displaying proper delivery procedures and emergency contact information.

ABOVEGROUND STORAGE TANKS

Used Oil Tanks

1) County personnel must verify the level of product in used oil tanks prior to filling.
2) Used oil tanks should only be filled via designated fill ports. Pumping used oil into the tank via a closed piping system is preferred to manually pouring used oil into the tank.

Brine Tanks

1) If multiple tanks are located onsite, the tanks should be plumbed to ensure that the complete failure of one tank will not drain all the tanks in the system (tanks must be isolated).
2) Minimize seeping and leaking at fittings by properly supporting piping and fittings, using flexible connectors or hoses to reduce stress, and installing corrosion-resistant fittings.
3) Consider placing hoses in non-permeable trenches or using drip-less nozzles to reduce repeated small spills.

RESIDENT DROP-OFF CENTER

Not Applicable ☒ Applicable ☐

CONCERN

Resident Drop-Off Centers are publicly accessible facilities where residents can drop off used automotive fluids (i.e. oil or antifreeze), municipal waste, recyclable, and/or organic waste, typically free of charge. Improper transfer or management of the waste materials can allow a number of pollutants including oils and greases, toxic and chemical compounds, nutrients, metals, and other wastes to enter waterways.

POLLUTION PREVENTION MEASURES

General *(applicable to all materials collected)*

1) Clearly identify waste materials accepted by the facility, and clearly mark designated collection areas.
2) Waste material should be inspected by a County representative, prior to disposal.
3) Avoid positioning waste receptacles near storm drains, water bodies, or areas of concentrated runoff.
4) When practical, receiving areas should be covered.
5) Do not allow containers to overflow or waste materials to accumulate on the ground.

Automotive Fluid Collection

1) Used oil, antifreeze, and automotive fluid receiving areas should be on impervious surfaces, covered, and provided with secondary containment, which shall be maintained clean and dry.
2) Provide lidded waste receptacles in the receiving area for the public to dispose of empty containers. Waste receptacles shall be emptied routinely and waste disposed of properly.
3) Collection areas shall be inspected daily and all trash and spilled liquids appropriately cleaned up.
4) The available capacity of waste liquid collection containers shall be routinely verified and waste removals scheduled, as needed.
5) Install appropriate controls to prohibit the overfilling of waste fluid collection containers.
6) Place appropriate spill response equipment in close proximity to drop-off areas.
7) If aboveground tanks are used to collect waste fluids, refer to BMP Fact Sheet GHP-07 (Aboveground Storage Tanks) for additional recommendations.

Organic Debris Collection

1) Routinely transfer collected organic debris/waste to a composting or disposal facility.
2) Do not permit composting of organic waste except at properly designed and permitted facilities.
3) Enact controls to prevent leaves and other windblown debris from entering stormwater inlets.

Municipal Waste / Recyclables Collection

1) Refer to BMP Fact Sheet GHP-01 (Waste Management) for additional recommendations.

STOCKPILES

GH-09

Not Applicable ☐ Applicable ☒

CONCERN

The County may stockpile various erodible materials, the type of material can vary depending on the needs of the County. Stockpiled material may include soil, sand, millings, slag, cinders, sawdust, landscaping bark, compost, etc. Exposed stockpiles can easily erode due to wind or precipitation and contribute suspended solids to stormwater runoff.

POLLUTION PREVENTION MEASURES

1) Maintain stockpiles of erodible materials within roofed storage buildings or covered storage bins, if feasible. If not, stockpile material on an impervious surface and cover the stockpile.
2) Temporary stockpiles should be placed on an impermeable membrane (tarp) for quick clean-up.
3) Locate stockpiles away from drain inlets, catch basins, swales, areas of concentrated stormwater flow, water bodies, and environmentally sensitive areas.
4) Divert stormwater flows away from/around the stockpiles using a diversion device (e.g., temporary swale, berm, sandbags, or diversion fence).
5) Cover temporary stockpiles of erodible materials with a tarp that has been adequately secured. The covers must be in place at all times when the stockpile is not in active use.
6) When accessing a portion of the stockpile, only remove a section of the cover to minimize exposure to the elements.
7) Use barriers to isolate stockpiled materials from high-traffic areas to prevent tracking of materials.
8) Sweep (do not wash or hose down) in front of material stockpile storage areas at regular intervals, following loading and unloading activities, and during times of heavy use.
9) If material is observed migrating from the stockpile, clean up all migrated material upon discovery and provide additional controls to reduce migration from the stockpile. If such measures are ineffective implement controls to capture pollutants before they migrate off-site (e.g. silt fencing, inlet filters, filter socks, at-grade inlet protection, etc.).
10) Minimize material stockpile inventory based on historical inventory/usage records and public safety operational needs.
11) Cold mix asphalt shall be stored on and covered with plastic sheeting or comparable material.
12) Routinely inspect outdoor material stockpiles to verify existing controls are functioning properly and for signs of erosion or material transport.

BMP Fact Sheet

DEICING MATERIALS

GH-10

Not Applicable ☒ Applicable ☐

CONCERN

When salt and other de-icing materials are stored outside and uncovered, they have a much higher risk of being eroded and transported offsite by stormwater. Improper de-icing material and sand storage may result in stormwater runoff containing elevated concentrations of sodium chloride and dissolved solids. Sodium chloride (e.g., road salt) is an effective deicer but can be highly corrosive to stormwater facilities. Smaller waterways are at a higher risk to increases in salinity, which can threaten aquatic species. Additionally, runoff containing sodium chloride has the potential to reach drinking water sources where small traces can adversely impact public health.

POLLUTION PREVENTION MEASURES

1) Bagged de-icing chemicals must be stored indoors. If stored outdoors bags must be kept on pallets (off the ground) and covered at all times. Bags must be intact without holes or openings.
2) Bulk de-icing materials shall be stored under cover and on an impervious surface.
3) Bulk salt storage areas/buildings shall not be overfilled so that salt spills out beyond the entrance of the storage area/building.
4) Bulk salt storage areas/buildings shall be maintained in a structurally sound condition and in a way that prevents the release of salt and the infiltration of stormwater. Deicing materials should not touch the sides of metal storage containers.
5) Barriers such as berms, gates, knee walls, tarps, and/or straw bales shall be placed at the entrances of bulk salt storage areas/buildings to prohibit the migration of salt and prevent contact with precipitation/stormwater runoff.
6) Routinely inspect storage areas for migrating materials or deterioration of containment structures. Sweep up all migrating materials upon discovery and repair the source of the migrating pollutant.
7) Loading areas should be constructed of impervious material and covered or enclosed, to the extent practical, to reduce potential contact with stormwater.
8) Minimize the distance de-icing materials are transported during loading/unloading activities.
9) Prevent and/or minimize the spillage of salt and de-icing materials during loading/unloading activities, immediately clean spilled or tracked materials.
10) Sweeping of storage and loading/unloading areas shall be conducted immediately following loading/unloading activities.
11) Do not store de-icing materials (bulk or bagged) over or immediately adjacent to drains or waterways.
12) Control site drainage by diverting stormwater run-on away from storage/loading areas using appropriate measures (e.g., curbing, berms, etc.).
13) Slope storage/loading areas to direct salt-contaminated runoff to an appropriate collection area, and in a manner that prevents the runoff from reaching adjacent soil or surface waters.
14) Excess salt shall be removed from salt handling equipment (trucks, spreaders, etc.) following use/prior to storage. All cleaning shall occur on an impervious surface, which is sloped or curbed to contain any washwater and direct it to a collection area for recycling or proper disposal.

Appendix A

GHP Site Inspection Checklist

GOOD HOUSEKEEPING PLAN (GHP)
SITE INSPECTION CHECKLIST

Facility Name: _____ **Inspection Date:** _____

Inspector Name: _____ **Inspector Signature:** _____

- The intent of this inspection is to ensure that the site is being properly maintained and that there are no visible signs of pollutants entering the stormwater system.
- **A shaded status box designates an item in a non-compliant status. Please provide an explanation for all non-compliant items and subsequently document all corrective actions performed.**
- Retain the completed checklists for five (5) years.

Item	Status			CORRECTIVE ACTIONS/COMMENTS *Items which cannot be corrected immediately must be reported to the GHP/NPDES Program Manager*
	Yes	No	N/A	
GENERAL HOUSEKEEPING				
1. Are exterior areas of the facility free of accumulated trash, debris, and unneeded materials?				
2. Are stormwater drains and inlets free from debris, sediment, and evidence of spills/releases?				
3. Is the facility free from signs of erosion?				
4. Are paved surfaces free of accumulated sediment?				
5. Is spill response equipment available in maintenance areas, fueling areas, hazardous material storage areas, and/or other required areas?				
6. Are spill kits and absorbent materials clearly labeled and accessible (i.e. items are not piled on top of or in front of spill kits)?				
7. Are spill kits secured from being stolen or misused?				
8. Is there a labeled container present for the disposal of used spill cleanup material?				

GOOD HOUSEKEEPING PLAN (GHP)
SITE INSPECTION CHECKLIST

Item	Status			CORRECTIVE ACTIONS/COMMENTS *Items which cannot be corrected immediately must be reported to the GHP/NPDES Program Manager*
	Yes	No	N/A	
9. Does spill response equipment (i.e. spill kits, absorbent materials) need to be replenished?				
WASTE MANAGEMENT				
10. Are areas around solid waste containers/roll-offs/compactors free of excessive trash accumulation or overflowing containers?				
11. Are areas around solid waste containers/roll-offs/compactors free of visible evidence (i.e. leaks, staining) of ongoing stormwater pollution?				
12. Are scrap metal containers in good order and free from evidence of leaking oil/grease?				
13. For dumpsters, roll-offs, and other waste receptacles, where leaks are observed, have appropriate controls (e.g. containment, spill response, etc.) been enacted?				
14. Are the lids (if present) to solid waste containers closed?				
15. Is street sweeping/vactor waste being managed appropriately (i.e. no evidence of material migration)?				
16. Is waste cooking grease managed appropriately (i.e. no evidence of spilled material or excessive staining)?				
VEHICLE & EQUIPMENT STORAGE				
17. Are stored vehicles/equipment free from leaks?				
18. If leaks are present, are they being managed appropriately (drip pan or other methods in place to capture released liquids)?				
19. Are storage areas free of visible evidence of chronic leaks/spills (i.e. significant staining)?				

GOOD HOUSEKEEPING PLAN (GHP)
SITE INSPECTION CHECKLIST

Item	Status			CORRECTIVE ACTIONS/COMMENTS *Items which cannot be corrected immediately must be reported to the GHP/NPDES Program Manager*
	Yes	No	N/A	
VEHICLE & EQUIPMENT REFUELING				
20. Are the areas around refueling areas free from evidence of spills or leaks?				
21. Are refueling areas free of used absorbent material that has not been swept/cleaned up?				
22. Do fuel dispensers and hoses appear to be in good working order and well-maintained?				
VEHICLE MAINTENANCE				
23. Is there any indication that vehicle maintenance activities are being conducted outdoors?				
24. Is there any indication that vehicle maintenance activities are contributing to stormwater pollution?				
VEHICLE & EQUIPMENT WASHING				
25. If performed on-site, does all vehicle/equipment washing occur indoors?				
26. Is wash water collected and disposed of properly?				
27. Is there any indication that vehicle/equipment wash water is being released to stormwater conveyances or pervious areas?				
MATERIAL STORAGE				
28. Are all outdoor storage areas free from visible signs of leaks or spilled material?				
29. Are material storage containers in good condition?				

GOOD HOUSEKEEPING PLAN (GHP)
SITE INSPECTION CHECKLIST

Item	Status			CORRECTIVE ACTIONS/COMMENTS *Items which cannot be corrected immediately must be reported to the GHP/NPDES Program Manager*
	Yes	No	N/A	
30. Are drums, totes, and other containers (that are <u>not</u> empty) stored off the ground and covered, or stored indoors?				
31. Are liquid-containing drums/totes located outdoors provided with secondary containment?				
32. Are containers that are located outdoors equipped with closed lids except when material transfers are occurring?				
33. Are materials, which could impact stormwater, stored away from heavy traffic areas, or protected from vehicle collisions?				
34. Are chemical storage containers properly labeled?				
35. If empty drums are stored outside, are all openings equipped with caps to prevent water intrusion?				
ABOVEGROUND STORAGE TANKS				
36. Are all storage tanks, and surrounding areas free from visible signs of leaks or spilled material?				
37. Do storage tanks appear to be in good working order (e.g. free of obvious signs of damage or malfunctioning equipment)?				
38. Are remote fills associated with tanks free of liquid and debris?				
RESIDENT DROP-OFF CENTERS				
39. Are waste collection areas clearly identified?				
40. Are used oil/antifreeze collection tanks, containment structures, and surrounding areas free from visible signs of leaks or spilled material?				

GOOD HOUSEKEEPING PLAN (GHP)
SITE INSPECTION CHECKLIST

Item	Status			CORRECTIVE ACTIONS/COMMENTS *Items which cannot be corrected immediately must be reported to the GHP/NPDES Program Manager*
	Yes	No	N/A	
41. Do used oil/antifreeze collection tanks appear to be in good working order (e.g. free of obvious signs of damage or malfunctioning equipment)?				
42. Are empty used oil/antifreeze containers being collected and disposed of in the trash?				
43. Are areas around waste/recyclables containers free of excessive trash accumulation or overflowing containers?				
44. Are areas around waste/recyclables containers free of visible evidence (i.e. leaks, staining) of ongoing stormwater pollution?				
45. Are organic debris collection areas free of visible evidence of ongoing stormwater pollution (e.g. leaves and debris in stormwater conveyances)?				
STOCKPILES				
46. Are material piles, including salt, soil, sand, and millings isolated (i.e. covered, bermed, etc.) to prevent stormwater run-on and run-off?				
47. Are areas surrounding material piles (e.g. salt, soil, sand, millings, etc.) free of tracked or migrated material?				
DEICING MATERIALS				
48. Are all deicing materials stored indoors or undercover?				
49. Are salt storage structures in good condition (e.g. no evidence of material escaping or stormwater infiltration)?				
50. Is the salt loading area clean?				

GOOD HOUSEKEEPING PLAN (GHP)
SITE INSPECTION CHECKLIST

Item	Status			CORRECTIVE ACTIONS/COMMENTS *Items which cannot be corrected immediately must be reported to the GHP/NPDES Program Manager*
	Yes	No	N/A	
51. If deicing materials are tarped, is the tarp secure and covering the entire pile?				
52. Are bags of salt stored indoors, or off the ground and covered?				

ADDITIONAL COMMENTS:

Appendix B

GHP Stormwater Conveyance System Inspection Checklist

GOOD HOUSEKEEPING PLAN (GHP)
STORMWATER CONVEYANCE SYSTEM INSPECTION CHECKLIST

Facility Name: _____ **Inspection Date:** _____

Inspector Name: _____ **Inspector Signature:** _____

- The intent of this inspection is to ensure the free flow of stormwater within on-site conveyance systems and prevent damage/flooding.
- **If maintenance is needed, please provide an explanation, and document all corrective actions performed.**
- **Inspections shall include visually accessible infrastructure only; at no time shall inspection personnel enter a confined space.**
- Retain the completed checklists for five (5) years.

Item	Item Checked (Y/N/NA)	Maintenance Needed (Y/N)	CORRECTIVE ACTIONS/COMMENTS *Items which cannot be corrected immediately must be reported to the GHP/NPDES Program Manager*
CATCH BASINS / INLETS			
1. Look for debris and sediment blocking catch basin grates. If found, remove.			
2. Look for damage or cracks to the frame, grate, basin walls or bottom. If found, schedule repairs or replacement.			
3. Look for sediment and debris in the catch basin sump. If sediment fills 60% of the sump or comes within 6” of a pipe it should be scheduled for cleaning.			
4. If any type of filtering device is present, verify that the filter is not clogged, torn, or damaged; clean if clogged, replace if damaged.			
PIPES / CULVERTS			
5. Look for evidence of clogged piping (e.g. visual obstructions, standing water within manholes/inlets structures, etc.). If found, remove or schedule cleaning.			
6. Verify vegetation growth, if present, does not impede water flow. If it does, mow, cut back, or remove.			

GOOD HOUSEKEEPING PLAN (GHP)

STORMWATER CONVEYANCE SYSTEM INSPECTION CHECKLIST

Item	Item Checked (Y/N/NA)	Maintenance Needed (Y/N)	CORRECTIVE ACTIONS/COMMENTS *Items which cannot be corrected immediately must be reported to the GHP/NPDES Program Manager*
7. Inspect for damaged piping, inlets, outlets, headwalls, wingwalls, or excessive erosion. If found, make or schedule repairs.			
DITCHES / TRAPEZOIDAL SWALES			
8. Check for erosion, slumping, or undercutting. If found, make or schedule repairs.			
9. Look for trash and sediment accumulation. Remove all trash and remove sediment if it will impede water flow or clog downstream structures.			
10. Verify vegetation growth does not impede water flow. If it does, mow, cut back, or remove. Remove any trees or shrubs growing within the ditch.			
11. Check the integrity of check dams, filter socks, or other flow dissipation/filtering devices within the ditch or swale. Perform or schedule service if they are clogged, damaged, or deteriorated.			
12. Check inlets and outlets for debris accumulation, damage, or erosion. If found, make or schedule repairs.			

ADDITIONAL COMMENTS:

GUIDANCE DOCUMENT
GOOD HOUSEKEEPING PLAN - STORMWATER CONVEYANCE INSPECTIONS

INTRODUCTION

Maintaining catch basins, stormwater inlets, and other stormwater conveyance structures on a regular basis will remove pollutants, prevent backups, and ensure the system functions as intended to avoid flooding.

Each GHP-covered facility is required to conduct routine stormwater conveyance system inspections to ensure the free flow of stormwater within the conveyance system(s). The GHP includes a *"GHP Stormwater Conveyance System Inspection Checklist"*, to be used when completing the required inspections. This document provides additional background and guidance to aid facility personnel in completing the inspections.

CATCH BASINS / INLETS

Catch basins and inlets are all points for stormwater to enter storm drain systems. These structures are typically part of a larger conveyance system with many interconnected components where the impairment of one component can compromise the functionality of the larger system. Inlets and catch basins are subject to functional impairment by a variety of conditions, including:

- Structural damage including from vehicles and plows
- Cracks/joint separation at piping (inlet and outlet) connections
- Leaking due to cracks and joint separation
- Missing or damaged grates and grate frames
- Corrosion
- Blockage caused by debris, sediment, vegetation, or other objects

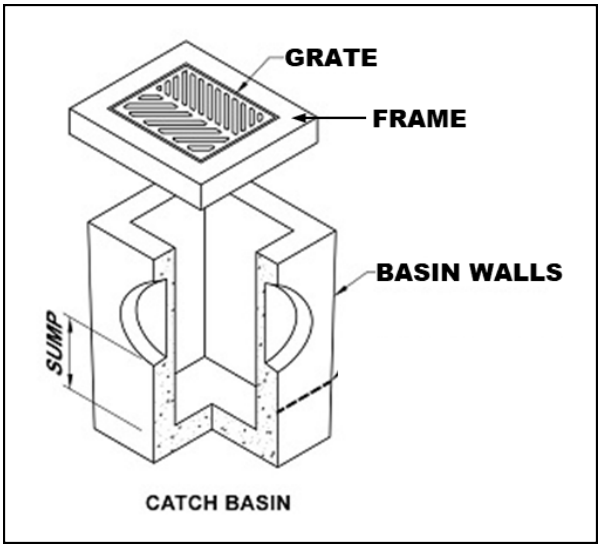

Figure 1 – Catch Basin Diagram

The following photos provide additional information related to the various inspection items, including examples of typical issues that may be encountered. The photo numbers correspond to the inspection checklist item number.

Inspection Item #1 [1]



Debris and sediment blocking inlet/catch basin grate.

Inspection Item #2 [2]



Damaged Grate

Inspection Item #2 [3]



Damaged Frame

Inspection Item #2 [4]



Failing brick walls with a stormwater inlet.

Inspection Item #2 [5]



Failing asphalt surrounding the inlet

[1] Grand Valley State University - https://www.gvsu.edu/groundswell/clogged-storm-drains-71.htm
[2] Georgia Department of Transportation – Stormwater System Inspection and Maintenance Manual, March 2020
[3] https://catchbasinauthority.ca/catch-basin-101/
[4] https://www.fixasphalt.com/catch-basin-repairs
[5] https://ccpia.org/catch-basin-and-manhole-inspections/

Inspection Item #3 [6]



Sediment and debris inside stormwater inlet

Inspection Item #3

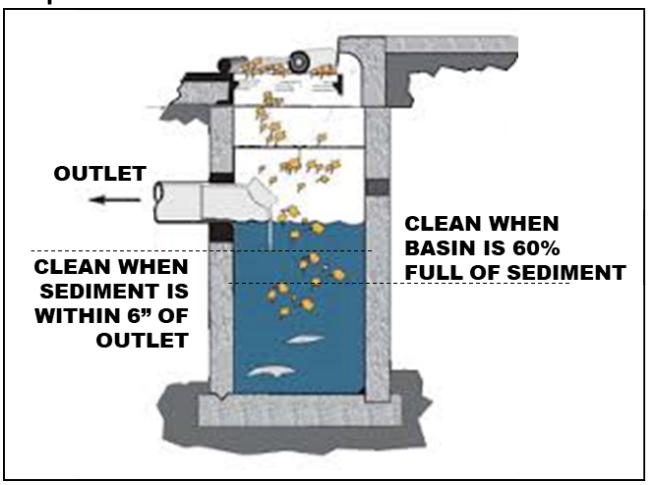

Remove sediment from a catch basin if it fills 60% of the sump or comes within 6" of a pipe.

Inspection Item #4 [7]



Example of inlet filter. Replace when filled or damaged. damaged.

Inspection Item #4 [8]



Example of an inlet filter sock, replace if

PIPES AND CULVERTS

Pipe systems are designed to convey stormwater runoff safely and effectively from inlets to various discharge points and outfalls. A culvert is a structure that channels water under an obstacle such as a roadway or railroad. These structures are subject to functional impairment by a variety of conditions, including:

- Blockage or obstruction due to build up of vegetation, debris, sediment, or other objects
- Cracks and/or joint separation
- Collapsed pipe
- Corrosion
- Root intrusion
- Lack of stabilization

[6] https://www.fixasphalt.com/catch-basin-repairs
[7] https://store.interstateproducts.com/products/Ultra-Drain-Guards/Ultra-Drain-Guard-Adjustable-Frame-Model
[8] https://www.newpig.com/pig-sediment-filter-sock/p/FLT787

Inspection Item #5 [9]



A pipe filled with sediment, inhibiting flow.

Inspection Item #5 [10]



Standing water around an inlet may indicate a blockage.

Inspection Item #6 [11]



Pipe conveyance filled with vegetation.

Inspection Item #7 [12]

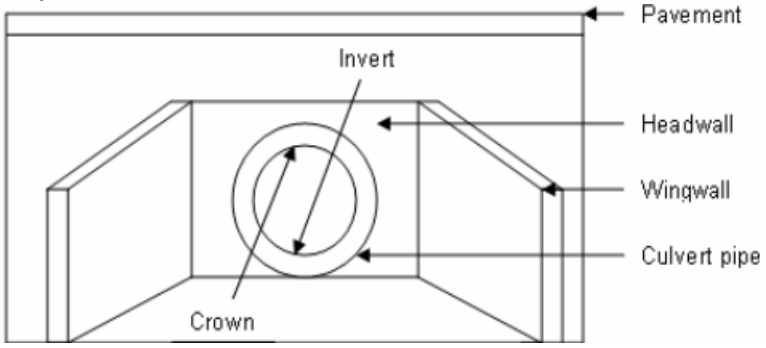

Diagram depicting various components of a culvert.

[9] Georgia Department of Transportation – Stormwater System Inspection and Maintenance Manual, March 2020
[10] https://www3.epa.gov/region9/water/npdes/stormwater-feature.html
[11] Georgia Department of Transportation – Stormwater System Inspection and Maintenance Manual, March 2020
[12] https://www.researchgate.net/figure/Components-of-a-Culvert_fig34_228685906

Inspection Item #7 [13]



A crack is the culvert headwall.

Inspection Item #7 [14]



Evidence of erosion around a culvert.

DITCHES AND SWALES

Ditches and swales serve similar functions. Both are used to convey stormwater. However, there are slight differences. A ditch is a narrow channel typically found along roads and at the edges of parking lots/driveways. A swale is like a ditch, but it is broad and shallow, and usually covered or lined with turfgrass or stone. Issues associated with these structures, which could impede their function include:

- Blockage or obstruction due to vegetation, debris, sediment, or other objects
- Erosion
- Rapidly moving water
- Lack of adequate vegetative cover for grass-lined channels

Inspection Item #8 [15]



Erosion and slumping within a drainage ditch.

Inspection Item #8 [16]



Slumping within a drainage swale.

[13] https://www.sbt-durabi.org/articles/xml/ARN0/
[14] https://lufkindailynews.com/news/local/culverts-crumbling-in-precinct-1/article_a9fed902-4379-5248-ab11-7471e2974298.html
[15] https://graniteseed.com/blog/how-to-stop-a-ditch-from-eroding/
[16] https://www.mnwcd.org/erosion-control

Inspection Item #9 [17]



Litter and debris within a ditch.

Inspection Item #9 [18]



Litter and debris within a swale.

Inspection Item #10 [19]



Cracks and joint separation in concrete channels, removal of vegetation may prevent future damage.

Inspection Item #11 [20]



Rock check dam across a channel.

Inspection Item #11 [21]



Filter sock check dams across a grass swale.

[17] https://craven.ces.ncsu.edu/2023/02/for-those-who-love-to-litter/
[18] https://www.cityoftulsa.org/government/departments/public-works/stormwater-quality/adopt-a-stream/
[19] Georgia Department of Transportation – Stormwater System Inspection and Maintenance Manual, March 2020
[20] EPA Stormwater Best Management Practice, Check Dams, December 2021
[21] EPA Stormwater Best Management Practice, Check Dams, December 2021

Inspection Item #12 [22]



Inlet to a rock-lined swale.

Inspection Item #12 [23]



Sediment accumulation at swale inlet.

END OF DOCUMENT

[22] https://www.stormwater.com/erosion-control/vegetation-management/article/13016118/inlet-protection-during-constructionand-after

[23] https://www.stormwater.com/erosion-control/vegetation-management/article/13016118/inlet-protection-during-constructionand-after

Appendix C

General Spill Response Procedures

SPILL RESPONSE AND NOTIFICATION PROCEDURES

A. Discovery of a Spill

1. Upon discovery of a spill, facility personnel should immediately assess the situation and determine if the spill is considered a "Minor" or "Major" spill. For a spill to be considered "Minor" all the following conditions must be satisfied:

    - ❖ The type of material spilled is known;
    - ❖ The spill is confined to the immediate work area;
    - ❖ The spill has not reached storm drains, sanitary sewer systems, open water, or surrounding soils;
    - ❖ The spill can be safely managed;
    - ❖ The employee can contain and clean up the spill with the PPE that is normally used in the work area;
    - ❖ The spill does not pose a serious threat of fire or an explosion; and
    - ❖ The spill does not pose conditions that are immediately dangerous to life or health.

2. If all the above conditions are met, the spill is considered "Minor". Refer to ***Section B*** of this document for appropriate response actions.

3. If all the above conditions are not met, then the spill is considered "Major". Refer to ***Section C*** of this document for appropriate response actions.

4. If a spill involves flammable liquids, ignitable vapors may be present - precautions must be taken to prevent ignition. Do not turn on or off equipment since sparks may be generated. Additionally, avoid the movement of equipment that could create static electricity. Larger spills of flammable liquids could pose a fire threat and would be considered a "Major" spill. Refer to ***Section C*** for appropriate actions.

B. Response to a "Minor" Spill

1. Identify the source of the spill and the direction in which the spill is heading.

2. Attempt to stop the spill at the source. Where applicable, the source of the spill shall be taken out of service until repairs can be made. If the spill is related to a fuel dispensing system, activate the Emergency Shut-Off (ESO) switch to prevent additional fuel disbursements.

3. If material is released outside a containment area, it is crucial that the material be contained as quickly as possible. Following proper safety procedures, use absorbent materials or diking to contain the spill. Prevent the spill from reaching storm drains, sanitary sewers, or open water. If a spill is flowing toward a drain, install temporary diking around the drain, block off the drain with a drain cover, or place absorbent material around the drain to prevent a discharge.

4. Once the spill has been stopped and contained, estimate the quantity of the spill. Consult applicable Safety Data Sheet (SDS) for material compatibility and environmental precautions. Note and follow recommendations regarding special precautions, spill response equipment, methods, or precautions. All cleanup work shall be conducted in accordance with existing safety protocols and SDS recommendations. Contact the facility Superintendent/Supervisor, or designee, for assistance if needed.

5. Recover or clean up the spilled material as much as possible. Material that cannot be reused must be discarded in accordance with state and federal regulations. Liquids absorbed by porous materials (e.g., wood, gravel, significant quantities of absorbent material, etc.) shall be placed into US DOT-approved 30-gallon or 55-gallon steel drums. Following cleanup, the container shall be secured and appropriately labeled to identify the contents and the date of the spill/cleanup. Containers shall be stored indoors and provided with secondary containment until transported off-site for disposal.

6. For spills that do not involve flammable liquids or other potential hazardous wastes, small quantities of used absorbent materials may be double bagged and disposed of along with municipal trash as long as all liquids have been absorbed (no free liquid may be present).

7. If the spilled material is a flammable liquid, corrosive liquid (pH ≤ 2 or ≥ 12.5), or other potential hazardous waste, all recovered product, impacted material, and used absorbent must be placed into a US DOT-approved containers/drums. Following cleanup, the container(s) shall be secured and appropriately labeled to identify the contents and the date of the spill/cleanup. Containers shall be stored indoors and provided with secondary containment until transported off-site for disposal. The facility Superintendent/ Supervisor, or designee shall be notified that a potential hazardous waste was released and that a waste characterization may be needed to facilitate proper disposal.

8. Surfaces that are contaminated by the spill shall be cleaned utilizing dry absorbent material. Tools and equipment that have been used in the cleanup must be decontaminated immediately after use. Decontamination water (if used) must be minimized, containerized, and disposed of properly.

9. If waste requires disposal, notify the facility Superintendent/Supervisor, or designee who will arrange for the proper characterization and disposal of any waste material. Representative sampling and analysis may be necessary to properly characterize the waste. The waste must be transported and disposed of in compliance with all applicable laws and regulations. Waste manifests, trip tickets, or bills of lading (if required) for waste disposal shall be kept on file.

10. Facility personnel shall restock/replace spill response equipment and absorbent materials used during the clean-up efforts.

11. The facility Superintendent/Supervisor, designee, or other appropriate County personnel shall be notified of the spill in accordance with ***Section D*** of this document.

C. Response to "Major" Spill

A "Major" spill is any discharge that does not meet the definition of a "Minor" spill. Any employee or contractor observing, being involved with, or recognizing a potential or actual spill of oil or other hazardous material, other than a "Minor" spill is responsible for performing the following actions:

1. If there is no danger to human health, attempt to stop and contain the spill at the source. If the spilled material is unknown, if PPE other than that which is typically used in your work area, is necessary to approach the spill area, or if assistance is required to stop the spill, do not attempt to contain the spill. If the spill is related to a fuel dispensing system, activate the Emergency Shut-Off (ESO) switch.

2. Most County employees lack the appropriate training to respond to "Major" spills. If the spill is of an unknown substance, is of a quantity that cannot be safely managed, or poses other risks beyond the training level of the employee, the employee should not attempt to contain or clean up the spill.

3. Evacuate individuals from the area and keep personnel away from the impacted area.

4. Immediately notify the facility Superintendent/Supervisor, or designee of the incident. The notified individual will determine the need for further evacuations and contact emergency response personnel (911), as necessary. *If a situation represents an immediate and grave danger to personnel, the public, structures, or other infrastructure, the individual discovering the incident may call 911 directly without first notifying facility management.*

5. The facility Superintendent/Supervisor or designee will determine if assistance from emergency response contractors is required to clean up the incident and will coordinate such spill response efforts with spill response contractors and other County agencies and first responders.

6. Facility personnel will provide assistance to emergency responders, as appropriate.

D. Reporting a Spill (Internal Notifications)

1. Once a spill is contained and cleanup operations have been initiated, the individual discovering the spill shall notify the appropriate County representatives and provide the following information:

    a) Identify the location, date, and time of the incident;
    b) Identify the type of material spilled or discharged;
    c) Estimate the quantity spilled and the rate of the spill;
    d) Identify the cause of the spill or discharge;
    e) Identify impacted media or infrastructure (soil, storm drains, open water bodies, etc.);
    f) Determine the extent of injuries involved; and
    g) Provide response measures implemented by the facility personnel.

E. Reporting a Spill (Regulatory Notifications)

State of Maryland Reporting Requirements (COMAR 26.10.01.05)

1. Upon discovery of a spill, the Responsible Person shall notify the MDE Emergency Response Division **within two (2) hours** by calling 866-633-4686. The caller shall be prepared to provide the following information:

    a) The time and date of the spill;
    b) The location and cause of the spill;
    c) The mode of transportation or type of facility involved;
    d) Type and quantity of oil spilled;
    e) Details regarding any assistance required;
    f) The name, address, and telephone number of the person making the report; and
    g) Any other pertinent information requested by the Department.

2. MDE will provide further guidance on additional responsibilities.

3. Within **ten (10) working days** of the completed removal and clean-up activities, the Responsible Person shall prepare a report using either County letterhead detailing the incident. The report shall contain the following:

    a) Date, time, and place of the spill;
    b) The amount and type of oil or hazardous substance spilled;
    c) A complete description of circumstances that contributed to the spill;
    d) A complete description of the containment and removal operations performed, including disposal sites to which oil refuse was transported;
    e) Procedures, methods, and precautions instituted to prevent the recurrence of an oil spill from the facility involved;
    f) Any other information considered necessary or required by the MDE for a complete description of the incident; and
    g) A certification that the information provided is true and correct to the knowledge of the person signing the report.

4. The completed report shall be submitted to mdeerd.mema@maryland.gov or faxed to 410-537-3932.

5. A digital copy of the completed report and any accompanying documentation shall be retained

Federal Reporting Requirements - National Response Center (40 CFR 110)

1. If any of the following criteria are met the Responsible Person shall notify the National Response Center (NRC) **within two (2) hours** of the spill discovery by calling 800-424-8802 or 202-426-2675.

    - ❖ The spill has caused a film, sheen, or discoloration of the surface water or shorelines;
    - ❖ The material spilled will violate applicable water quality standards (surface water or groundwater); or
    - ❖ The spill has caused a sludge or emulsion to be deposited beneath the surface of the water or on the shoreline.

2. At a minimum, the following information shall be provided to the NRC:

    a) Name, organization, and telephone number of reporting party;
    b) Name and address of the responsible party;
    c) Date, time, and location of the incident;
    d) Source and cause of the discharge;
    e) Type of material(s) discharged;
    f) Quantity of materials discharged;
    g) Danger or threat posed by discharge;
    h) Number and types of injuries (if any);
    i) Weather conditions at the incident location; and
    j) Other information to help emergency personnel respond to the incident.

3. If unable to report to the NRC, reports can be made to the EPA Regional Office at 800-438-2474 or the U.S. Coast Guard (USCG) at 202-372-1001. The NRC, EPA, or USCG will provide further guidance.

4. A digital record of the NRC notification and any accompanying documentation shall be retained on-site.

Federal Reporting Requirements - EPA Regional Administrator (40 CFR 112.4)

1. If the facility where the spill occurred is regulated under 40 CFR 112 and is required to have a Spill Prevention, Control, and Countermeasures (SPCC) Plan, the Responsible Person shall report the spill to the EPA Region III Administrator when any of the following criteria are met:

   - ❖ More than 1,000 gallons of oil is discharged to navigable waters or adjoining shorelines in a single incident; or
   - ❖ More than 42 gallons of oil is discharged to navigable waters or adjoining shorelines in each of two incidents occurring within any twelve-month period.

2. The report shall be made in writing **within 60 days** of the spill and shall contain:

   a) Name and location of the facility;
   b) Owner/operator name;
   c) Maximum storage/handling capacity of the facility and normal daily throughput;
   d) Corrective actions and countermeasures taken;
   e) Adequate description of the facility including maps, and flow diagrams;
   f) Cause of the discharge to navigable waters, including a failure analysis;
   g) Additional preventative measures taken or planned to minimize discharge reoccurrence; and
   h) Other information required by the EPA Regional III Administrator.

3. The report shall be submitted to the EPA Regional Administrator at the following address:

   EPA Regional Administrator
   US EPA Region 3
   1650 Arch Street (3RA00)
   Philadelphia, PA 19103-2029

4. A copy of the report shall be retained in the facility SPCC Plan.

Appendix D

Training Records

GOOD HOUSEKEEPING PLAN (GHP)
TRAINING ATTENDANCE LOG

FACILITY NAME: _____

DATE	NAME *(PRINT)*	SIGNATURE

By signing I affirm that I have completed the required annual training; and I am aware of and understand my responsibilities under this Plan.

GOOD HOUSEKEEPING PLAN (GHP)

Harford County Water Treatment Plant
3340 Abingdon Road
Abingdon, MD 21009

June 30, 2025

TABLE OF CONTENTS

1.0 BACKGROUND & INTRODUCTION 1
1.1 Objectives 1
1.2 Potential Stormwater Pollutants 1
2.0 RESPONSIBILITIES 3
2.1 GHP Implementation 3
2.2 Plan Review and Modification 3
2.3 Inspections 3
2.3.1 GHP Site Inspections 3
2.3.2 Conveyance System Inspections 4
2.4 Training 4
3.0 BEST MANAGEMENT PRACTICES (BMPs) 5
3.1 Applicability of BMP Fact Sheets 5
3.2 BMP Fact Sheets 5

List of Tables

TABLE 1-1 POTENTIAL STORMWATER POLLUTANTS AND THEIR SOURCES 2

List of BMP Fact Sheets

GH-01 - Waste Management
GH-02 - Vehicle and Equipment Storage
GH-03 - Vehicle/Equipment Refueling
GH-04 - Vehicle Maintenance
GH-05 - Vehicle/Equipment Washing
GH-06 - Material Storage
GH-07 - Aboveground Storage Tanks
GH-08 - Resident Drop-Off Centers
GH-09 - Stockpiles
GH-10 - Deicing Materials

Appendices

Appendix A: GHP Site Inspection Checklist
Appendix B: GHP Stormwater Conveyance Inspection Checklist
Appendix C: General Spill Response Procedures
Appendix D: Training Records

List of Acronyms

AST	-	Aboveground Storage Tank
BMP	-	Best Management Practice
CFR	-	Code of Federal Regulations
GHP	-	Good Housekeeping Plan
MDE	-	Maryland Department of the Environment
MS4	-	Municipal Separate Storm Sewer System
NPDES	-	National Pollutant Discharge Elimination System
SPCC	-	Spill Prevention, Control, and Countermeasure Plan

1.0 BACKGROUND & INTRODUCTION

Polluted stormwater runoff has the potential to enter the County's storm sewer systems (referred to as a municipal separate storm sewer system or MS4), and then discharge, untreated, into local water bodies. To address this potential stormwater pollution, the County is required to obtain a NPDES permit from the Maryland Department of the Environment (MDE). The NPDES Permit requires the County to take actions to prevent stormwater pollution, maintain storm sewer systems, monitor stormwater discharges, and develop and implement comprehensive management programs to minimize the discharge of pollutants from the storm sewer system.

To comply with Part IV.D.4.b of the County's Phase I MS4 Permit, the County must develop, implement, and maintain a Good Housekeeping Plan (GHP) for certain County-owned properties not required to be covered under Maryland's General Permit for Discharges from Stormwater Associated with Industrial Activities *(General Permit 12-SWA / 20-SW).*

To support this effort, a *"Good Housekeeping Plan Applicability Certification"* has been developed to evaluate and document if a specific County-owned facility is subject to the GHP requirements. The *"GHP Applicability Certification"* includes the following ten (10) potential stormwater polluting activities. If any of the covered activities are performed at the facility, then that facility is required to implement a site-specific GHP. The GHP will include each of the potential stormwater polluting activities identified in the *"GHP Applicability Certification"* and corresponding pollution prevention procedures.

- Waste Management
- Vehicle and Equipment Storage
- Vehicle/Equipment Refueling
- Vehicle Maintenance
- Vehicle/Equipment Washing
- Material Storage
- Aboveground Storage Tanks
- Resident Drop-Off Center
- Stockpiles
- Deicing Materials

1.1 Objectives

The GHP was developed to outline suitable practices, procedures, and protocols, or Best Management Practices ("BMPs") for reducing and/or preventing stormwater pollution associated with operations at covered County-owned properties. The intent of the pollution prevention procedures included in the GHP is to limit the release of materials with the potential to impact stormwater, this includes reducing or eliminating (to the extent practical):

- The occurrence of spills and leaks;
- The accidental dumping or release of materials;
- The accumulation of waste, trash, debris, unused parts/equipment, etc.;
- The exposure of hazardous materials to precipitation/run-off;
- Stormwater run-off contamination by improperly stored materials; and/or
- Illicit discharges to the storm drain system.

1.2 Potential Stormwater Pollutants

Table 1-1 on the following page provides a list of common potential pollutants that may result from the GHP-regulated activities identified above. Understanding the sources of these pollutants can help in achieving the goals and objectives of the GHP program.

TABLE 1-1 POTENTIAL STORMWATER POLLUTANTS AND THEIR SOURCES

		Waste Management	Vehicle/Equipment Storage	Vehicle/Equipment Refueling	Vehicle Maintenance	Vehicle/Equipment Washing	Material Storage	Aboveground Storage Tanks	Resident Drop-Off Center	Stockpiles	Deicing Materials
Pollutants	**Sources**	**Associated GHP Activity**									
Sediment	Land disturbance; erosion; paved surfaces; material stockpiles; waste storage; salt/abrasive application	X				X	X		X	X	X
Hydrocarbons *(petroleum compounds)*	Leaking vehicle and equipment; vehicle and equipment cleaning; spills; improper storage; maintenance activities; scrap metal disposal; improper disposal	X	X	X	X	X	X	X	X		
Metals	Vehicle brake and tire wear; vehicle/equipment exhaust; batteries; galvanized metal; paint and wood preservatives; fuels, pesticides, and cleaners; vehicle fueling, maintenance, and washing; industrial waste	X	X	X	X	X	X	X	X		
Toxic Chemicals	Pesticide application; improper chemical storage; leaks and spills from storage containers; leaking vehicles; maintenance activities	X	X		X	X	X	X	X		
Chlorides	De-Icing chemicals										X
Trash/Debris	Improper waste storage and disposal; leaking trash containers; littering; poor housekeeping	X	X				X		X		
Nutrients (nitrogen and Phosphorus)	Fertilizers; malfunctioning septic systems; sewer overflows; animal/pet waste; vehicle washing; decaying grass and leaves; leaking trash containers; atmospheric deposition	X				X	X		X		

2.0 RESPONSIBILITIES

2.1 GHP Implementation

A separate GHP is required for each covered facility. The following individual *(identified by name and/or title)* is accountable for the administration and implementation of the GHP at this facility and has the authority to commit the necessary resources to implement this Plan.

_____

Name and/or Title of Responsible Person

The Responsible Person listed above shall ensure that facility personnel involved in any GHP-covered activities identified in this Plan, are provided with access to, and are familiar with, the contents of this Plan.

2.2 Plan Review and Modification

The *"GHP Applicability Certification"* completed for this facility must be reviewed and updated once every permit term, or within one (1) year of substantial changes to a facility's operations that could reasonably contribute to stormwater pollution. Any newly constructed/acquired facility must be assessed within one (1) year of initiating operations at the facility. The facility's GHP must be amended and reissued to the facility within one (1) year of any changes to the facility's *"GHP Applicability Certification"*.

When warranted, the BMP Fact Sheets provided in Section 3.0 may need to be updated or revised. At the same time, additional BMP Facts Sheets may be added. The need for such updates or modifications will be at the discretion of the County's GHP Program Administrator.

2.3 Inspections

The County's MS4 permit requires each facility covered by a GHP to have the following:

1. Written procedures for annually assessing County properties to prevent the discharge of pollutants, spills, and leaks into the County's storm sewer system; and

2. Written procedure for performing stormwater conveyance system inspections and for removing debris that may cause clogging, backups, and flooding.

To meet these requirements, each facility that is covered by a GHP will be required to complete routine site inspections and stormwater conveyance system inspections as detailed below. Facility management will be responsible for ensuring the necessary inspections are completed within the required timeframes, that corrective actions (if needed) are performed, and that records of inspections and completed corrective actions are maintained for at least five (5) years.

2.3.1 GHP Site Inspections

The GHP Site Inspection will be performed to ensure that each GHP-covered facility is being properly maintained and that there are no visible signs of pollutants entering the stormwater system. GHP facilities shall utilize the *"GHP Site Inspection Checklist"*, provided in ***Appendix A*** to complete the required inspection. At a minimum, each facility is to be inspected every five (5) years.

2.3.2 Conveyance System Inspections

Stormwater conveyance systems are generally comprised of curbs and gutters, catch basins, inlet structures, swales, channels, piping, culverts, detention ponds, outfalls, or other structures that are used to collect, contain, and convey stormwater runoff.

The unimpeded movement of stormwater through conveyance systems is critical in avoiding backups and flooding, which can impede facility operations and damage property. Routine inspections and preventative care of stormwater conveyance systems can ensure these systems function as intended and prevent the need for costly and time-consuming repairs and retrofits.

Each GHP-covered facility is required to conduct routine stormwater conveyance system inspections to ensure the free flow of stormwater within the conveyance systems. GHP-covered facilities shall utilize the *"GHP Stormwater Conveyance System Inspection Checklist"*, provided in ***Appendix B*** to complete the required inspections. At a minimum, facility conveyance system inspections are to be conducted every five (5) years.

2.4 Training

As part of the GHP requirements within the County's Phase I NPDES permit, annual training must be provided to all appropriate staff and contractors. Such training shall be provided to any individuals responsible for implementing the GHP, performing the required inspections, or involved in any of the GHP-covered activities identified in this Plan. The required training shall focus on the duties and responsibilities assigned to site personnel in implementing the GHP and the best management practices (BMPs) prescribed in this Plan for preventing, reducing, and eliminating the discharge of pollutants during facility activities.

The County's MS4/GHP Program Coordinator will be responsible for developing the required training and disseminating it to GHP-covered facilities. Each GHP-covered facility will be responsible for identifying staff/contractors who must attend annual training, ensuring identified staff complete the required training, and maintaining records that document training dates and attendees. Training records and other documentation shall be maintained in ***Appendix D*** of this Plan.

3.0 BEST MANAGEMENT PRACTICES (BMPs)

This section contains a BMP Fact Sheet for each of the ten (10) GHP-regulated activities. The County's operations are not limited to the BMPs contained within this document; nor is the County required to implement all of the pollution prevention measures identified within each BMP Fact Sheet. The County should select and implement those measures that are applicable and have the greatest potential for reducing stormwater pollution.

The BMP Fact Sheets contained within this document offer recommended protocols for a particular activity. These pollution prevention measures are considered non-structural BMPs with a focus on source control of potential pollutants.

3.1 Applicability of BMP Fact Sheets

The *"GHP Applicability Certification"* completed for this facility has identified the activities conducted at this facility that require coverage under this Plan. Each of the BMP Fact Sheets shall be marked as to whether they are applicable or not applicable to this facility. The Applicable/Not Applicable indicator on each BMP Fact Sheet can be revised in response to changes in operations at the facility.

3.2 BMP Fact Sheets

BMP Fact Sheets can be found on the following pages. For the sake of consistency, the general outline of a BMP Fact Sheet will be as follows:

- Identification of GHP-covered activity.
- Applicability of the BMP Fact Sheet to the facility.
- A general description of the concern the activity poses to stormwater.
- Recommended pollution prevention measures for reducing/eliminating stormwater pollution.
- Additional sources of information, if applicable.

WASTE MANAGEMENT

Not Applicable ☐ Applicable ☒

CONCERN

Improperly managed waste can allow trash and debris to be washed into storm drains which poses a concern to water quality, marine life, and public health. It also has the potential to create obstructions in the drainage system, which can lead to backups and flooding. Additionally, improper storage and handling of waste materials can allow pollutants including oils and greases, toxic and chemical compounds (including nutrients), bacteria, metals, and other potentially hazardous wastes to enter waterways.

POLLUTION PREVENTION MEASURES

General *(applicable to all waste management activities)*

1) Provide suitable containers, preferably with working covers, to collect waste materials.
2) Ensure that appropriate waste containers are available in areas where waste is generated.
3) Provide a cover over waste storage areas, if feasible.
4) Avoid positioning waste receptacles near storm drains, water bodies, or areas of concentrated runoff.
5) Ensure that lids to waste containers *(if present)* are kept closed to prevent the intrusion of precipitation and prevent trash from blowing out of the receptacle.
6) For waste receptacles, which do not have lids and could leak, containers should be inspected regularly and controls (e.g., containment, spill response, etc.) shall be enacted whenever leaks or dry-weather discharges are observed.
7) Routinely inspect waste containers, roll-offs, compactors, and other waste receptacles for the presence of excessive waste accumulation and overflowing containers.
8) Ensure that wastes accumulating on the ground are placed in a suitable waste container.
9) Ensure that wastes are removed from the facility regularly by a licensed and contracted vendor.
10) Repair or replace damaged waste container lids.

Trash Compactors

1) Routinely inspect trash compactors for malfunctioning equipment or leaking hydraulic oil and provide the appropriate spill response if leaking equipment is encountered.
2) Regularly inspect compactors for leaking fluids and implement appropriate controls such as spill response/cleanup, collection or diversion of released fluids, providing secondary containment, etc. whenever leaks or dry-weather discharges are observed.

Scrap Metal Collection Containers

1) Avoid placing oily or grease-covered items in uncovered scrap metal recycling collection containers. If needed, wrap oily/greasy items in plastic garbage bags before placing them in the collection container.

Hazardous/Universal Wastes

1) Ensure that hazardous waste and universal wastes (e.g., batteries, bulbs, etc.) are collected and stored indoors or within covered collection containers.
2) Verify that hazardous/universal waste collection containers are in good condition, not leaking, and compatible with the wastes being stored.

Street Sweeping / Vactor Truck Material Storage

1) Do not site storage areas near storm drains, open water bodies, or areas of concentrated runoff.
2) Install sediment control devices (e.g. silt fence, silt socks, hay bales, etc.) around the staging area. Inspect these controls regularly and replace them as needed.
3) Cover the materials staging area, if feasible.
4) Provide oil-absorbent booms if necessary to control oily discharge. Inspect and replace booms regularly.
5) The staging area should be checked periodically for evidence of sediment migrating outside of the staging area. Material that has migrated out of the staging area should be promptly swept and returned to the staging area or disposed of.

Waste Cooking Oil/Grease

1) Maintain storage containers indoors or within a covered location, if feasible.
2) Storage containers shall be secured to prevent infiltration of precipitation and accidental/intentional spills or releases.
3) Carefully transfer waste oil/grease to the appropriate collection container to avoid spills.
4) Maintain suitable spill response equipment near collection containers. Immediately clean up any spilled oil/grease. Keep the exterior of the collection container clean and free of spilled oil/grease.
5) Provide secondary containment for collection containers, if feasible.

VEHICLE AND EQUIPMENT STORAGE

Not Applicable ☐ Applicable ☒

CONCERN

Vehicles and equipment may be stored onsite to support various County operations (e.g., construction, maintenance, snow removal, roadside assistance, mass transit, mowing, etc.). Examples of County owned and operated vehicles and equipment stored onsite at any given time include but are not limited to, the following: cars, trucks, buses, emergency response vehicles, garbage trucks, heavy equipment (backhoes, frontend loaders, etc.), forklifts, towable generators, portable light stands, and roadside equipment. Vehicle and equipment storage is considered a pollutant source due to the potential for incidental releases of petroleum products, lubricants, and various automotive fluids.

POLLUTION PREVENTION MEASURES

1) When possible/practical, store vehicles and equipment inside or under cover to prevent exposure to precipitation.
2) If vehicles or equipment must be stored outside, store vehicles/equipment in designated areas away from areas of concentrated runoff, storm drains, and other stormwater conveyances.
3) Vehicles and equipment shall be staged on impervious (asphalt or concrete) surfaces;
4) Keep truck beds clean and ensure potential stormwater pollutants are stored in closed containers, covered, or otherwise protected from stormwater exposure.
5) Conduct routine visual inspections of vehicles and equipment for the presence of leaks and respond accordingly.
6) Leaking vehicles/equipment should be moved inside or under cover. At a minimum, drip pans or absorbent pads shall be used to contain the leak until the vehicle/equipment can be relocated and the leak addressed.
7) Drain all fluids from wrecked or heavily damaged vehicles and equipment before storage.
8) Have an adequate supply of appropriate spill response equipment readily available and clean up all spills and leaks immediately utilizing dry cleaning techniques (e.g. absorbents and brooms).
9) Train staff in spill response so that incidents are addressed in a timely fashion.
10) Do not wash down areas where leaks have collected on ground surfaces; use dry cleaning methods such as granular absorbents and brooms.

VEHICLE AND EQUIPMENT REFUELING

Not Applicable ☒ Applicable ☐

CONCERN

Refueling activities associated with County vehicles and equipment can result in a discharge of fuel (gasoline and diesel fuel), which has the potential to enter the storm drain system and/or a nearby waterway. Such releases can introduce hydrocarbons, metals, and other toxic chemicals to stormwater runoff.

POLLUTION PREVENTION MEASURES

General Procedures *(applicable to all refueling activities)*

1) Routinely *(at least daily)* inspect the fuel dispensing area for any spills or leaks.
2) Routinely inspect fuel dispensing equipment looking for leaking or damaged equipment. Damaged or malfunctioning equipment shall be taken out of service until it has been repaired.
3) Fuels will only be dispensed into authorized vehicles, equipment, and approved containers.
4) Vehicle operators must remain outside of their vehicles and in attendance of fuel dispensers at all times while dispensing fuel.
5) Third-party contractors must be trained in proper refueling procedures and pollution prevention.
6) Do not utilize a foreign object to keep the dispenser nozzle in the open position. If present, a “hold-open” latch on the nozzle may be used.
7) Do not “top off” a vehicle’s fuel tank once the dispenser nozzle’s automatic shut-off has been activated. Topping off tanks may result in spills. Post signs in fueling areas warning vehicle operators against "topping off" of vehicle fuel tanks.
8) After refueling has stopped, allow several seconds to pass before removing the nozzle and returning it to the dispenser. This will prevent incidental dripping from the nozzle.
9) Employees refueling vehicles shall note the location of the “Emergency Fuel Shut Off” switch, to be used to stop the flow of fuel to the dispensers in the event of a release or emergency.
10) Have an adequate supply of appropriate spill response equipment readily available and clean up all spills immediately utilizing dry cleaning techniques (e.g. absorbents and brooms).
11) Immediately clean up and dispose of used absorbent material.
12) Do not wash down fueling areas; use dry cleaning methods such as granular absorbents and brooms.
13) Conduct refueling activities over impervious (e.g. concrete) surfaces. Place drip pans or absorbent pads under the nozzle if fueling occurs over a permeable surface such as grass or soil.
14) Install oil control devices in storm drains that may receive contaminated runoff from fueling areas.
15) Cover fueling areas with a canopy or roof to prevent direct contact with rainfall. Direct run-on away from fueling areas and collect fueling area run-off in a dead-end sump or oil-water separator.

Mobile Equipment Refueling

1) Refuel equipment on an impervious surface, downgradient of, and at the farthest practical distance from any storm drain, stormwater conveyance, stormwater management feature, or waterway.
2) Utilize secondary containment when refueling equipment (when practical).
3) Ensure mobile refuelers are parked in designated locations and away from areas of concentrated run-off, storm drains, and other stormwater conveyances.
4) Ensure that procedures are in place and that staff is properly trained in spill response/cleanup so that leaks and spills are addressed appropriately and promptly.

VEHICLE MAINTENANCE

GH-04

Not Applicable ☒ Applicable ☐

CONCERN

Vehicle and equipment maintenance can impact the water quality of nearby waterways by exposing stormwater to various pollutants including petroleum hydrocarbons, solvents, antifreeze/coolants, used oil, lubricating oil, grease, brake fluid, metals, and various chemicals. Additionally, vehicles that are wrecked or awaiting repair can be a source of pollution if leaking fluids are not properly controlled.

POLLUTION PREVENTION MEASURES

1) Conduct vehicle and equipment maintenance activities indoors.
2) Make sure incoming vehicles and equipment are inspected for leaking fluids and oil.
3) Move leaking vehicles or equipment indoors or under cover as soon as possible. At a minimum, a drip pan or absorbent pads shall be utilized to contain the leak until the vehicle/equipment can be relocated and the leak addressed.
4) Avoid performing maintenance on vehicles in close proximity to exterior doorways, which may allow released fluids to migrate outdoors.
5) Have an adequate supply of appropriate spill response equipment readily available and clean up all spills and leaks immediately utilizing dry cleaning techniques (e.g. absorbents and brooms).
6) Keep maintenance areas neat and well organized. Remove dirt, debris, and used absorbent regularly.
7) Inspect maintenance areas as well as maintenance equipment on a routine basis.
8) Store vehicles, parts, and generated wastes indoors or off the ground and under cover whenever possible. When practical, provide secondary containment.
9) Promptly transfer used fluids to the proper waste container; do not leave full drip pans or other open containers around the shop. Empty and clean drip pans and containers regularly.
10) Waste liquids shall not be poured into floor drains, sinks, outdoor storm drain inlets, or other storm drains or sewer connections. Liquid wastes are to be collected in properly labeled containers and disposed of by a licensed waste hauler or other appropriate method.
11) Store leaking batteries in a sealed container and provide secondary containment, if feasible.
12) Clean all parts indoors utilizing a self-contained parts washer.
13) Do not hose down indoor service areas to storm drains or areas where it can seep into groundwater.
14) Maintain floor drains in good working order and inspect for proper function on a routine basis. Consider plugging floor drains that discharge to the storm sewer.
15) Ensure oil/water separators (if present) are maintained in proper working order and are checked on a routine basis for the presence of oil.
16) If maintenance work must be performed outdoors, adhere to the following requirements:
    - Conduct maintenance activities over an impervious surface, away from stormwater inlets.
    - Cover outdoor maintenance areas and direct stormwater run-on away from the area.
    - Use drip pans or drop cloths underneath the equipment to catch leaks and drips.
    - Have an adequate supply of appropriate spill response equipment readily available.
    - Clean all spills immediately using dry cleaning techniques (e.g. absorbents and brooms).
    - Avoid performing maintenance activities during precipitation events.
    - Limit temporary outdoor maintenance activities to a single shift/day if additional time is needed to cover the work area at the end of each day/shift.

BMP Fact Sheet

VEHICLE AND EQUIPMENT WASHING

GH-05

Not Applicable ☒ Applicable ☐

CONCERN

Vehicle and equipment washing can generate washwater that contains oil, grease, organic compounds, surfactants, phosphates, metals, and suspended solids. If vehicles/equipment are washed outdoors on impervious surfaces, dirty washwater can contaminate stormwater that ends up in waterways. Washing equipment over pervious surfaces can allow washwater to seep into the ground contaminating groundwater.

POLLUTION PREVENTION MEASURES

1) Vehicle and equipment washing should only be conducted in designated indoor wash bays that capture and recycle washwater to the extent practical.
2) Wastewater from the washing facility should be discharged to the sanitary sewer system under the authorization of a wastewater discharge permit issued by the local municipal authority.
3) The floor of indoor vehicle wash bays should be completely bermed or sloped to collect wash water and prevent migration outdoors.
4) No other activities (e.g., fluid changes, repairs, material storage) shall be performed in wash areas.
5) Keep the wash bay neat and well organized. Sweep or pick up all trash and debris daily or as needed.
6) Solid materials accumulated on vehicles or in vehicle beds (e.g. salt, soil, grass, etc.) shall be knocked off or otherwise removed from the vehicle (while inside the wash bay) prior to washing. Solid materials shall be collected and disposed of properly.
7) For vehicles too large to completely fit in the wash bays, only the portion of the vehicle physically located in the confines of the wash bay shall be cleaned. The vehicle shall then be rotated to allow for the remaining portion of the vehicle to be washed.
8) Use nozzles that automatically turn off water when not in use and consider high-pressure, low-volume sprays.
9) Avoid detergents as much as possible. If detergents are necessary, use a biodegradable, phosphate-free detergent.
10) If discharging to an oil-water separator, use a non-emulsifying detergent.
11) Inspect floor drain systems, holding tanks, and conveyances associated with designated wash areas regularly. Maintain oil/water separators and/or process flowthrough separators on a routine basis.
12) Use commercial car washes when vehicle or equipment washing cannot be performed onsite without causing impacts to stormwater.
13) If washing must occur onsite and outdoors, use a designated impervious area that is marked with posted signs indicating proper washing procedures. This area must be bermed to contain the wash water and graded to direct the wash water to the sanitary sewer, an oil-water separator, a holding tank, a dead-end sump, or other containment area. Captured water shall be disposed of properly.
14) Avoid steam cleaning and engine/undercarriage washing which can produce high pollutant concentrations. If steam cleaning or engine washing is necessary, perform such cleanings within isolated indoor areas, and ensure wash water is treated and discharged to the sanitary sewer (if permitted to do so) or captured for off-site disposal.
15) Train staff in proper washing techniques and how to confine washing to designated wash areas.
16) Consider alternatives to washing such as using air to blow grass and debris from small equipment, wet-wiping equipment with rags, etc.

BMP Fact Sheet

MATERIAL STORAGE

GH-06

Not Applicable ☐ Applicable ☒

CONCERN

The storage of petroleum products, chemicals, paints, cleaners, pesticides, fertilizers, bags of erodible materials like sand, cement, and soil, and other potential pollutants can negatively impact surface waters through the accidental releases or leaching of materials into stormwater. Unprotected outdoor storage areas can generate a wide range of stormwater pollutants, such as sediment, nutrients, toxic materials, and petroleum products.

POLLUTION PREVENTION MEASURES

1) Whenever possible, store containers (e.g. drums, bins, bags, cans, and totes) indoors or under cover to limit exposure to stormwater.
2) Designate specific areas for material delivery and storage that are away from heavy traffic areas, storm drains, stormwater conveyances, and areas of concentrated run-off.
3) Designated outdoor storage areas should be paved or consist of an impervious surface.
4) Provide secondary containment for materials whenever possible or required per regulation.
5) Store materials on pallets to prevent stormwater run-on from coming into contact with materials, prevent container corrosion, and allow for better leak detection. Pallets must be in good condition and promptly replaced once damaged or deteriorated.
6) Stack containers according to the manufacturer's recommendations to avoid damage.
7) Immediately replace damaged, corroded, or leaking containers.
8) Ensure all storage containers are clearly labeled with their contents.
9) Keep containers tightly sealed after use.
10) Maintain an accurate inventory of hazardous substances and limit on-site storage to that which is necessary to support facility operations.
11) Keep storage areas neat and well organized; remove debris and unneeded material promptly.
12) If empty drums are stored outdoors, ensure that all openings are equipped with caps to prevent water intrusion and that the drum/storage area is labeled "Empty Drums".
13) Have an adequate supply of appropriate spill response equipment readily available and clean up all spills and releases immediately utilizing dry cleaning techniques (e.g. sweeping/absorbents).
14) Clean up all migrating dry materials upon discovery and address the source of the release.
15) Provide perimeter controls (e.g., berms, rock check dams, etc.) for erodible stockpiles of materials such as mulch, sand, and gravel to prevent migration into the stormwater system.
16) Routinely inspect material storage areas for leaks, material migration, and damaged or corroded containers. Ensure that secondary containment and other perimeter controls are in satisfactory condition.
17) Additional visual inspections of outdoor storage areas should be conducted after significant rainfall events (i.e., greater than 0.5 inches).

BMP Fact Sheet

ABOVEGROUND STORAGE TANKS

GH-07

Not Applicable ☐ Applicable ☒

CONCERN

Aboveground storage tanks (ASTs) may be used to store fuels, automotive fluids, chemicals, or deicing fluids. Leaks from tanks, piping, or other equipment and releases during fluid transfers can all impact stormwater quality. It is critical to maintain ASTs in good working condition to prevent spills and/or releases from occurring. Improperly managed storage tanks can cause significant environmental impacts.

POLLUTION PREVENTION MEASURES

General *(applicable to all storage tanks)*

1) ASTs should be installed and maintained in accordance with COMAR 26.10 and applicable fire codes.
2) ASTs should be provided with secondary containment, whenever feasible or required by regulation.
3) Secondary containment areas shall be maintained clean and dry; drain valves must be kept closed; accumulated liquid shall only be discharged if there are no visible signs of impacts, and in accordance with applicable regulations.
4) Inspect ASTs monthly to identify any leaking or malfunctioning equipment and ensure tanks are functioning as designed.
5) ASTs shall be equipped with a form of liquid-level detection (i.e. sight gauge, electronic monitoring).
6) ASTs shall be equipped with overfill prevention (i.e. overfill alarm and/or overfill prevention valve).
7) Tanks and piping should be protected from vehicle impact via barriers, bollards, guard rails, etc.
8) Install ASTs on solid foundations over impervious surfaces, and away from areas of concentrated run-off, storm drains, and other stormwater conveyances.
9) Properly label all storage tanks (e.g., contents, capacity, etc.).
10) Keep remote fills and fill port spill buckets clean and dry.
11) Keep fill ports, gates, and tank areas secured when not in use to prevent fuel theft and tampering.
12) Have an adequate supply of appropriate spill response equipment readily available and clean up all spills and leaks immediately utilizing dry cleaning techniques (e.g. absorbents and brooms).
13) Facilities that maintain 1,320 gallons or more of aboveground oil products shall prepare and implement a Spill Prevention, Control, and Countermeasure (SPCC) Plan, per 40 CFR 112.
14) Facilities that maintain 1,000 gallons or more of used oil or 10,000 gallons or more of virgin oil in ASTs shall obtain an Individual Oil Operations Permit from the MDE, per COMAR 26.10.01.09.
15) Owners/Operators of facilities that maintain more than 2,500 gallons of oil in ASTs are required to register each AST with MDE, per COMAR 26.10.01.10.

Bulk Fluid Transfers (Deliveries)

1) All bulk fluid transfer operations shall be performed under the direct supervision of knowledgeable County personnel. At no time shall the delivery vehicle or delivery vehicle operator be unsupervised.
2) The product level within the tank must be measured and available capacity verified before delivery.
3) Deliveries shall be made via fill ports equipped with catch basins to capture drips and spills.
4) Ensure an adequate supply of appropriate spill response equipment is readily available.
5) Post signs in delivery area displaying proper delivery procedures and emergency contact information.

ABOVEGROUND STORAGE TANKS

Used Oil Tanks

1) County personnel must verify the level of product in used oil tanks prior to filling.
2) Used oil tanks should only be filled via designated fill ports. Pumping used oil into the tank via a closed piping system is preferred to manually pouring used oil into the tank.

Brine Tanks

1) If multiple tanks are located onsite, the tanks should be plumbed to ensure that the complete failure of one tank will not drain all the tanks in the system (tanks must be isolated).
2) Minimize seeping and leaking at fittings by properly supporting piping and fittings, using flexible connectors or hoses to reduce stress, and installing corrosion-resistant fittings.
3) Consider placing hoses in non-permeable trenches or using drip-less nozzles to reduce repeated small spills.

RESIDENT DROP-OFF CENTER

Not Applicable ☒ Applicable ☐

CONCERN

Resident Drop-Off Centers are publicly accessible facilities where residents can drop off used automotive fluids (i.e. oil or antifreeze), municipal waste, recyclable, and/or organic waste, typically free of charge. Improper transfer or management of the waste materials can allow a number of pollutants including oils and greases, toxic and chemical compounds, nutrients, metals, and other wastes to enter waterways.

POLLUTION PREVENTION MEASURES

General *(applicable to all materials collected)*

1) Clearly identify waste materials accepted by the facility, and clearly mark designated collection areas.
2) Waste material should be inspected by a County representative, prior to disposal.
3) Avoid positioning waste receptacles near storm drains, water bodies, or areas of concentrated runoff.
4) When practical, receiving areas should be covered.
5) Do not allow containers to overflow or waste materials to accumulate on the ground.

Automotive Fluid Collection

1) Used oil, antifreeze, and automotive fluid receiving areas should be on impervious surfaces, covered, and provided with secondary containment, which shall be maintained clean and dry.
2) Provide lidded waste receptacles in the receiving area for the public to dispose of empty containers. Waste receptacles shall be emptied routinely and waste disposed of properly.
3) Collection areas shall be inspected daily and all trash and spilled liquids appropriately cleaned up.
4) The available capacity of waste liquid collection containers shall be routinely verified and waste removals scheduled, as needed.
5) Install appropriate controls to prohibit the overfilling of waste fluid collection containers.
6) Place appropriate spill response equipment in close proximity to drop-off areas.
7) If aboveground tanks are used to collect waste fluids, refer to BMP Fact Sheet GHP-07 (Aboveground Storage Tanks) for additional recommendations.

Organic Debris Collection

1) Routinely transfer collected organic debris/waste to a composting or disposal facility.
2) Do not permit composting of organic waste except at properly designed and permitted facilities.
3) Enact controls to prevent leaves and other windblown debris from entering stormwater inlets.

Municipal Waste / Recyclables Collection

1) Refer to BMP Fact Sheet GHP-01 (Waste Management) for additional recommendations.

BMP Fact Sheet

STOCKPILES

GH-09

Not Applicable ☒ Applicable ☐

CONCERN

The County may stockpile various erodible materials, the type of material can vary depending on the needs of the County. Stockpiled material may include soil, sand, millings, slag, cinders, sawdust, landscaping bark, compost, etc. Exposed stockpiles can easily erode due to wind or precipitation and contribute suspended solids to stormwater runoff.

POLLUTION PREVENTION MEASURES

1) Maintain stockpiles of erodible materials within roofed storage buildings or covered storage bins, if feasible. If not, stockpile material on an impervious surface and cover the stockpile.
2) Temporary stockpiles should be placed on an impermeable membrane (tarp) for quick clean-up.
3) Locate stockpiles away from drain inlets, catch basins, swales, areas of concentrated stormwater flow, water bodies, and environmentally sensitive areas.
4) Divert stormwater flows away from/around the stockpiles using a diversion device (e.g., temporary swale, berm, sandbags, or diversion fence).
5) Cover temporary stockpiles of erodible materials with a tarp that has been adequately secured. The covers must be in place at all times when the stockpile is not in active use.
6) When accessing a portion of the stockpile, only remove a section of the cover to minimize exposure to the elements.
7) Use barriers to isolate stockpiled materials from high-traffic areas to prevent tracking of materials.
8) Sweep (do not wash or hose down) in front of material stockpile storage areas at regular intervals, following loading and unloading activities, and during times of heavy use.
9) If material is observed migrating from the stockpile, clean up all migrated material upon discovery and provide additional controls to reduce migration from the stockpile. If such measures are ineffective implement controls to capture pollutants before they migrate off-site (e.g. silt fencing, inlet filters, filter socks, at-grade inlet protection, etc.).
10) Minimize material stockpile inventory based on historical inventory/usage records and public safety operational needs.
11) Cold mix asphalt shall be stored on and covered with plastic sheeting or comparable material.
12) Routinely inspect outdoor material stockpiles to verify existing controls are functioning properly and for signs of erosion or material transport.

BMP Fact Sheet

DEICING MATERIALS

GH-10

Not Applicable ☒ Applicable ☐

CONCERN

When salt and other de-icing materials are stored outside and uncovered, they have a much higher risk of being eroded and transported offsite by stormwater. Improper de-icing material and sand storage may result in stormwater runoff containing elevated concentrations of sodium chloride and dissolved solids. Sodium chloride (e.g., road salt) is an effective deicer but can be highly corrosive to stormwater facilities. Smaller waterways are at a higher risk to increases in salinity, which can threaten aquatic species. Additionally, runoff containing sodium chloride has the potential to reach drinking water sources where small traces can adversely impact public health.

POLLUTION PREVENTION MEASURES

1) Bagged de-icing chemicals must be stored indoors. If stored outdoors bags must be kept on pallets (off the ground) and covered at all times. Bags must be intact without holes or openings.
2) Bulk de-icing materials shall be stored under cover and on an impervious surface.
3) Bulk salt storage areas/buildings shall not be overfilled so that salt spills out beyond the entrance of the storage area/building.
4) Bulk salt storage areas/buildings shall be maintained in a structurally sound condition and in a way that prevents the release of salt and the infiltration of stormwater. Deicing materials should not touch the sides of metal storage containers.
5) Barriers such as berms, gates, knee walls, tarps, and/or straw bales shall be placed at the entrances of bulk salt storage areas/buildings to prohibit the migration of salt and prevent contact with precipitation/stormwater runoff.
6) Routinely inspect storage areas for migrating materials or deterioration of containment structures. Sweep up all migrating materials upon discovery and repair the source of the migrating pollutant.
7) Loading areas should be constructed of impervious material and covered or enclosed, to the extent practical, to reduce potential contact with stormwater.
8) Minimize the distance de-icing materials are transported during loading/unloading activities.
9) Prevent and/or minimize the spillage of salt and de-icing materials during loading/unloading activities, immediately clean spilled or tracked materials.
10) Sweeping of storage and loading/unloading areas shall be conducted immediately following loading/unloading activities.
11) Do not store de-icing materials (bulk or bagged) over or immediately adjacent to drains or waterways.
12) Control site drainage by diverting stormwater run-on away from storage/loading areas using appropriate measures (e.g., curbing, berms, etc.).
13) Slope storage/loading areas to direct salt-contaminated runoff to an appropriate collection area, and in a manner that prevents the runoff from reaching adjacent soil or surface waters.
14) Excess salt shall be removed from salt handling equipment (trucks, spreaders, etc.) following use/prior to storage. All cleaning shall occur on an impervious surface, which is sloped or curbed to contain any washwater and direct it to a collection area for recycling or proper disposal.

Appendix A

GHP Site Inspection Checklist

GOOD HOUSEKEEPING PLAN (GHP)
SITE INSPECTION CHECKLIST

Facility Name: _____ **Inspection Date:** _____

Inspector Name: _____ **Inspector Signature:** _____

- The intent of this inspection is to ensure that the site is being properly maintained and that there are no visible signs of pollutants entering the stormwater system.
- **A shaded status box designates an item in a non-compliant status. Please provide an explanation for all non-compliant items and subsequently document all corrective actions performed.**
- Retain the completed checklists for five (5) years.

Item	Status			CORRECTIVE ACTIONS/COMMENTS *Items which cannot be corrected immediately must be reported to the GHP/NPDES Program Manager*
	Yes	No	N/A	
GENERAL HOUSEKEEPING				
1. Are exterior areas of the facility free of accumulated trash, debris, and unneeded materials?				
2. Are stormwater drains and inlets free from debris, sediment, and evidence of spills/releases?				
3. Is the facility free from signs of erosion?				
4. Are paved surfaces free of accumulated sediment?				
5. Is spill response equipment available in maintenance areas, fueling areas, hazardous material storage areas, and/or other required areas?				
6. Are spill kits and absorbent materials clearly labeled and accessible (i.e. items are not piled on top of or in front of spill kits)?				
7. Are spill kits secured from being stolen or misused?				
8. Is there a labeled container present for the disposal of used spill cleanup material?				

GOOD HOUSEKEEPING PLAN (GHP)
SITE INSPECTION CHECKLIST

Item	Status			CORRECTIVE ACTIONS/COMMENTS *Items which cannot be corrected immediately must be reported to the GHP/NPDES Program Manager*
	Yes	No	N/A	
9. Does spill response equipment (i.e. spill kits, absorbent materials) need to be replenished?				
WASTE MANAGEMENT				
10. Are areas around solid waste containers/roll-offs/compactors free of excessive trash accumulation or overflowing containers?				
11. Are areas around solid waste containers/roll-offs/compactors free of visible evidence (i.e. leaks, staining) of ongoing stormwater pollution?				
12. Are scrap metal containers in good order and free from evidence of leaking oil/grease?				
13. For dumpsters, roll-offs, and other waste receptacles, where leaks are observed, have appropriate controls (e.g. containment, spill response, etc.) been enacted?				
14. Are the lids (if present) to solid waste containers closed?				
15. Is street sweeping/vactor waste being managed appropriately (i.e. no evidence of material migration)?				
16. Is waste cooking grease managed appropriately (i.e. no evidence of spilled material or excessive staining)?				
VEHICLE & EQUIPMENT STORAGE				
17. Are stored vehicles/equipment free from leaks?				
18. If leaks are present, are they being managed appropriately (drip pan or other methods in place to capture released liquids)?				
19. Are storage areas free of visible evidence of chronic leaks/spills (i.e. significant staining)?				

GOOD HOUSEKEEPING PLAN (GHP)
SITE INSPECTION CHECKLIST

Item	Status			CORRECTIVE ACTIONS/COMMENTS *Items which cannot be corrected immediately must be reported to the GHP/NPDES Program Manager*
	Yes	No	N/A	
VEHICLE & EQUIPMENT REFUELING				
20. Are the areas around refueling areas free from evidence of spills or leaks?				
21. Are refueling areas free of used absorbent material that has not been swept/cleaned up?				
22. Do fuel dispensers and hoses appear to be in good working order and well-maintained?				
VEHICLE MAINTENANCE				
23. Is there any indication that vehicle maintenance activities are being conducted outdoors?				
24. Is there any indication that vehicle maintenance activities are contributing to stormwater pollution?				
VEHICLE & EQUIPMENT WASHING				
25. If performed on-site, does all vehicle/equipment washing occur indoors?				
26. Is wash water collected and disposed of properly?				
27. Is there any indication that vehicle/equipment wash water is being released to stormwater conveyances or pervious areas?				
MATERIAL STORAGE				
28. Are all outdoor storage areas free from visible signs of leaks or spilled material?				
29. Are material storage containers in good condition?				

GOOD HOUSEKEEPING PLAN (GHP)
SITE INSPECTION CHECKLIST

Item	Status			CORRECTIVE ACTIONS/COMMENTS *Items which cannot be corrected immediately must be reported to the GHP/NPDES Program Manager*
	Yes	No	N/A	
30. Are drums, totes, and other containers (that are <u>not</u> empty) stored off the ground and covered, or stored indoors?				
31. Are liquid-containing drums/totes located outdoors provided with secondary containment?				
32. Are containers that are located outdoors equipped with closed lids except when material transfers are occurring?				
33. Are materials, which could impact stormwater, stored away from heavy traffic areas, or protected from vehicle collisions?				
34. Are chemical storage containers properly labeled?				
35. If empty drums are stored outside, are all openings equipped with caps to prevent water intrusion?				
ABOVEGROUND STORAGE TANKS				
36. Are all storage tanks, and surrounding areas free from visible signs of leaks or spilled material?				
37. Do storage tanks appear to be in good working order (e.g. free of obvious signs of damage or malfunctioning equipment)?				
38. Are remote fills associated with tanks free of liquid and debris?				
RESIDENT DROP-OFF CENTERS				
39. Are waste collection areas clearly identified?				
40. Are used oil/antifreeze collection tanks, containment structures, and surrounding areas free from visible signs of leaks or spilled material?				

GOOD HOUSEKEEPING PLAN (GHP)
SITE INSPECTION CHECKLIST

Item	Status			CORRECTIVE ACTIONS/COMMENTS *Items which cannot be corrected immediately must be reported to the GHP/NPDES Program Manager*
	Yes	No	N/A	
41. Do used oil/antifreeze collection tanks appear to be in good working order (e.g. free of obvious signs of damage or malfunctioning equipment)?				
42. Are empty used oil/antifreeze containers being collected and disposed of in the trash?				
43. Are areas around waste/recyclables containers free of excessive trash accumulation or overflowing containers?				
44. Are areas around waste/recyclables containers free of visible evidence (i.e. leaks, staining) of ongoing stormwater pollution?				
45. Are organic debris collection areas free of visible evidence of ongoing stormwater pollution (e.g. leaves and debris in stormwater conveyances)?				
STOCKPILES				
46. Are material piles, including salt, soil, sand, and millings isolated (i.e. covered, bermed, etc.) to prevent stormwater run-on and run-off?				
47. Are areas surrounding material piles (e.g. salt, soil, sand, millings, etc.) free of tracked or migrated material?				
DEICING MATERIALS				
48. Are all deicing materials stored indoors or undercover?				
49. Are salt storage structures in good condition (e.g. no evidence of material escaping or stormwater infiltration)?				
50. Is the salt loading area clean?				

GOOD HOUSEKEEPING PLAN (GHP)
SITE INSPECTION CHECKLIST

Item	Status			CORRECTIVE ACTIONS/COMMENTS *Items which cannot be corrected immediately must be reported to the GHP/NPDES Program Manager*
	Yes	No	N/A	
51. If deicing materials are tarped, is the tarp secure and covering the entire pile?				
52. Are bags of salt stored indoors, or off the ground and covered?				

ADDITIONAL COMMENTS:

Appendix B

GHP Stormwater Conveyance System Inspection Checklist

GOOD HOUSEKEEPING PLAN (GHP)
STORMWATER CONVEYANCE SYSTEM INSPECTION CHECKLIST

Facility Name: _____ **Inspection Date:** _____

Inspector Name: _____ **Inspector Signature:** _____

- The intent of this inspection is to ensure the free flow of stormwater within on-site conveyance systems and prevent damage/flooding.
- **If maintenance is needed, please provide an explanation, and document all corrective actions performed.**
- **Inspections shall include visually accessible infrastructure only; at no time shall inspection personnel enter a confined space.**
- Retain the completed checklists for five (5) years.

Item	Item Checked (Y/N/NA)	Maintenance Needed (Y/N)	CORRECTIVE ACTIONS/COMMENTS *Items which cannot be corrected immediately must be reported to the GHP/NPDES Program Manager*
CATCH BASINS / INLETS			
1. Look for debris and sediment blocking catch basin grates. If found, remove.			
2. Look for damage or cracks to the frame, grate, basin walls or bottom. If found, schedule repairs or replacement.			
3. Look for sediment and debris in the catch basin sump. If sediment fills 60% of the sump or comes within 6” of a pipe it should be scheduled for cleaning.			
4. If any type of filtering device is present, verify that the filter is not clogged, torn, or damaged; clean if clogged, replace if damaged.			
PIPES / CULVERTS			
5. Look for evidence of clogged piping (e.g. visual obstructions, standing water within manholes/inlets structures, etc.). If found, remove or schedule cleaning.			
6. Verify vegetation growth, if present, does not impede water flow. If it does, mow, cut back, or remove.			

GOOD HOUSEKEEPING PLAN (GHP)

STORMWATER CONVEYANCE SYSTEM INSPECTION CHECKLIST

Item	Item Checked (Y/N/NA)	Maintenance Needed (Y/N)	CORRECTIVE ACTIONS/COMMENTS *Items which cannot be corrected immediately must be reported to the GHP/NPDES Program Manager*
7. Inspect for damaged piping, inlets, outlets, headwalls, wingwalls, or excessive erosion. If found, make or schedule repairs.			
DITCHES / TRAPEZOIDAL SWALES			
8. Check for erosion, slumping, or undercutting. If found, make or schedule repairs.			
9. Look for trash and sediment accumulation. Remove all trash and remove sediment if it will impede water flow or clog downstream structures.			
10. Verify vegetation growth does not impede water flow. If it does, mow, cut back, or remove. Remove any trees or shrubs growing within the ditch.			
11. Check the integrity of check dams, filter socks, or other flow dissipation/filtering devices within the ditch or swale. Perform or schedule service if they are clogged, damaged, or deteriorated.			
12. Check inlets and outlets for debris accumulation, damage, or erosion. If found, make or schedule repairs.			

ADDITIONAL COMMENTS:

GUIDANCE DOCUMENT
GOOD HOUSEKEEPING PLAN - STORMWATER CONVEYANCE INSPECTIONS

INTRODUCTION

Maintaining catch basins, stormwater inlets, and other stormwater conveyance structures on a regular basis will remove pollutants, prevent backups, and ensure the system functions as intended to avoid flooding.

Each GHP-covered facility is required to conduct routine stormwater conveyance system inspections to ensure the free flow of stormwater within the conveyance system(s). The GHP includes a *"GHP Stormwater Conveyance System Inspection Checklist"*, to be used when completing the required inspections. This document provides additional background and guidance to aid facility personnel in completing the inspections.

CATCH BASINS / INLETS

Catch basins and inlets are all points for stormwater to enter storm drain systems. These structures are typically part of a larger conveyance system with many interconnected components where the impairment of one component can compromise the functionality of the larger system. Inlets and catch basins are subject to functional impairment by a variety of conditions, including:

- Structural damage including from vehicles and plows
- Cracks/joint separation at piping (inlet and outlet) connections
- Leaking due to cracks and joint separation
- Missing or damaged grates and grate frames
- Corrosion
- Blockage caused by debris, sediment, vegetation, or other objects

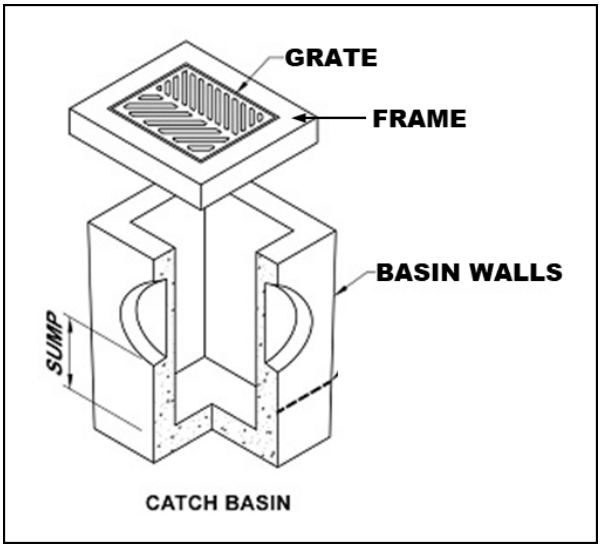

Figure 1 – Catch Basin Diagram

The following photos provide additional information related to the various inspection items, including examples of typical issues that may be encountered. The photo numbers correspond to the inspection checklist item number.

Inspection Item #1 [1]



Debris and sediment blocking inlet/catch basin grate.

Inspection Item #2 [2]



Damaged Grate

Inspection Item #2 [3]



Damaged Frame

Inspection Item #2 [4]



Failing brick walls with a stormwater inlet.

Inspection Item #2 [5]



Failing asphalt surrounding the inlet

[1] Grand Valley State University - https://www.gvsu.edu/groundswell/clogged-storm-drains-71.htm
[2] Georgia Department of Transportation – Stormwater System Inspection and Maintenance Manual, March 2020
[3] https://catchbasinauthority.ca/catch-basin-101/
[4] https://www.fixasphalt.com/catch-basin-repairs
[5] https://ccpia.org/catch-basin-and-manhole-inspections/

Inspection Item #3 [6]



Sediment and debris inside stormwater inlet

Inspection Item #3

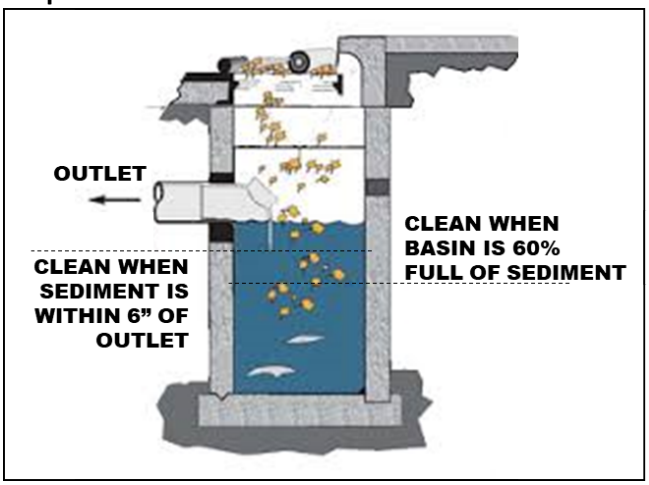

Remove sediment from a catch basin if it fills 60% of the sump or comes within 6" of a pipe.

Inspection Item #4 [7]



Example of inlet filter. Replace when filled or damaged. damaged.

Inspection Item #4 [8]



Example of an inlet filter sock, replace if

PIPES AND CULVERTS

Pipe systems are designed to convey stormwater runoff safely and effectively from inlets to various discharge points and outfalls. A culvert is a structure that channels water under an obstacle such as a roadway or railroad. These structures are subject to functional impairment by a variety of conditions, including:

- Blockage or obstruction due to build up of vegetation, debris, sediment, or other objects
- Cracks and/or joint separation
- Collapsed pipe
- Corrosion
- Root intrusion
- Lack of stabilization

[6] https://www.fixasphalt.com/catch-basin-repairs
[7] https://store.interstateproducts.com/products/Ultra-Drain-Guards/Ultra-Drain-Guard-Adjustable-Frame-Model
[8] https://www.newpig.com/pig-sediment-filter-sock/p/FLT787

Inspection Item #5 [9]



A pipe filled with sediment, inhibiting flow.

Inspection Item #5 [10]



Standing water around an inlet may indicate a blockage.

Inspection Item #6 [11]



Pipe conveyance filled with vegetation.

Inspection Item #7 [12]

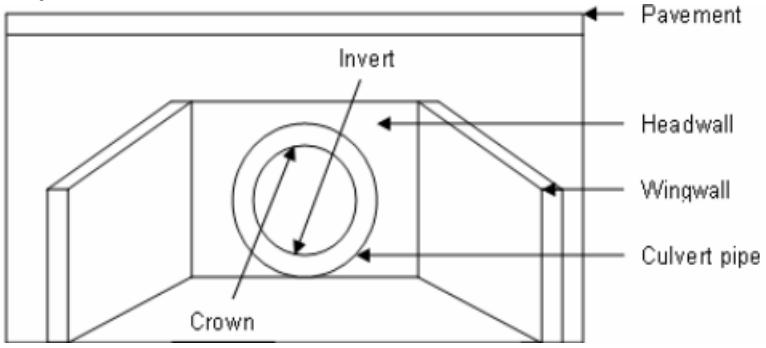

Diagram depicting various components of a culvert.

[9] Georgia Department of Transportation – Stormwater System Inspection and Maintenance Manual, March 2020
[10] https://www3.epa.gov/region9/water/npdes/stormwater-feature.html
[11] Georgia Department of Transportation – Stormwater System Inspection and Maintenance Manual, March 2020
[12] https://www.researchgate.net/figure/Components-of-a-Culvert_fig34_228685906

Inspection Item #7 [13]



A crack is the culvert headwall.

Inspection Item #7 [14]



Evidence of erosion around a culvert.

DITCHES AND SWALES

Ditches and swales serve similar functions. Both are used to convey stormwater. However, there are slight differences. A ditch is a narrow channel typically found along roads and at the edges of parking lots/driveways. A swale is like a ditch, but it is broad and shallow, and usually covered or lined with turfgrass or stone. Issues associated with these structures, which could impede their function include:

- Blockage or obstruction due to vegetation, debris, sediment, or other objects
- Erosion
- Rapidly moving water
- Lack of adequate vegetative cover for grass-lined channels

Inspection Item #8 [15]



Erosion and slumping within a drainage ditch.

Inspection Item #8 [16]



Slumping within a drainage swale.

[13] https://www.sbt-durabi.org/articles/xml/ARN0/
[14] https://lufkindailynews.com/news/local/culverts-crumbling-in-precinct-1/article_a9fed902-4379-5248-ab11-7471e2974298.html
[15] https://graniteseed.com/blog/how-to-stop-a-ditch-from-eroding/
[16] https://www.mnwcd.org/erosion-control

Inspection Item #9 [17]



Litter and debris within a ditch.

Inspection Item #9 [18]



Litter and debris within a swale.

Inspection Item #10 [19]



Cracks and joint separation in concrete channels, removal of vegetation may prevent future damage.

Inspection Item #11 [20]



Rock check dam across a channel.

Inspection Item #11 [21]



Filter sock check dams across a grass swale.

[17] https://craven.ces.ncsu.edu/2023/02/for-those-who-love-to-litter/
[18] https://www.cityoftulsa.org/government/departments/public-works/stormwater-quality/adopt-a-stream/
[19] Georgia Department of Transportation – Stormwater System Inspection and Maintenance Manual, March 2020
[20] EPA Stormwater Best Management Practice, Check Dams, December 2021
[21] EPA Stormwater Best Management Practice, Check Dams, December 2021

Inspection Item #12 [22]



Inlet to a rock-lined swale.

Inspection Item #12 [23]



Sediment accumulation at swale inlet.

END OF DOCUMENT

[22] https://www.stormwater.com/erosion-control/vegetation-management/article/13016118/inlet-protection-during-constructionand-after

[23] https://www.stormwater.com/erosion-control/vegetation-management/article/13016118/inlet-protection-during-constructionand-after

Appendix C

General Spill Response Procedures

SPILL RESPONSE AND NOTIFICATION PROCEDURES

A. Discovery of a Spill

1. Upon discovery of a spill, facility personnel should immediately assess the situation and determine if the spill is considered a "Minor" or "Major" spill. For a spill to be considered "Minor" all the following conditions must be satisfied:

    - ❖ The type of material spilled is known;
    - ❖ The spill is confined to the immediate work area;
    - ❖ The spill has not reached storm drains, sanitary sewer systems, open water, or surrounding soils;
    - ❖ The spill can be safely managed;
    - ❖ The employee can contain and clean up the spill with the PPE that is normally used in the work area;
    - ❖ The spill does not pose a serious threat of fire or an explosion; and
    - ❖ The spill does not pose conditions that are immediately dangerous to life or health.

2. If all the above conditions are met, the spill is considered "Minor". Refer to ***Section B*** of this document for appropriate response actions.

3. If all the above conditions are not met, then the spill is considered "Major". Refer to ***Section C*** of this document for appropriate response actions.

4. If a spill involves flammable liquids, ignitable vapors may be present - precautions must be taken to prevent ignition. Do not turn on or off equipment since sparks may be generated. Additionally, avoid the movement of equipment that could create static electricity. Larger spills of flammable liquids could pose a fire threat and would be considered a "Major" spill. Refer to ***Section C*** for appropriate actions.

B. Response to a "Minor" Spill

1. Identify the source of the spill and the direction in which the spill is heading.

2. Attempt to stop the spill at the source. Where applicable, the source of the spill shall be taken out of service until repairs can be made. If the spill is related to a fuel dispensing system, activate the Emergency Shut-Off (ESO) switch to prevent additional fuel disbursements.

3. If material is released outside a containment area, it is crucial that the material be contained as quickly as possible. Following proper safety procedures, use absorbent materials or diking to contain the spill. Prevent the spill from reaching storm drains, sanitary sewers, or open water. If a spill is flowing toward a drain, install temporary diking around the drain, block off the drain with a drain cover, or place absorbent material around the drain to prevent a discharge.

4. Once the spill has been stopped and contained, estimate the quantity of the spill. Consult applicable Safety Data Sheet (SDS) for material compatibility and environmental precautions. Note and follow recommendations regarding special precautions, spill response equipment, methods, or precautions. All cleanup work shall be conducted in accordance with existing safety protocols and SDS recommendations. Contact the facility Superintendent/Supervisor, or designee, for assistance if needed.

5. Recover or clean up the spilled material as much as possible. Material that cannot be reused must be discarded in accordance with state and federal regulations. Liquids absorbed by porous materials (e.g., wood, gravel, significant quantities of absorbent material, etc.) shall be placed into US DOT-approved 30-gallon or 55-gallon steel drums. Following cleanup, the container shall be secured and appropriately labeled to identify the contents and the date of the spill/cleanup. Containers shall be stored indoors and provided with secondary containment until transported off-site for disposal.

6. For spills that do not involve flammable liquids or other potential hazardous wastes, small quantities of used absorbent materials may be double bagged and disposed of along with municipal trash as long as all liquids have been absorbed (no free liquid may be present).

7. If the spilled material is a flammable liquid, corrosive liquid (pH ≤ 2 or ≥ 12.5), or other potential hazardous waste, all recovered product, impacted material, and used absorbent must be placed into a US DOT-approved containers/drums. Following cleanup, the container(s) shall be secured and appropriately labeled to identify the contents and the date of the spill/cleanup. Containers shall be stored indoors and provided with secondary containment until transported off-site for disposal. The facility Superintendent/ Supervisor, or designee shall be notified that a potential hazardous waste was released and that a waste characterization may be needed to facilitate proper disposal.

8. Surfaces that are contaminated by the spill shall be cleaned utilizing dry absorbent material. Tools and equipment that have been used in the cleanup must be decontaminated immediately after use. Decontamination water (if used) must be minimized, containerized, and disposed of properly.

9. If waste requires disposal, notify the facility Superintendent/Supervisor, or designee who will arrange for the proper characterization and disposal of any waste material. Representative sampling and analysis may be necessary to properly characterize the waste. The waste must be transported and disposed of in compliance with all applicable laws and regulations. Waste manifests, trip tickets, or bills of lading (if required) for waste disposal shall be kept on file.

10. Facility personnel shall restock/replace spill response equipment and absorbent materials used during the clean-up efforts.

11. The facility Superintendent/Supervisor, designee, or other appropriate County personnel shall be notified of the spill in accordance with ***Section D*** of this document.

C. Response to "Major" Spill

A "Major" spill is any discharge that does not meet the definition of a "Minor" spill. Any employee or contractor observing, being involved with, or recognizing a potential or actual spill of oil or other hazardous material, other than a "Minor" spill is responsible for performing the following actions:

1. If there is no danger to human health, attempt to stop and contain the spill at the source. If the spilled material is unknown, if PPE other than that which is typically used in your work area, is necessary to approach the spill area, or if assistance is required to stop the spill, do not attempt to contain the spill. If the spill is related to a fuel dispensing system, activate the Emergency Shut-Off (ESO) switch.

2. Most County employees lack the appropriate training to respond to "Major" spills. If the spill is of an unknown substance, is of a quantity that cannot be safely managed, or poses other risks beyond the training level of the employee, the employee should not attempt to contain or clean up the spill.

3. Evacuate individuals from the area and keep personnel away from the impacted area.

4. Immediately notify the facility Superintendent/Supervisor, or designee of the incident. The notified individual will determine the need for further evacuations and contact emergency response personnel (911), as necessary. *If a situation represents an immediate and grave danger to personnel, the public, structures, or other infrastructure, the individual discovering the incident may call 911 directly without first notifying facility management.*

5. The facility Superintendent/Supervisor or designee will determine if assistance from emergency response contractors is required to clean up the incident and will coordinate such spill response efforts with spill response contractors and other County agencies and first responders.

6. Facility personnel will provide assistance to emergency responders, as appropriate.

D. Reporting a Spill (Internal Notifications)

1. Once a spill is contained and cleanup operations have been initiated, the individual discovering the spill shall notify the appropriate County representatives and provide the following information:

    a) Identify the location, date, and time of the incident;
    b) Identify the type of material spilled or discharged;
    c) Estimate the quantity spilled and the rate of the spill;
    d) Identify the cause of the spill or discharge;
    e) Identify impacted media or infrastructure (soil, storm drains, open water bodies, etc.);
    f) Determine the extent of injuries involved; and
    g) Provide response measures implemented by the facility personnel.

E. Reporting a Spill (Regulatory Notifications)

State of Maryland Reporting Requirements (COMAR 26.10.01.05)

1. Upon discovery of a spill, the Responsible Person shall notify the MDE Emergency Response Division **within two (2) hours** by calling 866-633-4686. The caller shall be prepared to provide the following information:

    a) The time and date of the spill;
    b) The location and cause of the spill;
    c) The mode of transportation or type of facility involved;
    d) Type and quantity of oil spilled;
    e) Details regarding any assistance required;
    f) The name, address, and telephone number of the person making the report; and
    g) Any other pertinent information requested by the Department.

2. MDE will provide further guidance on additional responsibilities.

3. Within **ten (10) working days** of the completed removal and clean-up activities, the Responsible Person shall prepare a report using either County letterhead detailing the incident. The report shall contain the following:

    a) Date, time, and place of the spill;
    b) The amount and type of oil or hazardous substance spilled;
    c) A complete description of circumstances that contributed to the spill;
    d) A complete description of the containment and removal operations performed, including disposal sites to which oil refuse was transported;
    e) Procedures, methods, and precautions instituted to prevent the recurrence of an oil spill from the facility involved;
    f) Any other information considered necessary or required by the MDE for a complete description of the incident; and
    g) A certification that the information provided is true and correct to the knowledge of the person signing the report.

4. The completed report shall be submitted to mdeerd.mema@maryland.gov or faxed to 410-537-3932.

5. A digital copy of the completed report and any accompanying documentation shall be retained

Federal Reporting Requirements - National Response Center (40 CFR 110)

1. If any of the following criteria are met the Responsible Person shall notify the National Response Center (NRC) **within two (2) hours** of the spill discovery by calling 800-424-8802 or 202-426-2675.

    - ❖ The spill has caused a film, sheen, or discoloration of the surface water or shorelines;
    - ❖ The material spilled will violate applicable water quality standards (surface water or groundwater); or
    - ❖ The spill has caused a sludge or emulsion to be deposited beneath the surface of the water or on the shoreline.

2. At a minimum, the following information shall be provided to the NRC:

    a) Name, organization, and telephone number of reporting party;
    b) Name and address of the responsible party;
    c) Date, time, and location of the incident;
    d) Source and cause of the discharge;
    e) Type of material(s) discharged;
    f) Quantity of materials discharged;
    g) Danger or threat posed by discharge;
    h) Number and types of injuries (if any);
    i) Weather conditions at the incident location; and
    j) Other information to help emergency personnel respond to the incident.

3. If unable to report to the NRC, reports can be made to the EPA Regional Office at 800-438-2474 or the U.S. Coast Guard (USCG) at 202-372-1001. The NRC, EPA, or USCG will provide further guidance.

4. A digital record of the NRC notification and any accompanying documentation shall be retained on-site.

Federal Reporting Requirements - EPA Regional Administrator (40 CFR 112.4)

1. If the facility where the spill occurred is regulated under 40 CFR 112 and is required to have a Spill Prevention, Control, and Countermeasures (SPCC) Plan, the Responsible Person shall report the spill to the EPA Region III Administrator when any of the following criteria are met:

   - ❖ More than 1,000 gallons of oil is discharged to navigable waters or adjoining shorelines in a single incident; or
   - ❖ More than 42 gallons of oil is discharged to navigable waters or adjoining shorelines in each of two incidents occurring within any twelve-month period.

2. The report shall be made in writing **within 60 days** of the spill and shall contain:

   a) Name and location of the facility;
   b) Owner/operator name;
   c) Maximum storage/handling capacity of the facility and normal daily throughput;
   d) Corrective actions and countermeasures taken;
   e) Adequate description of the facility including maps, and flow diagrams;
   f) Cause of the discharge to navigable waters, including a failure analysis;
   g) Additional preventative measures taken or planned to minimize discharge reoccurrence; and
   h) Other information required by the EPA Regional III Administrator.

3. The report shall be submitted to the EPA Regional Administrator at the following address:

   EPA Regional Administrator
   US EPA Region 3
   1650 Arch Street (3RA00)
   Philadelphia, PA 19103-2029

4. A copy of the report shall be retained in the facility SPCC Plan.

Appendix D

Training Records

GOOD HOUSEKEEPING PLAN (GHP)
TRAINING ATTENDANCE LOG

FACILITY NAME: _____

DATE	NAME *(PRINT)*	SIGNATURE

By signing I affirm that I have completed the required annual training; and I am aware of and understand my responsibilities under this Plan.

GOOD HOUSEKEEPING PLAN (GHP)

Harford Technical High School
200 Thomas Run Road
Bel Air, MD 21015

June 30, 2025

TABLE OF CONTENTS

1.0 BACKGROUND & INTRODUCTION 1
1.1 Objectives 1
1.2 Potential Stormwater Pollutants 1
2.0 RESPONSIBILITIES 3
2.1 GHP Implementation 3
2.2 Plan Review and Modification 3
2.3 Inspections 3
2.3.1 GHP Site Inspections 3
2.3.2 Conveyance System Inspections 4
2.4 Training 4
3.0 BEST MANAGEMENT PRACTICES (BMPs) 5
3.1 Applicability of BMP Fact Sheets 5
3.2 BMP Fact Sheets 5

List of Tables

TABLE 1-1 POTENTIAL STORMWATER POLLUTANTS AND THEIR SOURCES 2

List of BMP Fact Sheets

GH-01 - Waste Management
GH-02 - Vehicle and Equipment Storage
GH-03 - Vehicle/Equipment Refueling
GH-04 - Vehicle Maintenance
GH-05 - Vehicle/Equipment Washing
GH-06 - Material Storage
GH-07 - Aboveground Storage Tanks
GH-08 - Resident Drop-Off Centers
GH-09 - Stockpiles
GH-10 - Deicing Materials

Appendices

Appendix A: GHP Site Inspection Checklist
Appendix B: GHP Stormwater Conveyance Inspection Checklist
Appendix C: General Spill Response Procedures
Appendix D: Training Records

List of Acronyms

AST	-	Aboveground Storage Tank
BMP	-	Best Management Practice
CFR	-	Code of Federal Regulations
GHP	-	Good Housekeeping Plan
MDE	-	Maryland Department of the Environment
MS4	-	Municipal Separate Storm Sewer System
NPDES	-	National Pollutant Discharge Elimination System
SPCC	-	Spill Prevention, Control, and Countermeasure Plan

1.0 BACKGROUND & INTRODUCTION

Polluted stormwater runoff has the potential to enter the County's storm sewer systems (referred to as a municipal separate storm sewer system or MS4), and then discharge, untreated, into local water bodies. To address this potential stormwater pollution, the County is required to obtain a NPDES permit from the Maryland Department of the Environment (MDE). The NPDES Permit requires the County to take actions to prevent stormwater pollution, maintain storm sewer systems, monitor stormwater discharges, and develop and implement comprehensive management programs to minimize the discharge of pollutants from the storm sewer system.

To comply with Part IV.D.4.b of the County's Phase I MS4 Permit, the County must develop, implement, and maintain a Good Housekeeping Plan (GHP) for certain County-owned properties not required to be covered under Maryland's General Permit for Discharges from Stormwater Associated with Industrial Activities *(General Permit 12-SWA / 20-SW).*

To support this effort, a *"Good Housekeeping Plan Applicability Certification"* has been developed to evaluate and document if a specific County-owned facility is subject to the GHP requirements. The *"GHP Applicability Certification"* includes the following ten (10) potential stormwater polluting activities. If any of the covered activities are performed at the facility, then that facility is required to implement a site-specific GHP. The GHP will include each of the potential stormwater polluting activities identified in the *"GHP Applicability Certification"* and corresponding pollution prevention procedures.

- Waste Management
- Vehicle and Equipment Storage
- Vehicle/Equipment Refueling
- Vehicle Maintenance
- Vehicle/Equipment Washing
- Material Storage
- Aboveground Storage Tanks
- Resident Drop-Off Center
- Stockpiles
- Deicing Materials

1.1 Objectives

The GHP was developed to outline suitable practices, procedures, and protocols, or Best Management Practices ("BMPs") for reducing and/or preventing stormwater pollution associated with operations at covered County-owned properties. The intent of the pollution prevention procedures included in the GHP is to limit the release of materials with the potential to impact stormwater, this includes reducing or eliminating (to the extent practical):

- The occurrence of spills and leaks;
- The accidental dumping or release of materials;
- The accumulation of waste, trash, debris, unused parts/equipment, etc.;
- The exposure of hazardous materials to precipitation/run-off;
- Stormwater run-off contamination by improperly stored materials; and/or
- Illicit discharges to the storm drain system.

1.2 Potential Stormwater Pollutants

Table 1-1 on the following page provides a list of common potential pollutants that may result from the GHP-regulated activities identified above. Understanding the sources of these pollutants can help in achieving the goals and objectives of the GHP program.

TABLE 1-1 POTENTIAL STORMWATER POLLUTANTS AND THEIR SOURCES

		Waste Management	Vehicle/Equipment Storage	Vehicle/Equipment Refueling	Vehicle Maintenance	Vehicle/Equipment Washing	Material Storage	Aboveground Storage Tanks	Resident Drop-Off Center	Stockpiles	Deicing Materials
Pollutants	**Sources**	**Associated GHP Activity**									
Sediment	Land disturbance; erosion; paved surfaces; material stockpiles; waste storage; salt/abrasive application	X				X	X		X	X	X
Hydrocarbons *(petroleum compounds)*	Leaking vehicle and equipment; vehicle and equipment cleaning; spills; improper storage; maintenance activities; scrap metal disposal; improper disposal	X	X	X	X	X	X	X	X		
Metals	Vehicle brake and tire wear; vehicle/equipment exhaust; batteries; galvanized metal; paint and wood preservatives; fuels, pesticides, and cleaners; vehicle fueling, maintenance, and washing; industrial waste	X	X	X	X	X	X	X	X		
Toxic Chemicals	Pesticide application; improper chemical storage; leaks and spills from storage containers; leaking vehicles; maintenance activities	X	X		X	X	X	X	X		
Chlorides	De-Icing chemicals										X
Trash/Debris	Improper waste storage and disposal; leaking trash containers; littering; poor housekeeping	X	X				X		X		
Nutrients (nitrogen and Phosphorus)	Fertilizers; malfunctioning septic systems; sewer overflows; animal/pet waste; vehicle washing; decaying grass and leaves; leaking trash containers; atmospheric deposition	X				X	X		X		

2.0 RESPONSIBILITIES

2.1 GHP Implementation

A separate GHP is required for each covered facility. The following individual *(identified by name and/or title)* is accountable for the administration and implementation of the GHP at this facility and has the authority to commit the necessary resources to implement this Plan.

_____

Name and/or Title of Responsible Person

The Responsible Person listed above shall ensure that facility personnel involved in any GHP-covered activities identified in this Plan, are provided with access to, and are familiar with, the contents of this Plan.

2.2 Plan Review and Modification

The *"GHP Applicability Certification"* completed for this facility must be reviewed and updated once every permit term, or within one (1) year of substantial changes to a facility's operations that could reasonably contribute to stormwater pollution. Any newly constructed/acquired facility must be assessed within one (1) year of initiating operations at the facility. The facility's GHP must be amended and reissued to the facility within one (1) year of any changes to the facility's *"GHP Applicability Certification"*.

When warranted, the BMP Fact Sheets provided in Section 3.0 may need to be updated or revised. At the same time, additional BMP Facts Sheets may be added. The need for such updates or modifications will be at the discretion of the County's GHP Program Administrator.

2.3 Inspections

The County's MS4 permit requires each facility covered by a GHP to have the following:

1. Written procedures for annually assessing County properties to prevent the discharge of pollutants, spills, and leaks into the County's storm sewer system; and

2. Written procedure for performing stormwater conveyance system inspections and for removing debris that may cause clogging, backups, and flooding.

To meet these requirements, each facility that is covered by a GHP will be required to complete routine site inspections and stormwater conveyance system inspections as detailed below. Facility management will be responsible for ensuring the necessary inspections are completed within the required timeframes, that corrective actions (if needed) are performed, and that records of inspections and completed corrective actions are maintained for at least five (5) years.

2.3.1 GHP Site Inspections

The GHP Site Inspection will be performed to ensure that each GHP-covered facility is being properly maintained and that there are no visible signs of pollutants entering the stormwater system. GHP facilities shall utilize the *"GHP Site Inspection Checklist"*, provided in ***Appendix A*** to complete the required inspection. At a minimum, each facility is to be inspected every five (5) years.

2.3.2 Conveyance System Inspections

Stormwater conveyance systems are generally comprised of curbs and gutters, catch basins, inlet structures, swales, channels, piping, culverts, detention ponds, outfalls, or other structures that are used to collect, contain, and convey stormwater runoff.

The unimpeded movement of stormwater through conveyance systems is critical in avoiding backups and flooding, which can impede facility operations and damage property. Routine inspections and preventative care of stormwater conveyance systems can ensure these systems function as intended and prevent the need for costly and time-consuming repairs and retrofits.

Each GHP-covered facility is required to conduct routine stormwater conveyance system inspections to ensure the free flow of stormwater within the conveyance systems. GHP-covered facilities shall utilize the *"GHP Stormwater Conveyance System Inspection Checklist"*, provided in ***Appendix B*** to complete the required inspections. At a minimum, facility conveyance system inspections are to be conducted every five (5) years.

2.4 Training

As part of the GHP requirements within the County's Phase I NPDES permit, annual training must be provided to all appropriate staff and contractors. Such training shall be provided to any individuals responsible for implementing the GHP, performing the required inspections, or involved in any of the GHP-covered activities identified in this Plan. The required training shall focus on the duties and responsibilities assigned to site personnel in implementing the GHP and the best management practices (BMPs) prescribed in this Plan for preventing, reducing, and eliminating the discharge of pollutants during facility activities.

The County's MS4/GHP Program Coordinator will be responsible for developing the required training and disseminating it to GHP-covered facilities. Each GHP-covered facility will be responsible for identifying staff/contractors who must attend annual training, ensuring identified staff complete the required training, and maintaining records that document training dates and attendees. Training records and other documentation shall be maintained in ***Appendix D*** of this Plan.

3.0 BEST MANAGEMENT PRACTICES (BMPs)

This section contains a BMP Fact Sheet for each of the ten (10) GHP-regulated activities. The County's operations are not limited to the BMPs contained within this document; nor is the County required to implement all of the pollution prevention measures identified within each BMP Fact Sheet. The County should select and implement those measures that are applicable and have the greatest potential for reducing stormwater pollution.

The BMP Fact Sheets contained within this document offer recommended protocols for a particular activity. These pollution prevention measures are considered non-structural BMPs with a focus on source control of potential pollutants.

3.1 Applicability of BMP Fact Sheets

The *"GHP Applicability Certification"* completed for this facility has identified the activities conducted at this facility that require coverage under this Plan. Each of the BMP Fact Sheets shall be marked as to whether they are applicable or not applicable to this facility. The Applicable/Not Applicable indicator on each BMP Fact Sheet can be revised in response to changes in operations at the facility.

3.2 BMP Fact Sheets

BMP Fact Sheets can be found on the following pages. For the sake of consistency, the general outline of a BMP Fact Sheet will be as follows:

- Identification of GHP-covered activity.
- Applicability of the BMP Fact Sheet to the facility.
- A general description of the concern the activity poses to stormwater.
- Recommended pollution prevention measures for reducing/eliminating stormwater pollution.
- Additional sources of information, if applicable.

BMP Fact Sheet

WASTE MANAGEMENT

GH-01

Not Applicable ☒ Applicable ☐

CONCERN

Improperly managed waste can allow trash and debris to be washed into storm drains which poses a concern to water quality, marine life, and public health. It also has the potential to create obstructions in the drainage system, which can lead to backups and flooding. Additionally, improper storage and handling of waste materials can allow pollutants including oils and greases, toxic and chemical compounds (including nutrients), bacteria, metals, and other potentially hazardous wastes to enter waterways.

POLLUTION PREVENTION MEASURES

General *(applicable to all waste management activities)*

1) Provide suitable containers, preferably with working covers, to collect waste materials.
2) Ensure that appropriate waste containers are available in areas where waste is generated.
3) Provide a cover over waste storage areas, if feasible.
4) Avoid positioning waste receptacles near storm drains, water bodies, or areas of concentrated runoff.
5) Ensure that lids to waste containers *(if present)* are kept closed to prevent the intrusion of precipitation and prevent trash from blowing out of the receptacle.
6) For waste receptacles, which do not have lids and could leak, containers should be inspected regularly and controls (e.g., containment, spill response, etc.) shall be enacted whenever leaks or dry-weather discharges are observed.
7) Routinely inspect waste containers, roll-offs, compactors, and other waste receptacles for the presence of excessive waste accumulation and overflowing containers.
8) Ensure that wastes accumulating on the ground are placed in a suitable waste container.
9) Ensure that wastes are removed from the facility regularly by a licensed and contracted vendor.
10) Repair or replace damaged waste container lids.

Trash Compactors

1) Routinely inspect trash compactors for malfunctioning equipment or leaking hydraulic oil and provide the appropriate spill response if leaking equipment is encountered.
2) Regularly inspect compactors for leaking fluids and implement appropriate controls such as spill response/cleanup, collection or diversion of released fluids, providing secondary containment, etc. whenever leaks or dry-weather discharges are observed.

Scrap Metal Collection Containers

1) Avoid placing oily or grease-covered items in uncovered scrap metal recycling collection containers. If needed, wrap oily/greasy items in plastic garbage bags before placing them in the collection container.

Hazardous/Universal Wastes

1) Ensure that hazardous waste and universal wastes (e.g., batteries, bulbs, etc.) are collected and stored indoors or within covered collection containers.
2) Verify that hazardous/universal waste collection containers are in good condition, not leaking, and compatible with the wastes being stored.

Street Sweeping / Vactor Truck Material Storage

1) Do not site storage areas near storm drains, open water bodies, or areas of concentrated runoff.
2) Install sediment control devices (e.g. silt fence, silt socks, hay bales, etc.) around the staging area. Inspect these controls regularly and replace them as needed.
3) Cover the materials staging area, if feasible.
4) Provide oil-absorbent booms if necessary to control oily discharge. Inspect and replace booms regularly.
5) The staging area should be checked periodically for evidence of sediment migrating outside of the staging area. Material that has migrated out of the staging area should be promptly swept and returned to the staging area or disposed of.

Waste Cooking Oil/Grease

1) Maintain storage containers indoors or within a covered location, if feasible.
2) Storage containers shall be secured to prevent infiltration of precipitation and accidental/intentional spills or releases.
3) Carefully transfer waste oil/grease to the appropriate collection container to avoid spills.
4) Maintain suitable spill response equipment near collection containers. Immediately clean up any spilled oil/grease. Keep the exterior of the collection container clean and free of spilled oil/grease.
5) Provide secondary containment for collection containers, if feasible.

BMP Fact Sheet

VEHICLE AND EQUIPMENT STORAGE

GH-02

Not Applicable ☒ Applicable ☐

CONCERN

Vehicles and equipment may be stored onsite to support various County operations (e.g., construction, maintenance, snow removal, roadside assistance, mass transit, mowing, etc.). Examples of County owned and operated vehicles and equipment stored onsite at any given time include but are not limited to, the following: cars, trucks, buses, emergency response vehicles, garbage trucks, heavy equipment (backhoes, frontend loaders, etc.), forklifts, towable generators, portable light stands, and roadside equipment. Vehicle and equipment storage is considered a pollutant source due to the potential for incidental releases of petroleum products, lubricants, and various automotive fluids.

POLLUTION PREVENTION MEASURES

1) When possible/practical, store vehicles and equipment inside or under cover to prevent exposure to precipitation.
2) If vehicles or equipment must be stored outside, store vehicles/equipment in designated areas away from areas of concentrated runoff, storm drains, and other stormwater conveyances.
3) Vehicles and equipment shall be staged on impervious (asphalt or concrete) surfaces;
4) Keep truck beds clean and ensure potential stormwater pollutants are stored in closed containers, covered, or otherwise protected from stormwater exposure.
5) Conduct routine visual inspections of vehicles and equipment for the presence of leaks and respond accordingly.
6) Leaking vehicles/equipment should be moved inside or under cover. At a minimum, drip pans or absorbent pads shall be used to contain the leak until the vehicle/equipment can be relocated and the leak addressed.
7) Drain all fluids from wrecked or heavily damaged vehicles and equipment before storage.
8) Have an adequate supply of appropriate spill response equipment readily available and clean up all spills and leaks immediately utilizing dry cleaning techniques (e.g. absorbents and brooms).
9) Train staff in spill response so that incidents are addressed in a timely fashion.
10) Do not wash down areas where leaks have collected on ground surfaces; use dry cleaning methods such as granular absorbents and brooms.

VEHICLE AND EQUIPMENT REFUELING

Not Applicable ☒ Applicable ☐

CONCERN

Refueling activities associated with County vehicles and equipment can result in a discharge of fuel (gasoline and diesel fuel), which has the potential to enter the storm drain system and/or a nearby waterway. Such releases can introduce hydrocarbons, metals, and other toxic chemicals to stormwater runoff.

POLLUTION PREVENTION MEASURES

General Procedures *(applicable to all refueling activities)*

1) Routinely *(at least daily)* inspect the fuel dispensing area for any spills or leaks.
2) Routinely inspect fuel dispensing equipment looking for leaking or damaged equipment. Damaged or malfunctioning equipment shall be taken out of service until it has been repaired.
3) Fuels will only be dispensed into authorized vehicles, equipment, and approved containers.
4) Vehicle operators must remain outside of their vehicles and in attendance of fuel dispensers at all times while dispensing fuel.
5) Third-party contractors must be trained in proper refueling procedures and pollution prevention.
6) Do not utilize a foreign object to keep the dispenser nozzle in the open position. If present, a "hold-open" latch on the nozzle may be used.
7) Do not "top off" a vehicle's fuel tank once the dispenser nozzle's automatic shut-off has been activated. Topping off tanks may result in spills. Post signs in fueling areas warning vehicle operators against "topping off" of vehicle fuel tanks.
8) After refueling has stopped, allow several seconds to pass before removing the nozzle and returning it to the dispenser. This will prevent incidental dripping from the nozzle.
9) Employees refueling vehicles shall note the location of the "Emergency Fuel Shut Off" switch, to be used to stop the flow of fuel to the dispensers in the event of a release or emergency.
10) Have an adequate supply of appropriate spill response equipment readily available and clean up all spills immediately utilizing dry cleaning techniques (e.g. absorbents and brooms).
11) Immediately clean up and dispose of used absorbent material.
12) Do not wash down fueling areas; use dry cleaning methods such as granular absorbents and brooms.
13) Conduct refueling activities over impervious (e.g. concrete) surfaces. Place drip pans or absorbent pads under the nozzle if fueling occurs over a permeable surface such as grass or soil.
14) Install oil control devices in storm drains that may receive contaminated runoff from fueling areas.
15) Cover fueling areas with a canopy or roof to prevent direct contact with rainfall. Direct run-on away from fueling areas and collect fueling area run-off in a dead-end sump or oil-water separator.

Mobile Equipment Refueling

1) Refuel equipment on an impervious surface, downgradient of, and at the farthest practical distance from any storm drain, stormwater conveyance, stormwater management feature, or waterway.
2) Utilize secondary containment when refueling equipment (when practical).
3) Ensure mobile refuelers are parked in designated locations and away from areas of concentrated run-off, storm drains, and other stormwater conveyances.
4) Ensure that procedures are in place and that staff is properly trained in spill response/cleanup so that leaks and spills are addressed appropriately and promptly.

BMP Fact Sheet

VEHICLE MAINTENANCE

GH-04

Not Applicable ☒ Applicable ☐

CONCERN

Vehicle and equipment maintenance can impact the water quality of nearby waterways by exposing stormwater to various pollutants including petroleum hydrocarbons, solvents, antifreeze/coolants, used oil, lubricating oil, grease, brake fluid, metals, and various chemicals. Additionally, vehicles that are wrecked or awaiting repair can be a source of pollution if leaking fluids are not properly controlled.

POLLUTION PREVENTION MEASURES

1) Conduct vehicle and equipment maintenance activities indoors.
2) Make sure incoming vehicles and equipment are inspected for leaking fluids and oil.
3) Move leaking vehicles or equipment indoors or under cover as soon as possible. At a minimum, a drip pan or absorbent pads shall be utilized to contain the leak until the vehicle/equipment can be relocated and the leak addressed.
4) Avoid performing maintenance on vehicles in close proximity to exterior doorways, which may allow released fluids to migrate outdoors.
5) Have an adequate supply of appropriate spill response equipment readily available and clean up all spills and leaks immediately utilizing dry cleaning techniques (e.g. absorbents and brooms).
6) Keep maintenance areas neat and well organized. Remove dirt, debris, and used absorbent regularly.
7) Inspect maintenance areas as well as maintenance equipment on a routine basis.
8) Store vehicles, parts, and generated wastes indoors or off the ground and under cover whenever possible. When practical, provide secondary containment.
9) Promptly transfer used fluids to the proper waste container; do not leave full drip pans or other open containers around the shop. Empty and clean drip pans and containers regularly.
10) Waste liquids shall not be poured into floor drains, sinks, outdoor storm drain inlets, or other storm drains or sewer connections. Liquid wastes are to be collected in properly labeled containers and disposed of by a licensed waste hauler or other appropriate method.
11) Store leaking batteries in a sealed container and provide secondary containment, if feasible.
12) Clean all parts indoors utilizing a self-contained parts washer.
13) Do not hose down indoor service areas to storm drains or areas where it can seep into groundwater.
14) Maintain floor drains in good working order and inspect for proper function on a routine basis. Consider plugging floor drains that discharge to the storm sewer.
15) Ensure oil/water separators (if present) are maintained in proper working order and are checked on a routine basis for the presence of oil.
16) If maintenance work must be performed outdoors, adhere to the following requirements:
    - Conduct maintenance activities over an impervious surface, away from stormwater inlets.
    - Cover outdoor maintenance areas and direct stormwater run-on away from the area.
    - Use drip pans or drop cloths underneath the equipment to catch leaks and drips.
    - Have an adequate supply of appropriate spill response equipment readily available.
    - Clean all spills immediately using dry cleaning techniques (e.g. absorbents and brooms).
    - Avoid performing maintenance activities during precipitation events.
    - Limit temporary outdoor maintenance activities to a single shift/day if additional time is needed to cover the work area at the end of each day/shift.

VEHICLE AND EQUIPMENT WASHING

Not Applicable ☒ Applicable ☐

CONCERN

Vehicle and equipment washing can generate washwater that contains oil, grease, organic compounds, surfactants, phosphates, metals, and suspended solids. If vehicles/equipment are washed outdoors on impervious surfaces, dirty washwater can contaminate stormwater that ends up in waterways. Washing equipment over pervious surfaces can allow washwater to seep into the ground contaminating groundwater.

POLLUTION PREVENTION MEASURES

1) Vehicle and equipment washing should only be conducted in designated indoor wash bays that capture and recycle washwater to the extent practical.
2) Wastewater from the washing facility should be discharged to the sanitary sewer system under the authorization of a wastewater discharge permit issued by the local municipal authority.
3) The floor of indoor vehicle wash bays should be completely bermed or sloped to collect wash water and prevent migration outdoors.
4) No other activities (e.g., fluid changes, repairs, material storage) shall be performed in wash areas.
5) Keep the wash bay neat and well organized. Sweep or pick up all trash and debris daily or as needed.
6) Solid materials accumulated on vehicles or in vehicle beds (e.g. salt, soil, grass, etc.) shall be knocked off or otherwise removed from the vehicle (while inside the wash bay) prior to washing. Solid materials shall be collected and disposed of properly.
7) For vehicles too large to completely fit in the wash bays, only the portion of the vehicle physically located in the confines of the wash bay shall be cleaned. The vehicle shall then be rotated to allow for the remaining portion of the vehicle to be washed.
8) Use nozzles that automatically turn off water when not in use and consider high-pressure, low-volume sprays.
9) Avoid detergents as much as possible. If detergents are necessary, use a biodegradable, phosphate-free detergent.
10) If discharging to an oil-water separator, use a non-emulsifying detergent.
11) Inspect floor drain systems, holding tanks, and conveyances associated with designated wash areas regularly. Maintain oil/water separators and/or process flowthrough separators on a routine basis.
12) Use commercial car washes when vehicle or equipment washing cannot be performed onsite without causing impacts to stormwater.
13) If washing must occur onsite and outdoors, use a designated impervious area that is marked with posted signs indicating proper washing procedures. This area must be bermed to contain the wash water and graded to direct the wash water to the sanitary sewer, an oil-water separator, a holding tank, a dead-end sump, or other containment area. Captured water shall be disposed of properly.
14) Avoid steam cleaning and engine/undercarriage washing which can produce high pollutant concentrations. If steam cleaning or engine washing is necessary, perform such cleanings within isolated indoor areas, and ensure wash water is treated and discharged to the sanitary sewer (if permitted to do so) or captured for off-site disposal.
15) Train staff in proper washing techniques and how to confine washing to designated wash areas.
16) Consider alternatives to washing such as using air to blow grass and debris from small equipment, wet-wiping equipment with rags, etc.

BMP Fact Sheet

MATERIAL STORAGE

GH-06

Not Applicable ☒ Applicable ☐

CONCERN

The storage of petroleum products, chemicals, paints, cleaners, pesticides, fertilizers, bags of erodible materials like sand, cement, and soil, and other potential pollutants can negatively impact surface waters through the accidental releases or leaching of materials into stormwater. Unprotected outdoor storage areas can generate a wide range of stormwater pollutants, such as sediment, nutrients, toxic materials, and petroleum products.

POLLUTION PREVENTION MEASURES

1) Whenever possible, store containers (e.g. drums, bins, bags, cans, and totes) indoors or under cover to limit exposure to stormwater.
2) Designate specific areas for material delivery and storage that are away from heavy traffic areas, storm drains, stormwater conveyances, and areas of concentrated run-off.
3) Designated outdoor storage areas should be paved or consist of an impervious surface.
4) Provide secondary containment for materials whenever possible or required per regulation.
5) Store materials on pallets to prevent stormwater run-on from coming into contact with materials, prevent container corrosion, and allow for better leak detection. Pallets must be in good condition and promptly replaced once damaged or deteriorated.
6) Stack containers according to the manufacturer's recommendations to avoid damage.
7) Immediately replace damaged, corroded, or leaking containers.
8) Ensure all storage containers are clearly labeled with their contents.
9) Keep containers tightly sealed after use.
10) Maintain an accurate inventory of hazardous substances and limit on-site storage to that which is necessary to support facility operations.
11) Keep storage areas neat and well organized; remove debris and unneeded material promptly.
12) If empty drums are stored outdoors, ensure that all openings are equipped with caps to prevent water intrusion and that the drum/storage area is labeled "Empty Drums".
13) Have an adequate supply of appropriate spill response equipment readily available and clean up all spills and releases immediately utilizing dry cleaning techniques (e.g. sweeping/absorbents).
14) Clean up all migrating dry materials upon discovery and address the source of the release.
15) Provide perimeter controls (e.g., berms, rock check dams, etc.) for erodible stockpiles of materials such as mulch, sand, and gravel to prevent migration into the stormwater system.
16) Routinely inspect material storage areas for leaks, material migration, and damaged or corroded containers. Ensure that secondary containment and other perimeter controls are in satisfactory condition.
17) Additional visual inspections of outdoor storage areas should be conducted after significant rainfall events (i.e., greater than 0.5 inches).

BMP Fact Sheet

ABOVEGROUND STORAGE TANKS

GH-07

Not Applicable ☐ Applicable ☒

CONCERN

Aboveground storage tanks (ASTs) may be used to store fuels, automotive fluids, chemicals, or deicing fluids. Leaks from tanks, piping, or other equipment and releases during fluid transfers can all impact stormwater quality. It is critical to maintain ASTs in good working condition to prevent spills and/or releases from occurring. Improperly managed storage tanks can cause significant environmental impacts.

POLLUTION PREVENTION MEASURES

General *(applicable to all storage tanks)*

1) ASTs should be installed and maintained in accordance with COMAR 26.10 and applicable fire codes.
2) ASTs should be provided with secondary containment, whenever feasible or required by regulation.
3) Secondary containment areas shall be maintained clean and dry; drain valves must be kept closed; accumulated liquid shall only be discharged if there are no visible signs of impacts, and in accordance with applicable regulations.
4) Inspect ASTs monthly to identify any leaking or malfunctioning equipment and ensure tanks are functioning as designed.
5) ASTs shall be equipped with a form of liquid-level detection (i.e. sight gauge, electronic monitoring).
6) ASTs shall be equipped with overfill prevention (i.e. overfill alarm and/or overfill prevention valve).
7) Tanks and piping should be protected from vehicle impact via barriers, bollards, guard rails, etc.
8) Install ASTs on solid foundations over impervious surfaces, and away from areas of concentrated run-off, storm drains, and other stormwater conveyances.
9) Properly label all storage tanks (e.g., contents, capacity, etc.).
10) Keep remote fills and fill port spill buckets clean and dry.
11) Keep fill ports, gates, and tank areas secured when not in use to prevent fuel theft and tampering.
12) Have an adequate supply of appropriate spill response equipment readily available and clean up all spills and leaks immediately utilizing dry cleaning techniques (e.g. absorbents and brooms).
13) Facilities that maintain 1,320 gallons or more of aboveground oil products shall prepare and implement a Spill Prevention, Control, and Countermeasure (SPCC) Plan, per 40 CFR 112.
14) Facilities that maintain 1,000 gallons or more of used oil or 10,000 gallons or more of virgin oil in ASTs shall obtain an Individual Oil Operations Permit from the MDE, per COMAR 26.10.01.09.
15) Owners/Operators of facilities that maintain more than 2,500 gallons of oil in ASTs are required to register each AST with MDE, per COMAR 26.10.01.10.

Bulk Fluid Transfers (Deliveries)

1) All bulk fluid transfer operations shall be performed under the direct supervision of knowledgeable County personnel. At no time shall the delivery vehicle or delivery vehicle operator be unsupervised.
2) The product level within the tank must be measured and available capacity verified before delivery.
3) Deliveries shall be made via fill ports equipped with catch basins to capture drips and spills.
4) Ensure an adequate supply of appropriate spill response equipment is readily available.
5) Post signs in delivery area displaying proper delivery procedures and emergency contact information.

ABOVEGROUND STORAGE TANKS

Used Oil Tanks

1) County personnel must verify the level of product in used oil tanks prior to filling.
2) Used oil tanks should only be filled via designated fill ports. Pumping used oil into the tank via a closed piping system is preferred to manually pouring used oil into the tank.

Brine Tanks

1) If multiple tanks are located onsite, the tanks should be plumbed to ensure that the complete failure of one tank will not drain all the tanks in the system (tanks must be isolated).
2) Minimize seeping and leaking at fittings by properly supporting piping and fittings, using flexible connectors or hoses to reduce stress, and installing corrosion-resistant fittings.
3) Consider placing hoses in non-permeable trenches or using drip-less nozzles to reduce repeated small spills.

RESIDENT DROP-OFF CENTER

GH-08

Not Applicable ☒ Applicable ☐

CONCERN

Resident Drop-Off Centers are publicly accessible facilities where residents can drop off used automotive fluids (i.e. oil or antifreeze), municipal waste, recyclable, and/or organic waste, typically free of charge. Improper transfer or management of the waste materials can allow a number of pollutants including oils and greases, toxic and chemical compounds, nutrients, metals, and other wastes to enter waterways.

POLLUTION PREVENTION MEASURES

General *(applicable to all materials collected)*

1) Clearly identify waste materials accepted by the facility, and clearly mark designated collection areas.
2) Waste material should be inspected by a County representative, prior to disposal.
3) Avoid positioning waste receptacles near storm drains, water bodies, or areas of concentrated runoff.
4) When practical, receiving areas should be covered.
5) Do not allow containers to overflow or waste materials to accumulate on the ground.

Automotive Fluid Collection

1) Used oil, antifreeze, and automotive fluid receiving areas should be on impervious surfaces, covered, and provided with secondary containment, which shall be maintained clean and dry.
2) Provide lidded waste receptacles in the receiving area for the public to dispose of empty containers. Waste receptacles shall be emptied routinely and waste disposed of properly.
3) Collection areas shall be inspected daily and all trash and spilled liquids appropriately cleaned up.
4) The available capacity of waste liquid collection containers shall be routinely verified and waste removals scheduled, as needed.
5) Install appropriate controls to prohibit the overfilling of waste fluid collection containers.
6) Place appropriate spill response equipment in close proximity to drop-off areas.
7) If aboveground tanks are used to collect waste fluids, refer to BMP Fact Sheet GHP-07 (Aboveground Storage Tanks) for additional recommendations.

Organic Debris Collection

1) Routinely transfer collected organic debris/waste to a composting or disposal facility.
2) Do not permit composting of organic waste except at properly designed and permitted facilities.
3) Enact controls to prevent leaves and other windblown debris from entering stormwater inlets.

Municipal Waste / Recyclables Collection

1) Refer to BMP Fact Sheet GHP-01 (Waste Management) for additional recommendations.

BMP Fact Sheet

STOCKPILES

GH-09

Not Applicable ☒ Applicable ☐

CONCERN

The County may stockpile various erodible materials, the type of material can vary depending on the needs of the County. Stockpiled material may include soil, sand, millings, slag, cinders, sawdust, landscaping bark, compost, etc. Exposed stockpiles can easily erode due to wind or precipitation and contribute suspended solids to stormwater runoff.

POLLUTION PREVENTION MEASURES

1) Maintain stockpiles of erodible materials within roofed storage buildings or covered storage bins, if feasible. If not, stockpile material on an impervious surface and cover the stockpile.
2) Temporary stockpiles should be placed on an impermeable membrane (tarp) for quick clean-up.
3) Locate stockpiles away from drain inlets, catch basins, swales, areas of concentrated stormwater flow, water bodies, and environmentally sensitive areas.
4) Divert stormwater flows away from/around the stockpiles using a diversion device (e.g., temporary swale, berm, sandbags, or diversion fence).
5) Cover temporary stockpiles of erodible materials with a tarp that has been adequately secured. The covers must be in place at all times when the stockpile is not in active use.
6) When accessing a portion of the stockpile, only remove a section of the cover to minimize exposure to the elements.
7) Use barriers to isolate stockpiled materials from high-traffic areas to prevent tracking of materials.
8) Sweep (do not wash or hose down) in front of material stockpile storage areas at regular intervals, following loading and unloading activities, and during times of heavy use.
9) If material is observed migrating from the stockpile, clean up all migrated material upon discovery and provide additional controls to reduce migration from the stockpile. If such measures are ineffective implement controls to capture pollutants before they migrate off-site (e.g. silt fencing, inlet filters, filter socks, at-grade inlet protection, etc.).
10) Minimize material stockpile inventory based on historical inventory/usage records and public safety operational needs.
11) Cold mix asphalt shall be stored on and covered with plastic sheeting or comparable material.
12) Routinely inspect outdoor material stockpiles to verify existing controls are functioning properly and for signs of erosion or material transport.

BMP Fact Sheet

DEICING MATERIALS

GH-10

Not Applicable ☒ Applicable ☐

CONCERN

When salt and other de-icing materials are stored outside and uncovered, they have a much higher risk of being eroded and transported offsite by stormwater. Improper de-icing material and sand storage may result in stormwater runoff containing elevated concentrations of sodium chloride and dissolved solids. Sodium chloride (e.g., road salt) is an effective deicer but can be highly corrosive to stormwater facilities. Smaller waterways are at a higher risk to increases in salinity, which can threaten aquatic species. Additionally, runoff containing sodium chloride has the potential to reach drinking water sources where small traces can adversely impact public health.

POLLUTION PREVENTION MEASURES

1) Bagged de-icing chemicals must be stored indoors. If stored outdoors bags must be kept on pallets (off the ground) and covered at all times. Bags must be intact without holes or openings.
2) Bulk de-icing materials shall be stored under cover and on an impervious surface.
3) Bulk salt storage areas/buildings shall not be overfilled so that salt spills out beyond the entrance of the storage area/building.
4) Bulk salt storage areas/buildings shall be maintained in a structurally sound condition and in a way that prevents the release of salt and the infiltration of stormwater. Deicing materials should not touch the sides of metal storage containers.
5) Barriers such as berms, gates, knee walls, tarps, and/or straw bales shall be placed at the entrances of bulk salt storage areas/buildings to prohibit the migration of salt and prevent contact with precipitation/stormwater runoff.
6) Routinely inspect storage areas for migrating materials or deterioration of containment structures. Sweep up all migrating materials upon discovery and repair the source of the migrating pollutant.
7) Loading areas should be constructed of impervious material and covered or enclosed, to the extent practical, to reduce potential contact with stormwater.
8) Minimize the distance de-icing materials are transported during loading/unloading activities.
9) Prevent and/or minimize the spillage of salt and de-icing materials during loading/unloading activities, immediately clean spilled or tracked materials.
10) Sweeping of storage and loading/unloading areas shall be conducted immediately following loading/unloading activities.
11) Do not store de-icing materials (bulk or bagged) over or immediately adjacent to drains or waterways.
12) Control site drainage by diverting stormwater run-on away from storage/loading areas using appropriate measures (e.g., curbing, berms, etc.).
13) Slope storage/loading areas to direct salt-contaminated runoff to an appropriate collection area, and in a manner that prevents the runoff from reaching adjacent soil or surface waters.
14) Excess salt shall be removed from salt handling equipment (trucks, spreaders, etc.) following use/prior to storage. All cleaning shall occur on an impervious surface, which is sloped or curbed to contain any washwater and direct it to a collection area for recycling or proper disposal.

Appendix A

GHP Site Inspection Checklist

GOOD HOUSEKEEPING PLAN (GHP)
SITE INSPECTION CHECKLIST

Facility Name: _____ **Inspection Date:** _____

Inspector Name: _____ **Inspector Signature:** _____

- The intent of this inspection is to ensure that the site is being properly maintained and that there are no visible signs of pollutants entering the stormwater system.
- **A shaded status box designates an item in a non-compliant status. Please provide an explanation for all non-compliant items and subsequently document all corrective actions performed.**
- Retain the completed checklists for five (5) years.

Item	Status			CORRECTIVE ACTIONS/COMMENTS *Items which cannot be corrected immediately must be reported to the GHP/NPDES Program Manager*
	Yes	No	N/A	
GENERAL HOUSEKEEPING				
1. Are exterior areas of the facility free of accumulated trash, debris, and unneeded materials?				
2. Are stormwater drains and inlets free from debris, sediment, and evidence of spills/releases?				
3. Is the facility free from signs of erosion?				
4. Are paved surfaces free of accumulated sediment?				
5. Is spill response equipment available in maintenance areas, fueling areas, hazardous material storage areas, and/or other required areas?				
6. Are spill kits and absorbent materials clearly labeled and accessible (i.e. items are not piled on top of or in front of spill kits)?				
7. Are spill kits secured from being stolen or misused?				
8. Is there a labeled container present for the disposal of used spill cleanup material?				

GOOD HOUSEKEEPING PLAN (GHP)
SITE INSPECTION CHECKLIST

Item	Status			CORRECTIVE ACTIONS/COMMENTS *Items which cannot be corrected immediately must be reported to the GHP/NPDES Program Manager*
	Yes	No	N/A	
9. Does spill response equipment (i.e. spill kits, absorbent materials) need to be replenished?				
WASTE MANAGEMENT				
10. Are areas around solid waste containers/roll-offs/compactors free of excessive trash accumulation or overflowing containers?				
11. Are areas around solid waste containers/roll-offs/compactors free of visible evidence (i.e. leaks, staining) of ongoing stormwater pollution?				
12. Are scrap metal containers in good order and free from evidence of leaking oil/grease?				
13. For dumpsters, roll-offs, and other waste receptacles, where leaks are observed, have appropriate controls (e.g. containment, spill response, etc.) been enacted?				
14. Are the lids (if present) to solid waste containers closed?				
15. Is street sweeping/vactor waste being managed appropriately (i.e. no evidence of material migration)?				
16. Is waste cooking grease managed appropriately (i.e. no evidence of spilled material or excessive staining)?				
VEHICLE & EQUIPMENT STORAGE				
17. Are stored vehicles/equipment free from leaks?				
18. If leaks are present, are they being managed appropriately (drip pan or other methods in place to capture released liquids)?				
19. Are storage areas free of visible evidence of chronic leaks/spills (i.e. significant staining)?				

GOOD HOUSEKEEPING PLAN (GHP)
SITE INSPECTION CHECKLIST

Item	Status			CORRECTIVE ACTIONS/COMMENTS *Items which cannot be corrected immediately must be reported to the GHP/NPDES Program Manager*
	Yes	No	N/A	
VEHICLE & EQUIPMENT REFUELING				
20. Are the areas around refueling areas free from evidence of spills or leaks?				
21. Are refueling areas free of used absorbent material that has not been swept/cleaned up?				
22. Do fuel dispensers and hoses appear to be in good working order and well-maintained?				
VEHICLE MAINTENANCE				
23. Is there any indication that vehicle maintenance activities are being conducted outdoors?				
24. Is there any indication that vehicle maintenance activities are contributing to stormwater pollution?				
VEHICLE & EQUIPMENT WASHING				
25. If performed on-site, does all vehicle/equipment washing occur indoors?				
26. Is wash water collected and disposed of properly?				
27. Is there any indication that vehicle/equipment wash water is being released to stormwater conveyances or pervious areas?				
MATERIAL STORAGE				
28. Are all outdoor storage areas free from visible signs of leaks or spilled material?				
29. Are material storage containers in good condition?				

GOOD HOUSEKEEPING PLAN (GHP)
SITE INSPECTION CHECKLIST

Item	Status			CORRECTIVE ACTIONS/COMMENTS *Items which cannot be corrected immediately must be reported to the GHP/NPDES Program Manager*
	Yes	No	N/A	
30. Are drums, totes, and other containers (that are <u>not</u> empty) stored off the ground and covered, or stored indoors?				
31. Are liquid-containing drums/totes located outdoors provided with secondary containment?				
32. Are containers that are located outdoors equipped with closed lids except when material transfers are occurring?				
33. Are materials, which could impact stormwater, stored away from heavy traffic areas, or protected from vehicle collisions?				
34. Are chemical storage containers properly labeled?				
35. If empty drums are stored outside, are all openings equipped with caps to prevent water intrusion?				
ABOVEGROUND STORAGE TANKS				
36. Are all storage tanks, and surrounding areas free from visible signs of leaks or spilled material?				
37. Do storage tanks appear to be in good working order (e.g. free of obvious signs of damage or malfunctioning equipment)?				
38. Are remote fills associated with tanks free of liquid and debris?				
RESIDENT DROP-OFF CENTERS				
39. Are waste collection areas clearly identified?				
40. Are used oil/antifreeze collection tanks, containment structures, and surrounding areas free from visible signs of leaks or spilled material?				

GOOD HOUSEKEEPING PLAN (GHP)
SITE INSPECTION CHECKLIST

Item	Status			CORRECTIVE ACTIONS/COMMENTS *Items which cannot be corrected immediately must be reported to the GHP/NPDES Program Manager*
	Yes	No	N/A	
41. Do used oil/antifreeze collection tanks appear to be in good working order (e.g. free of obvious signs of damage or malfunctioning equipment)?				
42. Are empty used oil/antifreeze containers being collected and disposed of in the trash?				
43. Are areas around waste/recyclables containers free of excessive trash accumulation or overflowing containers?				
44. Are areas around waste/recyclables containers free of visible evidence (i.e. leaks, staining) of ongoing stormwater pollution?				
45. Are organic debris collection areas free of visible evidence of ongoing stormwater pollution (e.g. leaves and debris in stormwater conveyances)?				
STOCKPILES				
46. Are material piles, including salt, soil, sand, and millings isolated (i.e. covered, bermed, etc.) to prevent stormwater run-on and run-off?				
47. Are areas surrounding material piles (e.g. salt, soil, sand, millings, etc.) free of tracked or migrated material?				
DEICING MATERIALS				
48. Are all deicing materials stored indoors or undercover?				
49. Are salt storage structures in good condition (e.g. no evidence of material escaping or stormwater infiltration)?				
50. Is the salt loading area clean?				

GOOD HOUSEKEEPING PLAN (GHP)
SITE INSPECTION CHECKLIST

Item	Status			CORRECTIVE ACTIONS/COMMENTS *Items which cannot be corrected immediately must be reported to the GHP/NPDES Program Manager*
	Yes	No	N/A	
51. If deicing materials are tarped, is the tarp secure and covering the entire pile?				
52. Are bags of salt stored indoors, or off the ground and covered?				

ADDITIONAL COMMENTS:

Appendix B

GHP Stormwater Conveyance System Inspection Checklist

GOOD HOUSEKEEPING PLAN (GHP)
STORMWATER CONVEYANCE SYSTEM INSPECTION CHECKLIST

Facility Name: _____ **Inspection Date:** _____

Inspector Name: _____ **Inspector Signature:** _____

- The intent of this inspection is to ensure the free flow of stormwater within on-site conveyance systems and prevent damage/flooding.
- **If maintenance is needed, please provide an explanation, and document all corrective actions performed.**
- **Inspections shall include visually accessible infrastructure only; at no time shall inspection personnel enter a confined space.**
- Retain the completed checklists for five (5) years.

Item	Item Checked (Y/N/NA)	Maintenance Needed (Y/N)	CORRECTIVE ACTIONS/COMMENTS *Items which cannot be corrected immediately must be reported to the GHP/NPDES Program Manager*
CATCH BASINS / INLETS			
1. Look for debris and sediment blocking catch basin grates. If found, remove.			
2. Look for damage or cracks to the frame, grate, basin walls or bottom. If found, schedule repairs or replacement.			
3. Look for sediment and debris in the catch basin sump. If sediment fills 60% of the sump or comes within 6” of a pipe it should be scheduled for cleaning.			
4. If any type of filtering device is present, verify that the filter is not clogged, torn, or damaged; clean if clogged, replace if damaged.			
PIPES / CULVERTS			
5. Look for evidence of clogged piping (e.g. visual obstructions, standing water within manholes/inlets structures, etc.). If found, remove or schedule cleaning.			
6. Verify vegetation growth, if present, does not impede water flow. If it does, mow, cut back, or remove.			

GOOD HOUSEKEEPING PLAN (GHP)
STORMWATER CONVEYANCE SYSTEM INSPECTION CHECKLIST

Item	Item Checked (Y/N/NA)	Maintenance Needed (Y/N)	CORRECTIVE ACTIONS/COMMENTS *Items which cannot be corrected immediately must be reported to the GHP/NPDES Program Manager*
7. Inspect for damaged piping, inlets, outlets, headwalls, wingwalls, or excessive erosion. If found, make or schedule repairs.			
DITCHES / TRAPEZOIDAL SWALES			
8. Check for erosion, slumping, or undercutting. If found, make or schedule repairs.			
9. Look for trash and sediment accumulation. Remove all trash and remove sediment if it will impede water flow or clog downstream structures.			
10. Verify vegetation growth does not impede water flow. If it does, mow, cut back, or remove. Remove any trees or shrubs growing within the ditch.			
11. Check the integrity of check dams, filter socks, or other flow dissipation/filtering devices within the ditch or swale. Perform or schedule service if they are clogged, damaged, or deteriorated.			
12. Check inlets and outlets for debris accumulation, damage, or erosion. If found, make or schedule repairs.			

ADDITIONAL COMMENTS:

GUIDANCE DOCUMENT
GOOD HOUSEKEEPING PLAN - STORMWATER CONVEYANCE INSPECTIONS

INTRODUCTION

Maintaining catch basins, stormwater inlets, and other stormwater conveyance structures on a regular basis will remove pollutants, prevent backups, and ensure the system functions as intended to avoid flooding.

Each GHP-covered facility is required to conduct routine stormwater conveyance system inspections to ensure the free flow of stormwater within the conveyance system(s). The GHP includes a *"GHP Stormwater Conveyance System Inspection Checklist"*, to be used when completing the required inspections. This document provides additional background and guidance to aid facility personnel in completing the inspections.

CATCH BASINS / INLETS

Catch basins and inlets are all points for stormwater to enter storm drain systems. These structures are typically part of a larger conveyance system with many interconnected components where the impairment of one component can compromise the functionality of the larger system. Inlets and catch basins are subject to functional impairment by a variety of conditions, including:

- Structural damage including from vehicles and plows
- Cracks/joint separation at piping (inlet and outlet) connections
- Leaking due to cracks and joint separation
- Missing or damaged grates and grate frames
- Corrosion
- Blockage caused by debris, sediment, vegetation, or other objects

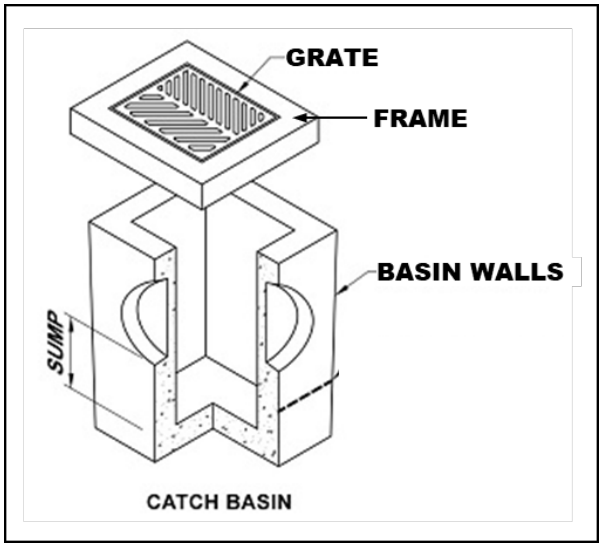

Figure 1 – Catch Basin Diagram

The following photos provide additional information related to the various inspection items, including examples of typical issues that may be encountered. The photo numbers correspond to the inspection checklist item number.

Inspection Item #1 [1]



Debris and sediment blocking inlet/catch basin grate.

Inspection Item #2 [2]



Damaged Grate

Inspection Item #2 [3]



Damaged Frame

Inspection Item #2 [4]



Failing brick walls with a stormwater inlet.

Inspection Item #2 [5]



Failing asphalt surrounding the inlet

[1] Grand Valley State University - https://www.gvsu.edu/groundswell/clogged-storm-drains-71.htm
[2] Georgia Department of Transportation – Stormwater System Inspection and Maintenance Manual, March 2020
[3] https://catchbasinauthority.ca/catch-basin-101/
[4] https://www.fixasphalt.com/catch-basin-repairs
[5] https://ccpia.org/catch-basin-and-manhole-inspections/

Inspection Item #3 [6]



Sediment and debris inside stormwater inlet

Inspection Item #3

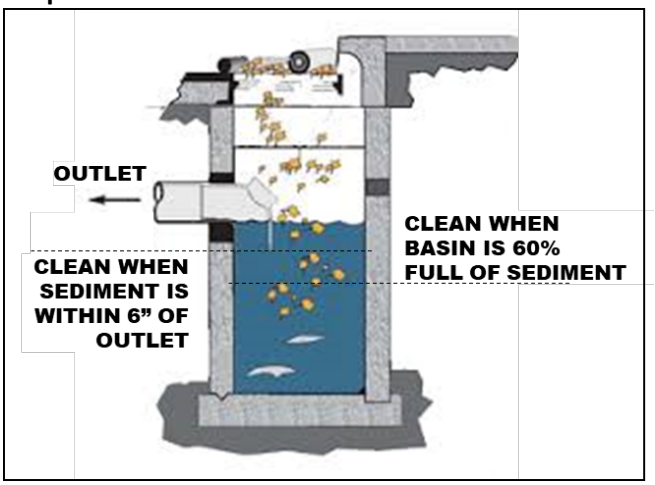

Remove sediment from a catch basin if it fills 60% of the sump or comes within 6" of a pipe.

Inspection Item #4 [7]



Example of inlet filter. Replace when filled or damaged.

Inspection Item #4 [8]



Example of an inlet filter sock, replace if damaged.

PIPES AND CULVERTS

Pipe systems are designed to convey stormwater runoff safely and effectively from inlets to various discharge points and outfalls. A culvert is a structure that channels water under an obstacle such as a roadway or railroad. These structures are subject to functional impairment by a variety of conditions, including:

- Blockage or obstruction due to build up of vegetation, debris, sediment, or other objects
- Cracks and/or joint separation
- Collapsed pipe
- Corrosion
- Root intrusion
- Lack of stabilization

[6] https://www.fixasphalt.com/catch-basin-repairs
[7] https://store.interstateproducts.com/products/Ultra-Drain-Guards/Ultra-Drain-Guard-Adjustable-Frame-Model
[8] https://www.newpig.com/pig-sediment-filter-sock/p/FLT787

Inspection Item #5 [9]



A pipe filled with sediment, inhibiting flow.

Inspection Item #5 [10]



Standing water around an inlet may indicate a blockage.

Inspection Item #6 [11]



Pipe conveyance filled with vegetation.

Inspection Item #7 [12]

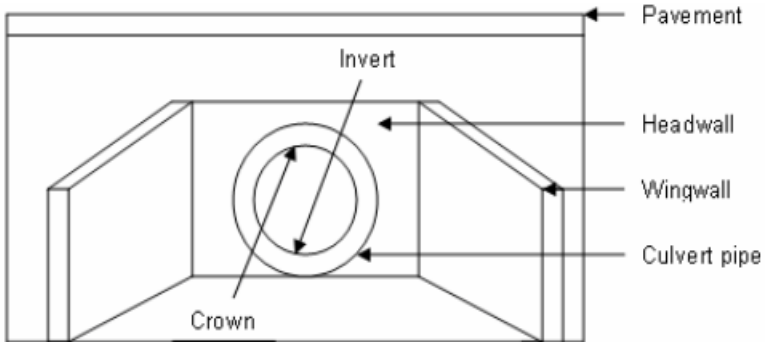

Diagram depicting various components of a culvert.

[9] Georgia Department of Transportation – Stormwater System Inspection and Maintenance Manual, March 2020
[10] https://www3.epa.gov/region9/water/npdes/stormwater-feature.html
[11] Georgia Department of Transportation – Stormwater System Inspection and Maintenance Manual, March 2020
[12] https://www.researchgate.net/figure/Components-of-a-Culvert_fig34_228685906

Inspection Item #7 [13]



A crack is the culvert headwall.

Inspection Item #7 [14]



Evidence of erosion around a culvert.

DITCHES AND SWALES

Ditches and swales serve similar functions. Both are used to convey stormwater. However, there are slight differences. A ditch is a narrow channel typically found along roads and at the edges of parking lots/driveways. A swale is like a ditch, but it is broad and shallow, and usually covered or lined with turfgrass or stone. Issues associated with these structures, which could impede their function include:

- Blockage or obstruction due to vegetation, debris, sediment, or other objects
- Erosion
- Rapidly moving water
- Lack of adequate vegetative cover for grass-lined channels

Inspection Item #8 [15]



Erosion and slumping within a drainage ditch.

Inspection Item #8 [16]



Slumping within a drainage swale.

[13] https://www.sbt-durabi.org/articles/xml/ARN0/
[14] https://lufkindailynews.com/news/local/culverts-crumbling-in-precinct-1/article_a9fed902-4379-5248-ab11-7471e2974298.html
[15] https://graniteseed.com/blog/how-to-stop-a-ditch-from-eroding/
[16] https://www.mnwcd.org/erosion-control

Inspection Item #9 [17]



Litter and debris within a ditch.

Inspection Item #9 [18]



Litter and debris within a swale.

Inspection Item #10 [19]



Cracks and joint separation in concrete channels, removal of vegetation may prevent future damage.

Inspection Item #11 [20]



Rock check dam across a channel.

Inspection Item #11 [21]



Filter sock check dams across a grass swale.

[17] https://craven.ces.ncsu.edu/2023/02/for-those-who-love-to-litter/
[18] https://www.cityoftulsa.org/government/departments/public-works/stormwater-quality/adopt-a-stream/
[19] Georgia Department of Transportation – Stormwater System Inspection and Maintenance Manual, March 2020
[20] EPA Stormwater Best Management Practice, Check Dams, December 2021
[21] EPA Stormwater Best Management Practice, Check Dams, December 2021

Inspection Item #12 [22]



Inlet to a rock-lined swale.

Inspection Item #12 [23]



Sediment accumulation at swale inlet.

END OF DOCUMENT

[22] https://www.stormwater.com/erosion-control/vegetation-management/article/13016118/inlet-protection-during-constructionand-after

[23] https://www.stormwater.com/erosion-control/vegetation-management/article/13016118/inlet-protection-during-constructionand-after

Appendix C

General Spill Response Procedures

SPILL RESPONSE AND NOTIFICATION PROCEDURES

A. Discovery of a Spill

1. Upon discovery of a spill, facility personnel should immediately assess the situation and determine if the spill is considered a "Minor" or "Major" spill. For a spill to be considered "Minor" all the following conditions must be satisfied:

    - ❖ The type of material spilled is known;
    - ❖ The spill is confined to the immediate work area;
    - ❖ The spill has not reached storm drains, sanitary sewer systems, open water, or surrounding soils;
    - ❖ The spill can be safely managed;
    - ❖ The employee can contain and clean up the spill with the PPE that is normally used in the work area;
    - ❖ The spill does not pose a serious threat of fire or an explosion; and
    - ❖ The spill does not pose conditions that are immediately dangerous to life or health.

2. If all the above conditions are met, the spill is considered "Minor". Refer to ***Section B*** of this document for appropriate response actions.

3. If all the above conditions are not met, then the spill is considered "Major". Refer to ***Section C*** of this document for appropriate response actions.

4. If a spill involves flammable liquids, ignitable vapors may be present - precautions must be taken to prevent ignition. Do not turn on or off equipment since sparks may be generated. Additionally, avoid the movement of equipment that could create static electricity. Larger spills of flammable liquids could pose a fire threat and would be considered a "Major" spill. Refer to ***Section C*** for appropriate actions.

B. Response to a "Minor" Spill

1. Identify the source of the spill and the direction in which the spill is heading.

2. Attempt to stop the spill at the source. Where applicable, the source of the spill shall be taken out of service until repairs can be made. If the spill is related to a fuel dispensing system, activate the Emergency Shut-Off (ESO) switch to prevent additional fuel disbursements.

3. If material is released outside a containment area, it is crucial that the material be contained as quickly as possible. Following proper safety procedures, use absorbent materials or diking to contain the spill. Prevent the spill from reaching storm drains, sanitary sewers, or open water. If a spill is flowing toward a drain, install temporary diking around the drain, block off the drain with a drain cover, or place absorbent material around the drain to prevent a discharge.

4. Once the spill has been stopped and contained, estimate the quantity of the spill. Consult applicable Safety Data Sheet (SDS) for material compatibility and environmental precautions. Note and follow recommendations regarding special precautions, spill response equipment, methods, or precautions. All cleanup work shall be conducted in accordance with existing safety protocols and SDS recommendations. Contact the facility Superintendent/Supervisor, or designee, for assistance if needed.

5. Recover or clean up the spilled material as much as possible. Material that cannot be reused must be discarded in accordance with state and federal regulations. Liquids absorbed by porous materials (e.g., wood, gravel, significant quantities of absorbent material, etc.) shall be placed into US DOT-approved 30-gallon or 55-gallon steel drums. Following cleanup, the container shall be secured and appropriately labeled to identify the contents and the date of the spill/cleanup. Containers shall be stored indoors and provided with secondary containment until transported off-site for disposal.

6. For spills that do not involve flammable liquids or other potential hazardous wastes, small quantities of used absorbent materials may be double bagged and disposed of along with municipal trash as long as all liquids have been absorbed (no free liquid may be present).

7. If the spilled material is a flammable liquid, corrosive liquid (pH ≤ 2 or ≥ 12.5), or other potential hazardous waste, all recovered product, impacted material, and used absorbent must be placed into a US DOT-approved containers/drums. Following cleanup, the container(s) shall be secured and appropriately labeled to identify the contents and the date of the spill/cleanup. Containers shall be stored indoors and provided with secondary containment until transported off-site for disposal. The facility Superintendent/ Supervisor, or designee shall be notified that a potential hazardous waste was released and that a waste characterization may be needed to facilitate proper disposal.

8. Surfaces that are contaminated by the spill shall be cleaned utilizing dry absorbent material. Tools and equipment that have been used in the cleanup must be decontaminated immediately after use. Decontamination water (if used) must be minimized, containerized, and disposed of properly.

9. If waste requires disposal, notify the facility Superintendent/Supervisor, or designee who will arrange for the proper characterization and disposal of any waste material. Representative sampling and analysis may be necessary to properly characterize the waste. The waste must be transported and disposed of in compliance with all applicable laws and regulations. Waste manifests, trip tickets, or bills of lading (if required) for waste disposal shall be kept on file.

10. Facility personnel shall restock/replace spill response equipment and absorbent materials used during the clean-up efforts.

11. The facility Superintendent/Supervisor, designee, or other appropriate County personnel shall be notified of the spill in accordance with ***Section D*** of this document.

C. Response to "Major" Spill

A "Major" spill is any discharge that does not meet the definition of a "Minor" spill. Any employee or contractor observing, being involved with, or recognizing a potential or actual spill of oil or other hazardous material, other than a "Minor" spill is responsible for performing the following actions:

1. If there is no danger to human health, attempt to stop and contain the spill at the source. If the spilled material is unknown, if PPE other than that which is typically used in your work area, is necessary to approach the spill area, or if assistance is required to stop the spill, do not attempt to contain the spill. If the spill is related to a fuel dispensing system, activate the Emergency Shut-Off (ESO) switch.

2. Most County employees lack the appropriate training to respond to "Major" spills. If the spill is of an unknown substance, is of a quantity that cannot be safely managed, or poses other risks beyond the training level of the employee, the employee should not attempt to contain or clean up the spill.

3. Evacuate individuals from the area and keep personnel away from the impacted area.

4. Immediately notify the facility Superintendent/Supervisor, or designee of the incident. The notified individual will determine the need for further evacuations and contact emergency response personnel (911), as necessary. *If a situation represents an immediate and grave danger to personnel, the public, structures, or other infrastructure, the individual discovering the incident may call 911 directly without first notifying facility management.*

5. The facility Superintendent/Supervisor or designee will determine if assistance from emergency response contractors is required to clean up the incident and will coordinate such spill response efforts with spill response contractors and other County agencies and first responders.

6. Facility personnel will provide assistance to emergency responders, as appropriate.

D. Reporting a Spill (Internal Notifications)

1. Once a spill is contained and cleanup operations have been initiated, the individual discovering the spill shall notify the appropriate County representatives and provide the following information:

    a) Identify the location, date, and time of the incident;
    b) Identify the type of material spilled or discharged;
    c) Estimate the quantity spilled and the rate of the spill;
    d) Identify the cause of the spill or discharge;
    e) Identify impacted media or infrastructure (soil, storm drains, open water bodies, etc.);
    f) Determine the extent of injuries involved; and
    g) Provide response measures implemented by the facility personnel.

E. Reporting a Spill (Regulatory Notifications)

State of Maryland Reporting Requirements (COMAR 26.10.01.05)

1. Upon discovery of a spill, the Responsible Person shall notify the MDE Emergency Response Division **within two (2) hours** by calling 866-633-4686. The caller shall be prepared to provide the following information:

    a) The time and date of the spill;
    b) The location and cause of the spill;
    c) The mode of transportation or type of facility involved;
    d) Type and quantity of oil spilled;
    e) Details regarding any assistance required;
    f) The name, address, and telephone number of the person making the report; and
    g) Any other pertinent information requested by the Department.

2. MDE will provide further guidance on additional responsibilities.

3. Within **ten (10) working days** of the completed removal and clean-up activities, the Responsible Person shall prepare a report using either County letterhead detailing the incident. The report shall contain the following:

    a) Date, time, and place of the spill;
    b) The amount and type of oil or hazardous substance spilled;
    c) A complete description of circumstances that contributed to the spill;
    d) A complete description of the containment and removal operations performed, including disposal sites to which oil refuse was transported;
    e) Procedures, methods, and precautions instituted to prevent the recurrence of an oil spill from the facility involved;
    f) Any other information considered necessary or required by the MDE for a complete description of the incident; and
    g) A certification that the information provided is true and correct to the knowledge of the person signing the report.

4. The completed report shall be submitted to mdeerd.mema@maryland.gov or faxed to 410-537-3932.

5. A digital copy of the completed report and any accompanying documentation shall be retained

Federal Reporting Requirements - National Response Center (40 CFR 110)

1. If any of the following criteria are met the Responsible Person shall notify the National Response Center (NRC) **within two (2) hours** of the spill discovery by calling 800-424-8802 or 202-426-2675.

    - ❖ The spill has caused a film, sheen, or discoloration of the surface water or shorelines;
    - ❖ The material spilled will violate applicable water quality standards (surface water or groundwater); or
    - ❖ The spill has caused a sludge or emulsion to be deposited beneath the surface of the water or on the shoreline.

2. At a minimum, the following information shall be provided to the NRC:

    a) Name, organization, and telephone number of reporting party;
    b) Name and address of the responsible party;
    c) Date, time, and location of the incident;
    d) Source and cause of the discharge;
    e) Type of material(s) discharged;
    f) Quantity of materials discharged;
    g) Danger or threat posed by discharge;
    h) Number and types of injuries (if any);
    i) Weather conditions at the incident location; and
    j) Other information to help emergency personnel respond to the incident.

3. If unable to report to the NRC, reports can be made to the EPA Regional Office at 800-438-2474 or the U.S. Coast Guard (USCG) at 202-372-1001. The NRC, EPA, or USCG will provide further guidance.

4. A digital record of the NRC notification and any accompanying documentation shall be retained on-site.

Federal Reporting Requirements - EPA Regional Administrator (40 CFR 112.4)

1. If the facility where the spill occurred is regulated under 40 CFR 112 and is required to have a Spill Prevention, Control, and Countermeasures (SPCC) Plan, the Responsible Person shall report the spill to the EPA Region III Administrator when any of the following criteria are met:

   - More than 1,000 gallons of oil is discharged to navigable waters or adjoining shorelines in a single incident; or
   - More than 42 gallons of oil is discharged to navigable waters or adjoining shorelines in each of two incidents occurring within any twelve-month period.

2. The report shall be made in writing **within 60 days** of the spill and shall contain:

   a) Name and location of the facility;
   b) Owner/operator name;
   c) Maximum storage/handling capacity of the facility and normal daily throughput;
   d) Corrective actions and countermeasures taken;
   e) Adequate description of the facility including maps, and flow diagrams;
   f) Cause of the discharge to navigable waters, including a failure analysis;
   g) Additional preventative measures taken or planned to minimize discharge reoccurrence; and
   h) Other information required by the EPA Regional III Administrator.

3. The report shall be submitted to the EPA Regional Administrator at the following address:

   EPA Regional Administrator
   US EPA Region 3
   1650 Arch Street (3RA00)
   Philadelphia, PA 19103-2029

4. A copy of the report shall be retained in the facility SPCC Plan.

Appendix D

Training Records

GOOD HOUSEKEEPING PLAN (GHP)
TRAINING ATTENDANCE LOG

FACILITY NAME: _____

DATE	NAME *(PRINT)*	SIGNATURE

By signing I affirm that I have completed the required annual training; and I am aware of and understand my responsibilities under this Plan.

GOOD HOUSEKEEPING PLAN (GHP)

Hickory Annex – HCPS Facilities
2209 Conowingo Road
Bel Air, MD 21015

June 30, 2025

TABLE OF CONTENTS

1.0 BACKGROUND & INTRODUCTION 1
1.1 Objectives 1
1.2 Potential Stormwater Pollutants 1
2.0 RESPONSIBILITIES 3
2.1 GHP Implementation 3
2.2 Plan Review and Modification 3
2.3 Inspections 3
2.3.1 GHP Site Inspections 3
2.3.2 Conveyance System Inspections 4
2.4 Training 4
3.0 BEST MANAGEMENT PRACTICES (BMPs) 5
3.1 Applicability of BMP Fact Sheets 5
3.2 BMP Fact Sheets 5

List of Tables

TABLE 1-1 POTENTIAL STORMWATER POLLUTANTS AND THEIR SOURCES 2

List of BMP Fact Sheets

GH-01 - Waste Management
GH-02 - Vehicle and Equipment Storage
GH-03 - Vehicle/Equipment Refueling
GH-04 - Vehicle Maintenance
GH-05 - Vehicle/Equipment Washing
GH-06 - Material Storage
GH-07 - Aboveground Storage Tanks
GH-08 - Resident Drop-Off Centers
GH-09 - Stockpiles
GH-10 - Deicing Materials

Appendices

Appendix A: GHP Site Inspection Checklist
Appendix B: GHP Stormwater Conveyance Inspection Checklist
Appendix C: General Spill Response Procedures
Appendix D: Training Records

List of Acronyms

AST	-	Aboveground Storage Tank
BMP	-	Best Management Practice
CFR	-	Code of Federal Regulations
GHP	-	Good Housekeeping Plan
MDE	-	Maryland Department of the Environment
MS4	-	Municipal Separate Storm Sewer System
NPDES	-	National Pollutant Discharge Elimination System
SPCC	-	Spill Prevention, Control, and Countermeasure Plan

1.0 BACKGROUND & INTRODUCTION

Polluted stormwater runoff has the potential to enter the County's storm sewer systems (referred to as a municipal separate storm sewer system or MS4), and then discharge, untreated, into local water bodies. To address this potential stormwater pollution, the County is required to obtain a NPDES permit from the Maryland Department of the Environment (MDE). The NPDES Permit requires the County to take actions to prevent stormwater pollution, maintain storm sewer systems, monitor stormwater discharges, and develop and implement comprehensive management programs to minimize the discharge of pollutants from the storm sewer system.

To comply with Part IV.D.4.b of the County's Phase I MS4 Permit, the County must develop, implement, and maintain a Good Housekeeping Plan (GHP) for certain County-owned properties not required to be covered under Maryland's General Permit for Discharges from Stormwater Associated with Industrial Activities *(General Permit 12-SWA / 20-SW).*

To support this effort, a *"Good Housekeeping Plan Applicability Certification"* has been developed to evaluate and document if a specific County-owned facility is subject to the GHP requirements. The *"GHP Applicability Certification"* includes the following ten (10) potential stormwater polluting activities. If any of the covered activities are performed at the facility, then that facility is required to implement a site-specific GHP. The GHP will include each of the potential stormwater polluting activities identified in the *"GHP Applicability Certification"* and corresponding pollution prevention procedures.

- Waste Management
- Vehicle and Equipment Storage
- Vehicle/Equipment Refueling
- Vehicle Maintenance
- Vehicle/Equipment Washing
- Material Storage
- Aboveground Storage Tanks
- Resident Drop-Off Center
- Stockpiles
- Deicing Materials

1.1 Objectives

The GHP was developed to outline suitable practices, procedures, and protocols, or Best Management Practices ("BMPs") for reducing and/or preventing stormwater pollution associated with operations at covered County-owned properties. The intent of the pollution prevention procedures included in the GHP is to limit the release of materials with the potential to impact stormwater, this includes reducing or eliminating (to the extent practical):

- The occurrence of spills and leaks;
- The accidental dumping or release of materials;
- The accumulation of waste, trash, debris, unused parts/equipment, etc.;
- The exposure of hazardous materials to precipitation/run-off;
- Stormwater run-off contamination by improperly stored materials; and/or
- Illicit discharges to the storm drain system.

1.2 Potential Stormwater Pollutants

Table 1-1 on the following page provides a list of common potential pollutants that may result from the GHP-regulated activities identified above. Understanding the sources of these pollutants can help in achieving the goals and objectives of the GHP program.

TABLE 1-1 POTENTIAL STORMWATER POLLUTANTS AND THEIR SOURCES

		Waste Management	Vehicle/Equipment Storage	Vehicle/Equipment Refueling	Vehicle Maintenance	Vehicle/Equipment Washing	Material Storage	Aboveground Storage Tanks	Resident Drop-Off Center	Stockpiles	Deicing Materials
Pollutants	**Sources**	**Associated GHP Activity**									
Sediment	Land disturbance; erosion; paved surfaces; material stockpiles; waste storage; salt/abrasive application	X				X	X		X	X	X
Hydrocarbons *(petroleum compounds)*	Leaking vehicle and equipment; vehicle and equipment cleaning; spills; improper storage; maintenance activities; scrap metal disposal; improper disposal	X	X	X	X	X	X	X	X		
Metals	Vehicle brake and tire wear; vehicle/equipment exhaust; batteries; galvanized metal; paint and wood preservatives; fuels, pesticides, and cleaners; vehicle fueling, maintenance, and washing; industrial waste	X	X	X	X	X	X	X	X		
Toxic Chemicals	Pesticide application; improper chemical storage; leaks and spills from storage containers; leaking vehicles; maintenance activities	X	X		X	X	X	X	X		
Chlorides	De-Icing chemicals										X
Trash/Debris	Improper waste storage and disposal; leaking trash containers; littering; poor housekeeping	X	X				X		X		
Nutrients (nitrogen and Phosphorus)	Fertilizers; malfunctioning septic systems; sewer overflows; animal/pet waste; vehicle washing; decaying grass and leaves; leaking trash containers; atmospheric deposition	X				X	X		X		

2.0 RESPONSIBILITIES

2.1 GHP Implementation

A separate GHP is required for each covered facility. The following individual *(identified by name and/or title)* is accountable for the administration and implementation of the GHP at this facility and has the authority to commit the necessary resources to implement this Plan.

_____

Name and/or Title of Responsible Person

The Responsible Person listed above shall ensure that facility personnel involved in any GHP-covered activities identified in this Plan, are provided with access to, and are familiar with, the contents of this Plan.

2.2 Plan Review and Modification

The *"GHP Applicability Certification"* completed for this facility must be reviewed and updated once every permit term, or within one (1) year of substantial changes to a facility's operations that could reasonably contribute to stormwater pollution. Any newly constructed/acquired facility must be assessed within one (1) year of initiating operations at the facility. The facility's GHP must be amended and reissued to the facility within one (1) year of any changes to the facility's *"GHP Applicability Certification"*.

When warranted, the BMP Fact Sheets provided in Section 3.0 may need to be updated or revised. At the same time, additional BMP Facts Sheets may be added. The need for such updates or modifications will be at the discretion of the County's GHP Program Administrator.

2.3 Inspections

The County's MS4 permit requires each facility covered by a GHP to have the following:

1. Written procedures for annually assessing County properties to prevent the discharge of pollutants, spills, and leaks into the County's storm sewer system; and

2. Written procedure for performing stormwater conveyance system inspections and for removing debris that may cause clogging, backups, and flooding.

To meet these requirements, each facility that is covered by a GHP will be required to complete routine site inspections and stormwater conveyance system inspections as detailed below. Facility management will be responsible for ensuring the necessary inspections are completed within the required timeframes, that corrective actions (if needed) are performed, and that records of inspections and completed corrective actions are maintained for at least five (5) years.

2.3.1 GHP Site Inspections

The GHP Site Inspection will be performed to ensure that each GHP-covered facility is being properly maintained and that there are no visible signs of pollutants entering the stormwater system. GHP facilities shall utilize the *"GHP Site Inspection Checklist"*, provided in ***Appendix A*** to complete the required inspection. At a minimum, each facility is to be inspected every five (5) years.

2.3.2 Conveyance System Inspections

Stormwater conveyance systems are generally comprised of curbs and gutters, catch basins, inlet structures, swales, channels, piping, culverts, detention ponds, outfalls, or other structures that are used to collect, contain, and convey stormwater runoff.

The unimpeded movement of stormwater through conveyance systems is critical in avoiding backups and flooding, which can impede facility operations and damage property. Routine inspections and preventative care of stormwater conveyance systems can ensure these systems function as intended and prevent the need for costly and time-consuming repairs and retrofits.

Each GHP-covered facility is required to conduct routine stormwater conveyance system inspections to ensure the free flow of stormwater within the conveyance systems. GHP-covered facilities shall utilize the *"GHP Stormwater Conveyance System Inspection Checklist"*, provided in ***Appendix B*** to complete the required inspections. At a minimum, facility conveyance system inspections are to be conducted every five (5) years.

2.4 Training

As part of the GHP requirements within the County's Phase I NPDES permit, annual training must be provided to all appropriate staff and contractors. Such training shall be provided to any individuals responsible for implementing the GHP, performing the required inspections, or involved in any of the GHP-covered activities identified in this Plan. The required training shall focus on the duties and responsibilities assigned to site personnel in implementing the GHP and the best management practices (BMPs) prescribed in this Plan for preventing, reducing, and eliminating the discharge of pollutants during facility activities.

The County's MS4/GHP Program Coordinator will be responsible for developing the required training and disseminating it to GHP-covered facilities. Each GHP-covered facility will be responsible for identifying staff/contractors who must attend annual training, ensuring identified staff complete the required training, and maintaining records that document training dates and attendees. Training records and other documentation shall be maintained in ***Appendix D*** of this Plan.

3.0 BEST MANAGEMENT PRACTICES (BMPs)

This section contains a BMP Fact Sheet for each of the ten (10) GHP-regulated activities. The County's operations are not limited to the BMPs contained within this document; nor is the County required to implement all of the pollution prevention measures identified within each BMP Fact Sheet. The County should select and implement those measures that are applicable and have the greatest potential for reducing stormwater pollution.

The BMP Fact Sheets contained within this document offer recommended protocols for a particular activity. These pollution prevention measures are considered non-structural BMPs with a focus on source control of potential pollutants.

3.1 Applicability of BMP Fact Sheets

The *"GHP Applicability Certification"* completed for this facility has identified the activities conducted at this facility that require coverage under this Plan. Each of the BMP Fact Sheets shall be marked as to whether they are applicable or not applicable to this facility. The Applicable/Not Applicable indicator on each BMP Fact Sheet can be revised in response to changes in operations at the facility.

3.2 BMP Fact Sheets

BMP Fact Sheets can be found on the following pages. For the sake of consistency, the general outline of a BMP Fact Sheet will be as follows:

- Identification of GHP-covered activity.
- Applicability of the BMP Fact Sheet to the facility.
- A general description of the concern the activity poses to stormwater.
- Recommended pollution prevention measures for reducing/eliminating stormwater pollution.
- Additional sources of information, if applicable.

BMP Fact Sheet

WASTE MANAGEMENT GH-01

Not Applicable ☐ Applicable ☒

CONCERN

Improperly managed waste can allow trash and debris to be washed into storm drains which poses a concern to water quality, marine life, and public health. It also has the potential to create obstructions in the drainage system, which can lead to backups and flooding. Additionally, improper storage and handling of waste materials can allow pollutants including oils and greases, toxic and chemical compounds (including nutrients), bacteria, metals, and other potentially hazardous wastes to enter waterways.

POLLUTION PREVENTION MEASURES

General *(applicable to all waste management activities)*

1) Provide suitable containers, preferably with working covers, to collect waste materials.
2) Ensure that appropriate waste containers are available in areas where waste is generated.
3) Provide a cover over waste storage areas, if feasible.
4) Avoid positioning waste receptacles near storm drains, water bodies, or areas of concentrated runoff.
5) Ensure that lids to waste containers *(if present)* are kept closed to prevent the intrusion of precipitation and prevent trash from blowing out of the receptacle.
6) For waste receptacles, which do not have lids and could leak, containers should be inspected regularly and controls (e.g., containment, spill response, etc.) shall be enacted whenever leaks or dry-weather discharges are observed.
7) Routinely inspect waste containers, roll-offs, compactors, and other waste receptacles for the presence of excessive waste accumulation and overflowing containers.
8) Ensure that wastes accumulating on the ground are placed in a suitable waste container.
9) Ensure that wastes are removed from the facility regularly by a licensed and contracted vendor.
10) Repair or replace damaged waste container lids.

Trash Compactors

1) Routinely inspect trash compactors for malfunctioning equipment or leaking hydraulic oil and provide the appropriate spill response if leaking equipment is encountered.
2) Regularly inspect compactors for leaking fluids and implement appropriate controls such as spill response/cleanup, collection or diversion of released fluids, providing secondary containment, etc. whenever leaks or dry-weather discharges are observed.

Scrap Metal Collection Containers

1) Avoid placing oily or grease-covered items in uncovered scrap metal recycling collection containers. If needed, wrap oily/greasy items in plastic garbage bags before placing them in the collection container.

Hazardous/Universal Wastes

1) Ensure that hazardous waste and universal wastes (e.g., batteries, bulbs, etc.) are collected and stored indoors or within covered collection containers.
2) Verify that hazardous/universal waste collection containers are in good condition, not leaking, and compatible with the wastes being stored.

Street Sweeping / Vactor Truck Material Storage

1) Do not site storage areas near storm drains, open water bodies, or areas of concentrated runoff.
2) Install sediment control devices (e.g. silt fence, silt socks, hay bales, etc.) around the staging area. Inspect these controls regularly and replace them as needed.
3) Cover the materials staging area, if feasible.
4) Provide oil-absorbent booms if necessary to control oily discharge. Inspect and replace booms regularly.
5) The staging area should be checked periodically for evidence of sediment migrating outside of the staging area. Material that has migrated out of the staging area should be promptly swept and returned to the staging area or disposed of.

Waste Cooking Oil/Grease

1) Maintain storage containers indoors or within a covered location, if feasible.
2) Storage containers shall be secured to prevent infiltration of precipitation and accidental/intentional spills or releases.
3) Carefully transfer waste oil/grease to the appropriate collection container to avoid spills.
4) Maintain suitable spill response equipment near collection containers. Immediately clean up any spilled oil/grease. Keep the exterior of the collection container clean and free of spilled oil/grease.
5) Provide secondary containment for collection containers, if feasible.

BMP Fact Sheet

VEHICLE AND EQUIPMENT STORAGE

GH-02

Not Applicable ☐ Applicable ☒

CONCERN

Vehicles and equipment may be stored onsite to support various County operations (e.g., construction, maintenance, snow removal, roadside assistance, mass transit, mowing, etc.). Examples of County owned and operated vehicles and equipment stored onsite at any given time include but are not limited to, the following: cars, trucks, buses, emergency response vehicles, garbage trucks, heavy equipment (backhoes, frontend loaders, etc.), forklifts, towable generators, portable light stands, and roadside equipment. Vehicle and equipment storage is considered a pollutant source due to the potential for incidental releases of petroleum products, lubricants, and various automotive fluids.

POLLUTION PREVENTION MEASURES

1) When possible/practical, store vehicles and equipment inside or under cover to prevent exposure to precipitation.
2) If vehicles or equipment must be stored outside, store vehicles/equipment in designated areas away from areas of concentrated runoff, storm drains, and other stormwater conveyances.
3) Vehicles and equipment shall be staged on impervious (asphalt or concrete) surfaces;
4) Keep truck beds clean and ensure potential stormwater pollutants are stored in closed containers, covered, or otherwise protected from stormwater exposure.
5) Conduct routine visual inspections of vehicles and equipment for the presence of leaks and respond accordingly.
6) Leaking vehicles/equipment should be moved inside or under cover. At a minimum, drip pans or absorbent pads shall be used to contain the leak until the vehicle/equipment can be relocated and the leak addressed.
7) Drain all fluids from wrecked or heavily damaged vehicles and equipment before storage.
8) Have an adequate supply of appropriate spill response equipment readily available and clean up all spills and leaks immediately utilizing dry cleaning techniques (e.g. absorbents and brooms).
9) Train staff in spill response so that incidents are addressed in a timely fashion.
10) Do not wash down areas where leaks have collected on ground surfaces; use dry cleaning methods such as granular absorbents and brooms.

VEHICLE AND EQUIPMENT REFUELING

Not Applicable ☒ Applicable ☐

CONCERN

Refueling activities associated with County vehicles and equipment can result in a discharge of fuel (gasoline and diesel fuel), which has the potential to enter the storm drain system and/or a nearby waterway. Such releases can introduce hydrocarbons, metals, and other toxic chemicals to stormwater runoff.

POLLUTION PREVENTION MEASURES

General Procedures *(applicable to all refueling activities)*

1) Routinely *(at least daily)* inspect the fuel dispensing area for any spills or leaks.
2) Routinely inspect fuel dispensing equipment looking for leaking or damaged equipment. Damaged or malfunctioning equipment shall be taken out of service until it has been repaired.
3) Fuels will only be dispensed into authorized vehicles, equipment, and approved containers.
4) Vehicle operators must remain outside of their vehicles and in attendance of fuel dispensers at all times while dispensing fuel.
5) Third-party contractors must be trained in proper refueling procedures and pollution prevention.
6) Do not utilize a foreign object to keep the dispenser nozzle in the open position. If present, a "hold-open" latch on the nozzle may be used.
7) Do not "top off" a vehicle's fuel tank once the dispenser nozzle's automatic shut-off has been activated. Topping off tanks may result in spills. Post signs in fueling areas warning vehicle operators against "topping off" of vehicle fuel tanks.
8) After refueling has stopped, allow several seconds to pass before removing the nozzle and returning it to the dispenser. This will prevent incidental dripping from the nozzle.
9) Employees refueling vehicles shall note the location of the "Emergency Fuel Shut Off" switch, to be used to stop the flow of fuel to the dispensers in the event of a release or emergency.
10) Have an adequate supply of appropriate spill response equipment readily available and clean up all spills immediately utilizing dry cleaning techniques (e.g. absorbents and brooms).
11) Immediately clean up and dispose of used absorbent material.
12) Do not wash down fueling areas; use dry cleaning methods such as granular absorbents and brooms.
13) Conduct refueling activities over impervious (e.g. concrete) surfaces. Place drip pans or absorbent pads under the nozzle if fueling occurs over a permeable surface such as grass or soil.
14) Install oil control devices in storm drains that may receive contaminated runoff from fueling areas.
15) Cover fueling areas with a canopy or roof to prevent direct contact with rainfall. Direct run-on away from fueling areas and collect fueling area run-off in a dead-end sump or oil-water separator.

Mobile Equipment Refueling

1) Refuel equipment on an impervious surface, downgradient of, and at the farthest practical distance from any storm drain, stormwater conveyance, stormwater management feature, or waterway.
2) Utilize secondary containment when refueling equipment (when practical).
3) Ensure mobile refuelers are parked in designated locations and away from areas of concentrated run-off, storm drains, and other stormwater conveyances.
4) Ensure that procedures are in place and that staff is properly trained in spill response/cleanup so that leaks and spills are addressed appropriately and promptly.

BMP Fact Sheet

VEHICLE MAINTENANCE

GH-04

Not Applicable ☒ Applicable ☐

CONCERN

Vehicle and equipment maintenance can impact the water quality of nearby waterways by exposing stormwater to various pollutants including petroleum hydrocarbons, solvents, antifreeze/coolants, used oil, lubricating oil, grease, brake fluid, metals, and various chemicals. Additionally, vehicles that are wrecked or awaiting repair can be a source of pollution if leaking fluids are not properly controlled.

POLLUTION PREVENTION MEASURES

1) Conduct vehicle and equipment maintenance activities indoors.
2) Make sure incoming vehicles and equipment are inspected for leaking fluids and oil.
3) Move leaking vehicles or equipment indoors or under cover as soon as possible. At a minimum, a drip pan or absorbent pads shall be utilized to contain the leak until the vehicle/equipment can be relocated and the leak addressed.
4) Avoid performing maintenance on vehicles in close proximity to exterior doorways, which may allow released fluids to migrate outdoors.
5) Have an adequate supply of appropriate spill response equipment readily available and clean up all spills and leaks immediately utilizing dry cleaning techniques (e.g. absorbents and brooms).
6) Keep maintenance areas neat and well organized. Remove dirt, debris, and used absorbent regularly.
7) Inspect maintenance areas as well as maintenance equipment on a routine basis.
8) Store vehicles, parts, and generated wastes indoors or off the ground and under cover whenever possible. When practical, provide secondary containment.
9) Promptly transfer used fluids to the proper waste container; do not leave full drip pans or other open containers around the shop. Empty and clean drip pans and containers regularly.
10) Waste liquids shall not be poured into floor drains, sinks, outdoor storm drain inlets, or other storm drains or sewer connections. Liquid wastes are to be collected in properly labeled containers and disposed of by a licensed waste hauler or other appropriate method.
11) Store leaking batteries in a sealed container and provide secondary containment, if feasible.
12) Clean all parts indoors utilizing a self-contained parts washer.
13) Do not hose down indoor service areas to storm drains or areas where it can seep into groundwater.
14) Maintain floor drains in good working order and inspect for proper function on a routine basis. Consider plugging floor drains that discharge to the storm sewer.
15) Ensure oil/water separators (if present) are maintained in proper working order and are checked on a routine basis for the presence of oil.
16) If maintenance work must be performed outdoors, adhere to the following requirements:
    - Conduct maintenance activities over an impervious surface, away from stormwater inlets.
    - Cover outdoor maintenance areas and direct stormwater run-on away from the area.
    - Use drip pans or drop cloths underneath the equipment to catch leaks and drips.
    - Have an adequate supply of appropriate spill response equipment readily available.
    - Clean all spills immediately using dry cleaning techniques (e.g. absorbents and brooms).
    - Avoid performing maintenance activities during precipitation events.
    - Limit temporary outdoor maintenance activities to a single shift/day if additional time is needed to cover the work area at the end of each day/shift.

VEHICLE AND EQUIPMENT WASHING

Not Applicable ☒ Applicable ☐

CONCERN

Vehicle and equipment washing can generate washwater that contains oil, grease, organic compounds, surfactants, phosphates, metals, and suspended solids. If vehicles/equipment are washed outdoors on impervious surfaces, dirty washwater can contaminate stormwater that ends up in waterways. Washing equipment over pervious surfaces can allow washwater to seep into the ground contaminating groundwater.

POLLUTION PREVENTION MEASURES

1) Vehicle and equipment washing should only be conducted in designated indoor wash bays that capture and recycle washwater to the extent practical.
2) Wastewater from the washing facility should be discharged to the sanitary sewer system under the authorization of a wastewater discharge permit issued by the local municipal authority.
3) The floor of indoor vehicle wash bays should be completely bermed or sloped to collect wash water and prevent migration outdoors.
4) No other activities (e.g., fluid changes, repairs, material storage) shall be performed in wash areas.
5) Keep the wash bay neat and well organized. Sweep or pick up all trash and debris daily or as needed.
6) Solid materials accumulated on vehicles or in vehicle beds (e.g. salt, soil, grass, etc.) shall be knocked off or otherwise removed from the vehicle (while inside the wash bay) prior to washing. Solid materials shall be collected and disposed of properly.
7) For vehicles too large to completely fit in the wash bays, only the portion of the vehicle physically located in the confines of the wash bay shall be cleaned. The vehicle shall then be rotated to allow for the remaining portion of the vehicle to be washed.
8) Use nozzles that automatically turn off water when not in use and consider high-pressure, low-volume sprays.
9) Avoid detergents as much as possible. If detergents are necessary, use a biodegradable, phosphate-free detergent.
10) If discharging to an oil-water separator, use a non-emulsifying detergent.
11) Inspect floor drain systems, holding tanks, and conveyances associated with designated wash areas regularly. Maintain oil/water separators and/or process flowthrough separators on a routine basis.
12) Use commercial car washes when vehicle or equipment washing cannot be performed onsite without causing impacts to stormwater.
13) If washing must occur onsite and outdoors, use a designated impervious area that is marked with posted signs indicating proper washing procedures. This area must be bermed to contain the wash water and graded to direct the wash water to the sanitary sewer, an oil-water separator, a holding tank, a dead-end sump, or other containment area. Captured water shall be disposed of properly.
14) Avoid steam cleaning and engine/undercarriage washing which can produce high pollutant concentrations. If steam cleaning or engine washing is necessary, perform such cleanings within isolated indoor areas, and ensure wash water is treated and discharged to the sanitary sewer (if permitted to do so) or captured for off-site disposal.
15) Train staff in proper washing techniques and how to confine washing to designated wash areas.
16) Consider alternatives to washing such as using air to blow grass and debris from small equipment, wet-wiping equipment with rags, etc.

BMP Fact Sheet

MATERIAL STORAGE

GH-06

Not Applicable ☒ Applicable ☐

CONCERN

The storage of petroleum products, chemicals, paints, cleaners, pesticides, fertilizers, bags of erodible materials like sand, cement, and soil, and other potential pollutants can negatively impact surface waters through the accidental releases or leaching of materials into stormwater. Unprotected outdoor storage areas can generate a wide range of stormwater pollutants, such as sediment, nutrients, toxic materials, and petroleum products.

POLLUTION PREVENTION MEASURES

1) Whenever possible, store containers (e.g. drums, bins, bags, cans, and totes) indoors or under cover to limit exposure to stormwater.
2) Designate specific areas for material delivery and storage that are away from heavy traffic areas, storm drains, stormwater conveyances, and areas of concentrated run-off.
3) Designated outdoor storage areas should be paved or consist of an impervious surface.
4) Provide secondary containment for materials whenever possible or required per regulation.
5) Store materials on pallets to prevent stormwater run-on from coming into contact with materials, prevent container corrosion, and allow for better leak detection. Pallets must be in good condition and promptly replaced once damaged or deteriorated.
6) Stack containers according to the manufacturer's recommendations to avoid damage.
7) Immediately replace damaged, corroded, or leaking containers.
8) Ensure all storage containers are clearly labeled with their contents.
9) Keep containers tightly sealed after use.
10) Maintain an accurate inventory of hazardous substances and limit on-site storage to that which is necessary to support facility operations.
11) Keep storage areas neat and well organized; remove debris and unneeded material promptly.
12) If empty drums are stored outdoors, ensure that all openings are equipped with caps to prevent water intrusion and that the drum/storage area is labeled "Empty Drums".
13) Have an adequate supply of appropriate spill response equipment readily available and clean up all spills and releases immediately utilizing dry cleaning techniques (e.g. sweeping/absorbents).
14) Clean up all migrating dry materials upon discovery and address the source of the release.
15) Provide perimeter controls (e.g., berms, rock check dams, etc.) for erodible stockpiles of materials such as mulch, sand, and gravel to prevent migration into the stormwater system.
16) Routinely inspect material storage areas for leaks, material migration, and damaged or corroded containers. Ensure that secondary containment and other perimeter controls are in satisfactory condition.
17) Additional visual inspections of outdoor storage areas should be conducted after significant rainfall events (i.e., greater than 0.5 inches).

BMP Fact Sheet

ABOVEGROUND STORAGE TANKS

GH-07

Not Applicable ☐ Applicable ☒

CONCERN

Aboveground storage tanks (ASTs) may be used to store fuels, automotive fluids, chemicals, or deicing fluids. Leaks from tanks, piping, or other equipment and releases during fluid transfers can all impact stormwater quality. It is critical to maintain ASTs in good working condition to prevent spills and/or releases from occurring. Improperly managed storage tanks can cause significant environmental impacts.

POLLUTION PREVENTION MEASURES

General *(applicable to all storage tanks)*

1) ASTs should be installed and maintained in accordance with COMAR 26.10 and applicable fire codes.
2) ASTs should be provided with secondary containment, whenever feasible or required by regulation.
3) Secondary containment areas shall be maintained clean and dry; drain valves must be kept closed; accumulated liquid shall only be discharged if there are no visible signs of impacts, and in accordance with applicable regulations.
4) Inspect ASTs monthly to identify any leaking or malfunctioning equipment and ensure tanks are functioning as designed.
5) ASTs shall be equipped with a form of liquid-level detection (i.e. sight gauge, electronic monitoring).
6) ASTs shall be equipped with overfill prevention (i.e. overfill alarm and/or overfill prevention valve).
7) Tanks and piping should be protected from vehicle impact via barriers, bollards, guard rails, etc.
8) Install ASTs on solid foundations over impervious surfaces, and away from areas of concentrated run-off, storm drains, and other stormwater conveyances.
9) Properly label all storage tanks (e.g., contents, capacity, etc.).
10) Keep remote fills and fill port spill buckets clean and dry.
11) Keep fill ports, gates, and tank areas secured when not in use to prevent fuel theft and tampering.
12) Have an adequate supply of appropriate spill response equipment readily available and clean up all spills and leaks immediately utilizing dry cleaning techniques (e.g. absorbents and brooms).
13) Facilities that maintain 1,320 gallons or more of aboveground oil products shall prepare and implement a Spill Prevention, Control, and Countermeasure (SPCC) Plan, per 40 CFR 112.
14) Facilities that maintain 1,000 gallons or more of used oil or 10,000 gallons or more of virgin oil in ASTs shall obtain an Individual Oil Operations Permit from the MDE, per COMAR 26.10.01.09.
15) Owners/Operators of facilities that maintain more than 2,500 gallons of oil in ASTs are required to register each AST with MDE, per COMAR 26.10.01.10.

Bulk Fluid Transfers (Deliveries)

1) All bulk fluid transfer operations shall be performed under the direct supervision of knowledgeable County personnel. At no time shall the delivery vehicle or delivery vehicle operator be unsupervised.
2) The product level within the tank must be measured and available capacity verified before delivery.
3) Deliveries shall be made via fill ports equipped with catch basins to capture drips and spills.
4) Ensure an adequate supply of appropriate spill response equipment is readily available.
5) Post signs in delivery area displaying proper delivery procedures and emergency contact information.

ABOVEGROUND STORAGE TANKS

Used Oil Tanks

1) County personnel must verify the level of product in used oil tanks prior to filling.
2) Used oil tanks should only be filled via designated fill ports. Pumping used oil into the tank via a closed piping system is preferred to manually pouring used oil into the tank.

Brine Tanks

1) If multiple tanks are located onsite, the tanks should be plumbed to ensure that the complete failure of one tank will not drain all the tanks in the system (tanks must be isolated).
2) Minimize seeping and leaking at fittings by properly supporting piping and fittings, using flexible connectors or hoses to reduce stress, and installing corrosion-resistant fittings.
3) Consider placing hoses in non-permeable trenches or using drip-less nozzles to reduce repeated small spills.

RESIDENT DROP-OFF CENTER

GH-08

Not Applicable ☒ Applicable ☐

CONCERN

Resident Drop-Off Centers are publicly accessible facilities where residents can drop off used automotive fluids (i.e. oil or antifreeze), municipal waste, recyclable, and/or organic waste, typically free of charge. Improper transfer or management of the waste materials can allow a number of pollutants including oils and greases, toxic and chemical compounds, nutrients, metals, and other wastes to enter waterways.

POLLUTION PREVENTION MEASURES

General *(applicable to all materials collected)*

1) Clearly identify waste materials accepted by the facility, and clearly mark designated collection areas.
2) Waste material should be inspected by a County representative, prior to disposal.
3) Avoid positioning waste receptacles near storm drains, water bodies, or areas of concentrated runoff.
4) When practical, receiving areas should be covered.
5) Do not allow containers to overflow or waste materials to accumulate on the ground.

Automotive Fluid Collection

1) Used oil, antifreeze, and automotive fluid receiving areas should be on impervious surfaces, covered, and provided with secondary containment, which shall be maintained clean and dry.
2) Provide lidded waste receptacles in the receiving area for the public to dispose of empty containers. Waste receptacles shall be emptied routinely and waste disposed of properly.
3) Collection areas shall be inspected daily and all trash and spilled liquids appropriately cleaned up.
4) The available capacity of waste liquid collection containers shall be routinely verified and waste removals scheduled, as needed.
5) Install appropriate controls to prohibit the overfilling of waste fluid collection containers.
6) Place appropriate spill response equipment in close proximity to drop-off areas.
7) If aboveground tanks are used to collect waste fluids, refer to BMP Fact Sheet GHP-07 (Aboveground Storage Tanks) for additional recommendations.

Organic Debris Collection

1) Routinely transfer collected organic debris/waste to a composting or disposal facility.
2) Do not permit composting of organic waste except at properly designed and permitted facilities.
3) Enact controls to prevent leaves and other windblown debris from entering stormwater inlets.

Municipal Waste / Recyclables Collection

1) Refer to BMP Fact Sheet GHP-01 (Waste Management) for additional recommendations.

STOCKPILES

GH-09

Not Applicable ☐ Applicable ☒

CONCERN

The County may stockpile various erodible materials, the type of material can vary depending on the needs of the County. Stockpiled material may include soil, sand, millings, slag, cinders, sawdust, landscaping bark, compost, etc. Exposed stockpiles can easily erode due to wind or precipitation and contribute suspended solids to stormwater runoff.

POLLUTION PREVENTION MEASURES

1) Maintain stockpiles of erodible materials within roofed storage buildings or covered storage bins, if feasible. If not, stockpile material on an impervious surface and cover the stockpile.
2) Temporary stockpiles should be placed on an impermeable membrane (tarp) for quick clean-up.
3) Locate stockpiles away from drain inlets, catch basins, swales, areas of concentrated stormwater flow, water bodies, and environmentally sensitive areas.
4) Divert stormwater flows away from/around the stockpiles using a diversion device (e.g., temporary swale, berm, sandbags, or diversion fence).
5) Cover temporary stockpiles of erodible materials with a tarp that has been adequately secured. The covers must be in place at all times when the stockpile is not in active use.
6) When accessing a portion of the stockpile, only remove a section of the cover to minimize exposure to the elements.
7) Use barriers to isolate stockpiled materials from high-traffic areas to prevent tracking of materials.
8) Sweep (do not wash or hose down) in front of material stockpile storage areas at regular intervals, following loading and unloading activities, and during times of heavy use.
9) If material is observed migrating from the stockpile, clean up all migrated material upon discovery and provide additional controls to reduce migration from the stockpile. If such measures are ineffective implement controls to capture pollutants before they migrate off-site (e.g. silt fencing, inlet filters, filter socks, at-grade inlet protection, etc.).
10) Minimize material stockpile inventory based on historical inventory/usage records and public safety operational needs.
11) Cold mix asphalt shall be stored on and covered with plastic sheeting or comparable material.
12) Routinely inspect outdoor material stockpiles to verify existing controls are functioning properly and for signs of erosion or material transport.

BMP Fact Sheet

DEICING MATERIALS

GH-10

Not Applicable ☐ Applicable ☒

CONCERN

When salt and other de-icing materials are stored outside and uncovered, they have a much higher risk of being eroded and transported offsite by stormwater. Improper de-icing material and sand storage may result in stormwater runoff containing elevated concentrations of sodium chloride and dissolved solids. Sodium chloride (e.g., road salt) is an effective deicer but can be highly corrosive to stormwater facilities. Smaller waterways are at a higher risk to increases in salinity, which can threaten aquatic species. Additionally, runoff containing sodium chloride has the potential to reach drinking water sources where small traces can adversely impact public health.

POLLUTION PREVENTION MEASURES

1) Bagged de-icing chemicals must be stored indoors. If stored outdoors bags must be kept on pallets (off the ground) and covered at all times. Bags must be intact without holes or openings.
2) Bulk de-icing materials shall be stored under cover and on an impervious surface.
3) Bulk salt storage areas/buildings shall not be overfilled so that salt spills out beyond the entrance of the storage area/building.
4) Bulk salt storage areas/buildings shall be maintained in a structurally sound condition and in a way that prevents the release of salt and the infiltration of stormwater. Deicing materials should not touch the sides of metal storage containers.
5) Barriers such as berms, gates, knee walls, tarps, and/or straw bales shall be placed at the entrances of bulk salt storage areas/buildings to prohibit the migration of salt and prevent contact with precipitation/stormwater runoff.
6) Routinely inspect storage areas for migrating materials or deterioration of containment structures. Sweep up all migrating materials upon discovery and repair the source of the migrating pollutant.
7) Loading areas should be constructed of impervious material and covered or enclosed, to the extent practical, to reduce potential contact with stormwater.
8) Minimize the distance de-icing materials are transported during loading/unloading activities.
9) Prevent and/or minimize the spillage of salt and de-icing materials during loading/unloading activities, immediately clean spilled or tracked materials.
10) Sweeping of storage and loading/unloading areas shall be conducted immediately following loading/unloading activities.
11) Do not store de-icing materials (bulk or bagged) over or immediately adjacent to drains or waterways.
12) Control site drainage by diverting stormwater run-on away from storage/loading areas using appropriate measures (e.g., curbing, berms, etc.).
13) Slope storage/loading areas to direct salt-contaminated runoff to an appropriate collection area, and in a manner that prevents the runoff from reaching adjacent soil or surface waters.
14) Excess salt shall be removed from salt handling equipment (trucks, spreaders, etc.) following use/prior to storage. All cleaning shall occur on an impervious surface, which is sloped or curbed to contain any washwater and direct it to a collection area for recycling or proper disposal.

Appendix A

GHP Site Inspection Checklist

GOOD HOUSEKEEPING PLAN (GHP)
SITE INSPECTION CHECKLIST

Facility Name: _____ **Inspection Date:** _____

Inspector Name: _____ **Inspector Signature:** _____

- The intent of this inspection is to ensure that the site is being properly maintained and that there are no visible signs of pollutants entering the stormwater system.
- **A shaded status box designates an item in a non-compliant status. Please provide an explanation for all non-compliant items and subsequently document all corrective actions performed.**
- Retain the completed checklists for five (5) years.

Item	Status			CORRECTIVE ACTIONS/COMMENTS *Items which cannot be corrected immediately must be reported to the GHP/NPDES Program Manager*
	Yes	No	N/A	
GENERAL HOUSEKEEPING				
1. Are exterior areas of the facility free of accumulated trash, debris, and unneeded materials?				
2. Are stormwater drains and inlets free from debris, sediment, and evidence of spills/releases?				
3. Is the facility free from signs of erosion?				
4. Are paved surfaces free of accumulated sediment?				
5. Is spill response equipment available in maintenance areas, fueling areas, hazardous material storage areas, and/or other required areas?				
6. Are spill kits and absorbent materials clearly labeled and accessible (i.e. items are not piled on top of or in front of spill kits)?				
7. Are spill kits secured from being stolen or misused?				
8. Is there a labeled container present for the disposal of used spill cleanup material?				

GOOD HOUSEKEEPING PLAN (GHP)
SITE INSPECTION CHECKLIST

Item	Status			CORRECTIVE ACTIONS/COMMENTS *Items which cannot be corrected immediately must be reported to the GHP/NPDES Program Manager*
	Yes	No	N/A	
9. Does spill response equipment (i.e. spill kits, absorbent materials) need to be replenished?				
WASTE MANAGEMENT				
10. Are areas around solid waste containers/roll-offs/compactors free of excessive trash accumulation or overflowing containers?				
11. Are areas around solid waste containers/roll-offs/compactors free of visible evidence (i.e. leaks, staining) of ongoing stormwater pollution?				
12. Are scrap metal containers in good order and free from evidence of leaking oil/grease?				
13. For dumpsters, roll-offs, and other waste receptacles, where leaks are observed, have appropriate controls (e.g. containment, spill response, etc.) been enacted?				
14. Are the lids (if present) to solid waste containers closed?				
15. Is street sweeping/vactor waste being managed appropriately (i.e. no evidence of material migration)?				
16. Is waste cooking grease managed appropriately (i.e. no evidence of spilled material or excessive staining)?				
VEHICLE & EQUIPMENT STORAGE				
17. Are stored vehicles/equipment free from leaks?				
18. If leaks are present, are they being managed appropriately (drip pan or other methods in place to capture released liquids)?				
19. Are storage areas free of visible evidence of chronic leaks/spills (i.e. significant staining)?				

GOOD HOUSEKEEPING PLAN (GHP)
SITE INSPECTION CHECKLIST

Item	Status			CORRECTIVE ACTIONS/COMMENTS *Items which cannot be corrected immediately must be reported to the GHP/NPDES Program Manager*
	Yes	No	N/A	
VEHICLE & EQUIPMENT REFUELING				
20. Are the areas around refueling areas free from evidence of spills or leaks?				
21. Are refueling areas free of used absorbent material that has not been swept/cleaned up?				
22. Do fuel dispensers and hoses appear to be in good working order and well-maintained?				
VEHICLE MAINTENANCE				
23. Is there any indication that vehicle maintenance activities are being conducted outdoors?				
24. Is there any indication that vehicle maintenance activities are contributing to stormwater pollution?				
VEHICLE & EQUIPMENT WASHING				
25. If performed on-site, does all vehicle/equipment washing occur indoors?				
26. Is wash water collected and disposed of properly?				
27. Is there any indication that vehicle/equipment wash water is being released to stormwater conveyances or pervious areas?				
MATERIAL STORAGE				
28. Are all outdoor storage areas free from visible signs of leaks or spilled material?				
29. Are material storage containers in good condition?				

GOOD HOUSEKEEPING PLAN (GHP)
SITE INSPECTION CHECKLIST

Item	Status			CORRECTIVE ACTIONS/COMMENTS *Items which cannot be corrected immediately must be reported to the GHP/NPDES Program Manager*
	Yes	No	N/A	
30. Are drums, totes, and other containers (that are <u>not</u> empty) stored off the ground and covered, or stored indoors?				
31. Are liquid-containing drums/totes located outdoors provided with secondary containment?				
32. Are containers that are located outdoors equipped with closed lids except when material transfers are occurring?				
33. Are materials, which could impact stormwater, stored away from heavy traffic areas, or protected from vehicle collisions?				
34. Are chemical storage containers properly labeled?				
35. If empty drums are stored outside, are all openings equipped with caps to prevent water intrusion?				
ABOVEGROUND STORAGE TANKS				
36. Are all storage tanks, and surrounding areas free from visible signs of leaks or spilled material?				
37. Do storage tanks appear to be in good working order (e.g. free of obvious signs of damage or malfunctioning equipment)?				
38. Are remote fills associated with tanks free of liquid and debris?				
RESIDENT DROP-OFF CENTERS				
39. Are waste collection areas clearly identified?				
40. Are used oil/antifreeze collection tanks, containment structures, and surrounding areas free from visible signs of leaks or spilled material?				

GOOD HOUSEKEEPING PLAN (GHP)
SITE INSPECTION CHECKLIST

Item	Status			CORRECTIVE ACTIONS/COMMENTS *Items which cannot be corrected immediately must be reported to the GHP/NPDES Program Manager*
	Yes	No	N/A	
41. Do used oil/antifreeze collection tanks appear to be in good working order (e.g. free of obvious signs of damage or malfunctioning equipment)?				
42. Are empty used oil/antifreeze containers being collected and disposed of in the trash?				
43. Are areas around waste/recyclables containers free of excessive trash accumulation or overflowing containers?				
44. Are areas around waste/recyclables containers free of visible evidence (i.e. leaks, staining) of ongoing stormwater pollution?				
45. Are organic debris collection areas free of visible evidence of ongoing stormwater pollution (e.g. leaves and debris in stormwater conveyances)?				
STOCKPILES				
46. Are material piles, including salt, soil, sand, and millings isolated (i.e. covered, bermed, etc.) to prevent stormwater run-on and run-off?				
47. Are areas surrounding material piles (e.g. salt, soil, sand, millings, etc.) free of tracked or migrated material?				
DEICING MATERIALS				
48. Are all deicing materials stored indoors or undercover?				
49. Are salt storage structures in good condition (e.g. no evidence of material escaping or stormwater infiltration)?				
50. Is the salt loading area clean?				

GOOD HOUSEKEEPING PLAN (GHP)
SITE INSPECTION CHECKLIST

Item	Status			CORRECTIVE ACTIONS/COMMENTS *Items which cannot be corrected immediately must be reported to the GHP/NPDES Program Manager*
	Yes	No	N/A	
51. If deicing materials are tarped, is the tarp secure and covering the entire pile?				
52. Are bags of salt stored indoors, or off the ground and covered?				

ADDITIONAL COMMENTS:

Appendix B

GHP Stormwater Conveyance System Inspection Checklist

GOOD HOUSEKEEPING PLAN (GHP)
STORMWATER CONVEYANCE SYSTEM INSPECTION CHECKLIST

Facility Name: _____ **Inspection Date:** _____

Inspector Name: _____ **Inspector Signature:** _____

- The intent of this inspection is to ensure the free flow of stormwater within on-site conveyance systems and prevent damage/flooding.
- **If maintenance is needed, please provide an explanation, and document all corrective actions performed.**
- **Inspections shall include visually accessible infrastructure only; at no time shall inspection personnel enter a confined space.**
- Retain the completed checklists for five (5) years.

Item	Item Checked (Y/N/NA)	Maintenance Needed (Y/N)	CORRECTIVE ACTIONS/COMMENTS *Items which cannot be corrected immediately must be reported to the GHP/NPDES Program Manager*
CATCH BASINS / INLETS			
1. Look for debris and sediment blocking catch basin grates. If found, remove.			
2. Look for damage or cracks to the frame, grate, basin walls or bottom. If found, schedule repairs or replacement.			
3. Look for sediment and debris in the catch basin sump. If sediment fills 60% of the sump or comes within 6” of a pipe it should be scheduled for cleaning.			
4. If any type of filtering device is present, verify that the filter is not clogged, torn, or damaged; clean if clogged, replace if damaged.			
PIPES / CULVERTS			
5. Look for evidence of clogged piping (e.g. visual obstructions, standing water within manholes/inlets structures, etc.). If found, remove or schedule cleaning.			
6. Verify vegetation growth, if present, does not impede water flow. If it does, mow, cut back, or remove.			

GOOD HOUSEKEEPING PLAN (GHP)
STORMWATER CONVEYANCE SYSTEM INSPECTION CHECKLIST

Item	Item Checked (Y/N/NA)	Maintenance Needed (Y/N)	CORRECTIVE ACTIONS/COMMENTS *Items which cannot be corrected immediately must be reported to the GHP/NPDES Program Manager*
7. Inspect for damaged piping, inlets, outlets, headwalls, wingwalls, or excessive erosion. If found, make or schedule repairs.			
DITCHES / TRAPEZOIDAL SWALES			
8. Check for erosion, slumping, or undercutting. If found, make or schedule repairs.			
9. Look for trash and sediment accumulation. Remove all trash and remove sediment if it will impede water flow or clog downstream structures.			
10. Verify vegetation growth does not impede water flow. If it does, mow, cut back, or remove. Remove any trees or shrubs growing within the ditch.			
11. Check the integrity of check dams, filter socks, or other flow dissipation/filtering devices within the ditch or swale. Perform or schedule service if they are clogged, damaged, or deteriorated.			
12. Check inlets and outlets for debris accumulation, damage, or erosion. If found, make or schedule repairs.			

ADDITIONAL COMMENTS:

GUIDANCE DOCUMENT
GOOD HOUSEKEEPING PLAN - STORMWATER CONVEYANCE INSPECTIONS

INTRODUCTION

Maintaining catch basins, stormwater inlets, and other stormwater conveyance structures on a regular basis will remove pollutants, prevent backups, and ensure the system functions as intended to avoid flooding.

Each GHP-covered facility is required to conduct routine stormwater conveyance system inspections to ensure the free flow of stormwater within the conveyance system(s). The GHP includes a *"GHP Stormwater Conveyance System Inspection Checklist"*, to be used when completing the required inspections. This document provides additional background and guidance to aid facility personnel in completing the inspections.

CATCH BASINS / INLETS

Catch basins and inlets are all points for stormwater to enter storm drain systems. These structures are typically part of a larger conveyance system with many interconnected components where the impairment of one component can compromise the functionality of the larger system. Inlets and catch basins are subject to functional impairment by a variety of conditions, including:

- Structural damage including from vehicles and plows
- Cracks/joint separation at piping (inlet and outlet) connections
- Leaking due to cracks and joint separation
- Missing or damaged grates and grate frames
- Corrosion
- Blockage caused by debris, sediment, vegetation, or other objects

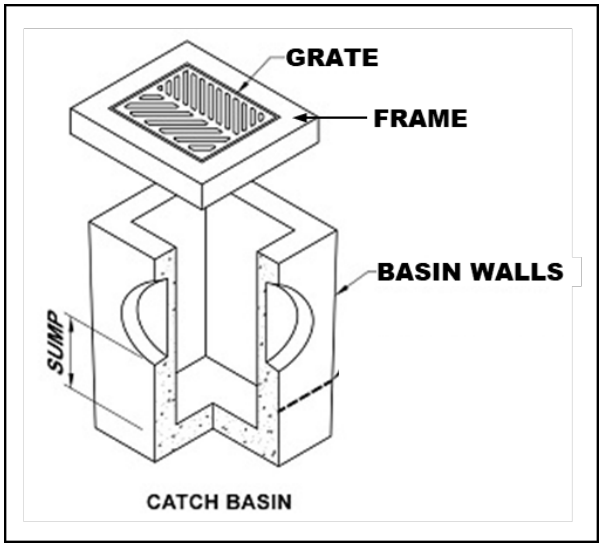

Figure 1 – Catch Basin Diagram

The following photos provide additional information related to the various inspection items, including examples of typical issues that may be encountered. The photo numbers correspond to the inspection checklist item number.

Inspection Item #1 [1]



Debris and sediment blocking inlet/catch basin grate.

Inspection Item #2 [2]



Damaged Grate

Inspection Item #2 [3]



Damaged Frame

Inspection Item #2 [4]



Failing brick walls with a stormwater inlet.

Inspection Item #2 [5]



Failing asphalt surrounding the inlet

[1] Grand Valley State University - https://www.gvsu.edu/groundswell/clogged-storm-drains-71.htm
[2] Georgia Department of Transportation – Stormwater System Inspection and Maintenance Manual, March 2020
[3] https://catchbasinauthority.ca/catch-basin-101/
[4] https://www.fixasphalt.com/catch-basin-repairs
[5] https://ccpia.org/catch-basin-and-manhole-inspections/

Inspection Item #3 [6]



Sediment and debris inside stormwater inlet

Inspection Item #3

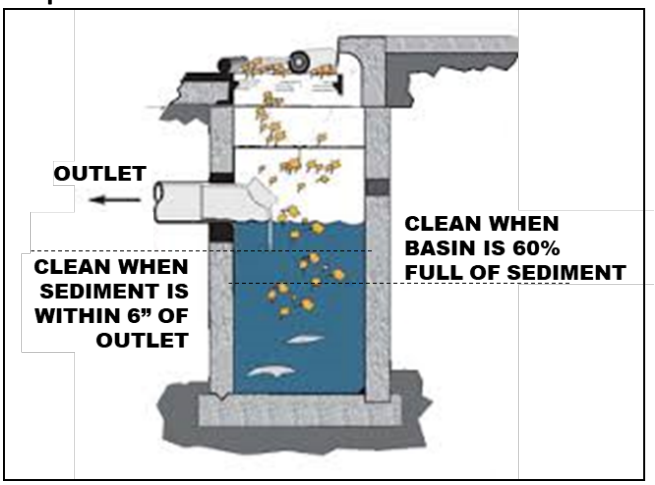

Remove sediment from a catch basin if it fills 60% of the sump or comes within 6" of a pipe.

Inspection Item #4 [7]



Example of inlet filter. Replace when filled or damaged.

Inspection Item #4 [8]



Example of an inlet filter sock, replace if damaged.

PIPES AND CULVERTS

Pipe systems are designed to convey stormwater runoff safely and effectively from inlets to various discharge points and outfalls. A culvert is a structure that channels water under an obstacle such as a roadway or railroad. These structures are subject to functional impairment by a variety of conditions, including:

- Blockage or obstruction due to build up of vegetation, debris, sediment, or other objects
- Cracks and/or joint separation
- Collapsed pipe
- Corrosion
- Root intrusion
- Lack of stabilization

[6] https://www.fixasphalt.com/catch-basin-repairs
[7] https://store.interstateproducts.com/products/Ultra-Drain-Guards/Ultra-Drain-Guard-Adjustable-Frame-Model
[8] https://www.newpig.com/pig-sediment-filter-sock/p/FLT787

Inspection Item #5 [9]



A pipe filled with sediment, inhibiting flow.

Inspection Item #5 [10]



Standing water around an inlet may indicate a blockage.

Inspection Item #6 [11]



Pipe conveyance filled with vegetation.

Inspection Item #7 [12]

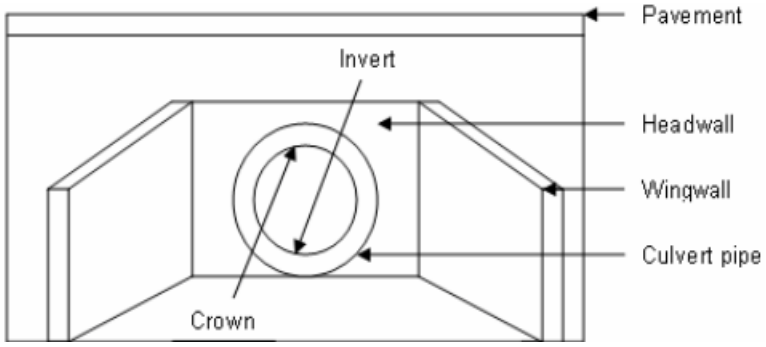

Diagram depicting various components of a culvert.

[9] Georgia Department of Transportation – Stormwater System Inspection and Maintenance Manual, March 2020
[10] https://www3.epa.gov/region9/water/npdes/stormwater-feature.html
[11] Georgia Department of Transportation – Stormwater System Inspection and Maintenance Manual, March 2020
[12] https://www.researchgate.net/figure/Components-of-a-Culvert_fig34_228685906

Inspection Item #7 [13]



A crack is the culvert headwall.

Inspection Item #7 [14]



Evidence of erosion around a culvert.

DITCHES AND SWALES

Ditches and swales serve similar functions. Both are used to convey stormwater. However, there are slight differences. A ditch is a narrow channel typically found along roads and at the edges of parking lots/driveways. A swale is like a ditch, but it is broad and shallow, and usually covered or lined with turfgrass or stone. Issues associated with these structures, which could impede their function include:

- Blockage or obstruction due to vegetation, debris, sediment, or other objects
- Erosion
- Rapidly moving water
- Lack of adequate vegetative cover for grass-lined channels

Inspection Item #8 [15]



Erosion and slumping within a drainage ditch.

Inspection Item #8 [16]



Slumping within a drainage swale.

[13] https://www.sbt-durabi.org/articles/xml/ARN0/
[14] https://lufkindailynews.com/news/local/culverts-crumbling-in-precinct-1/article_a9fed902-4379-5248-ab11-7471e2974298.html
[15] https://graniteseed.com/blog/how-to-stop-a-ditch-from-eroding/
[16] https://www.mnwcd.org/erosion-control

Inspection Item #9 [17]



Litter and debris within a ditch.

Inspection Item #9 [18]



Litter and debris within a swale.

Inspection Item #10 [19]



Cracks and joint separation in concrete channels, removal of vegetation may prevent future damage.

Inspection Item #11 [20]



Rock check dam across a channel.

Inspection Item #11 [21]



Filter sock check dams across a grass swale.

[17] https://craven.ces.ncsu.edu/2023/02/for-those-who-love-to-litter/
[18] https://www.cityoftulsa.org/government/departments/public-works/stormwater-quality/adopt-a-stream/
[19] Georgia Department of Transportation – Stormwater System Inspection and Maintenance Manual, March 2020
[20] EPA Stormwater Best Management Practice, Check Dams, December 2021
[21] EPA Stormwater Best Management Practice, Check Dams, December 2021

Inspection Item #12 [22]



Inlet to a rock-lined swale.

Inspection Item #12 [23]



Sediment accumulation at swale inlet.

END OF DOCUMENT

[22] https://www.stormwater.com/erosion-control/vegetation-management/article/13016118/inlet-protection-during-constructionand-after

[23] https://www.stormwater.com/erosion-control/vegetation-management/article/13016118/inlet-protection-during-constructionand-after

Appendix C

General Spill Response Procedures

SPILL RESPONSE AND NOTIFICATION PROCEDURES

A. Discovery of a Spill

1. Upon discovery of a spill, facility personnel should immediately assess the situation and determine if the spill is considered a "Minor" or "Major" spill. For a spill to be considered "Minor" all the following conditions must be satisfied:

    - ❖ The type of material spilled is known;
    - ❖ The spill is confined to the immediate work area;
    - ❖ The spill has not reached storm drains, sanitary sewer systems, open water, or surrounding soils;
    - ❖ The spill can be safely managed;
    - ❖ The employee can contain and clean up the spill with the PPE that is normally used in the work area;
    - ❖ The spill does not pose a serious threat of fire or an explosion; and
    - ❖ The spill does not pose conditions that are immediately dangerous to life or health.

2. If all the above conditions are met, the spill is considered "Minor". Refer to ***Section B*** of this document for appropriate response actions.

3. If all the above conditions are not met, then the spill is considered "Major". Refer to ***Section C*** of this document for appropriate response actions.

4. If a spill involves flammable liquids, ignitable vapors may be present - precautions must be taken to prevent ignition. Do not turn on or off equipment since sparks may be generated. Additionally, avoid the movement of equipment that could create static electricity. Larger spills of flammable liquids could pose a fire threat and would be considered a "Major" spill. Refer to ***Section C*** for appropriate actions.

B. Response to a "Minor" Spill

1. Identify the source of the spill and the direction in which the spill is heading.

2. Attempt to stop the spill at the source. Where applicable, the source of the spill shall be taken out of service until repairs can be made. If the spill is related to a fuel dispensing system, activate the Emergency Shut-Off (ESO) switch to prevent additional fuel disbursements.

3. If material is released outside a containment area, it is crucial that the material be contained as quickly as possible. Following proper safety procedures, use absorbent materials or diking to contain the spill. Prevent the spill from reaching storm drains, sanitary sewers, or open water. If a spill is flowing toward a drain, install temporary diking around the drain, block off the drain with a drain cover, or place absorbent material around the drain to prevent a discharge.

4. Once the spill has been stopped and contained, estimate the quantity of the spill. Consult applicable Safety Data Sheet (SDS) for material compatibility and environmental precautions. Note and follow recommendations regarding special precautions, spill response equipment, methods, or precautions. All cleanup work shall be conducted in accordance with existing safety protocols and SDS recommendations. Contact the facility Superintendent/Supervisor, or designee, for assistance if needed.

5. Recover or clean up the spilled material as much as possible. Material that cannot be reused must be discarded in accordance with state and federal regulations. Liquids absorbed by porous materials (e.g., wood, gravel, significant quantities of absorbent material, etc.) shall be placed into US DOT-approved 30-gallon or 55-gallon steel drums. Following cleanup, the container shall be secured and appropriately labeled to identify the contents and the date of the spill/cleanup. Containers shall be stored indoors and provided with secondary containment until transported off-site for disposal.

6. For spills that do not involve flammable liquids or other potential hazardous wastes, small quantities of used absorbent materials may be double bagged and disposed of along with municipal trash as long as all liquids have been absorbed (no free liquid may be present).

7. If the spilled material is a flammable liquid, corrosive liquid (pH ≤ 2 or ≥ 12.5), or other potential hazardous waste, all recovered product, impacted material, and used absorbent must be placed into a US DOT-approved containers/drums. Following cleanup, the container(s) shall be secured and appropriately labeled to identify the contents and the date of the spill/cleanup. Containers shall be stored indoors and provided with secondary containment until transported off-site for disposal. The facility Superintendent/ Supervisor, or designee shall be notified that a potential hazardous waste was released and that a waste characterization may be needed to facilitate proper disposal.

8. Surfaces that are contaminated by the spill shall be cleaned utilizing dry absorbent material. Tools and equipment that have been used in the cleanup must be decontaminated immediately after use. Decontamination water (if used) must be minimized, containerized, and disposed of properly.

9. If waste requires disposal, notify the facility Superintendent/Supervisor, or designee who will arrange for the proper characterization and disposal of any waste material. Representative sampling and analysis may be necessary to properly characterize the waste. The waste must be transported and disposed of in compliance with all applicable laws and regulations. Waste manifests, trip tickets, or bills of lading (if required) for waste disposal shall be kept on file.

10. Facility personnel shall restock/replace spill response equipment and absorbent materials used during the clean-up efforts.

11. The facility Superintendent/Supervisor, designee, or other appropriate County personnel shall be notified of the spill in accordance with ***Section D*** of this document.

C. Response to "Major" Spill

A "Major" spill is any discharge that does not meet the definition of a "Minor" spill. Any employee or contractor observing, being involved with, or recognizing a potential or actual spill of oil or other hazardous material, other than a "Minor" spill is responsible for performing the following actions:

1. If there is no danger to human health, attempt to stop and contain the spill at the source. If the spilled material is unknown, if PPE other than that which is typically used in your work area, is necessary to approach the spill area, or if assistance is required to stop the spill, do not attempt to contain the spill. If the spill is related to a fuel dispensing system, activate the Emergency Shut-Off (ESO) switch.

2. Most County employees lack the appropriate training to respond to "Major" spills. If the spill is of an unknown substance, is of a quantity that cannot be safely managed, or poses other risks beyond the training level of the employee, the employee should not attempt to contain or clean up the spill.

3. Evacuate individuals from the area and keep personnel away from the impacted area.

4. Immediately notify the facility Superintendent/Supervisor, or designee of the incident. The notified individual will determine the need for further evacuations and contact emergency response personnel (911), as necessary. *If a situation represents an immediate and grave danger to personnel, the public, structures, or other infrastructure, the individual discovering the incident may call 911 directly without first notifying facility management.*

5. The facility Superintendent/Supervisor or designee will determine if assistance from emergency response contractors is required to clean up the incident and will coordinate such spill response efforts with spill response contractors and other County agencies and first responders.

6. Facility personnel will provide assistance to emergency responders, as appropriate.

D. Reporting a Spill (Internal Notifications)

1. Once a spill is contained and cleanup operations have been initiated, the individual discovering the spill shall notify the appropriate County representatives and provide the following information:

    a) Identify the location, date, and time of the incident;
    b) Identify the type of material spilled or discharged;
    c) Estimate the quantity spilled and the rate of the spill;
    d) Identify the cause of the spill or discharge;
    e) Identify impacted media or infrastructure (soil, storm drains, open water bodies, etc.);
    f) Determine the extent of injuries involved; and
    g) Provide response measures implemented by the facility personnel.

E. Reporting a Spill (Regulatory Notifications)

State of Maryland Reporting Requirements (COMAR 26.10.01.05)

1. Upon discovery of a spill, the Responsible Person shall notify the MDE Emergency Response Division **within two (2) hours** by calling 866-633-4686. The caller shall be prepared to provide the following information:

    a) The time and date of the spill;
    b) The location and cause of the spill;
    c) The mode of transportation or type of facility involved;
    d) Type and quantity of oil spilled;
    e) Details regarding any assistance required;
    f) The name, address, and telephone number of the person making the report; and
    g) Any other pertinent information requested by the Department.

2. MDE will provide further guidance on additional responsibilities.

3. Within **ten (10) working days** of the completed removal and clean-up activities, the Responsible Person shall prepare a report using either County letterhead detailing the incident. The report shall contain the following:

    a) Date, time, and place of the spill;
    b) The amount and type of oil or hazardous substance spilled;
    c) A complete description of circumstances that contributed to the spill;
    d) A complete description of the containment and removal operations performed, including disposal sites to which oil refuse was transported;
    e) Procedures, methods, and precautions instituted to prevent the recurrence of an oil spill from the facility involved;
    f) Any other information considered necessary or required by the MDE for a complete description of the incident; and
    g) A certification that the information provided is true and correct to the knowledge of the person signing the report.

4. The completed report shall be submitted to mdeerd.mema@maryland.gov or faxed to 410-537-3932.

5. A digital copy of the completed report and any accompanying documentation shall be retained

Federal Reporting Requirements - National Response Center (40 CFR 110)

1. If any of the following criteria are met the Responsible Person shall notify the National Response Center (NRC) **within two (2) hours** of the spill discovery by calling 800-424-8802 or 202-426-2675.

    - ❖ The spill has caused a film, sheen, or discoloration of the surface water or shorelines;
    - ❖ The material spilled will violate applicable water quality standards (surface water or groundwater); or
    - ❖ The spill has caused a sludge or emulsion to be deposited beneath the surface of the water or on the shoreline.

2. At a minimum, the following information shall be provided to the NRC:

    a) Name, organization, and telephone number of reporting party;
    b) Name and address of the responsible party;
    c) Date, time, and location of the incident;
    d) Source and cause of the discharge;
    e) Type of material(s) discharged;
    f) Quantity of materials discharged;
    g) Danger or threat posed by discharge;
    h) Number and types of injuries (if any);
    i) Weather conditions at the incident location; and
    j) Other information to help emergency personnel respond to the incident.

3. If unable to report to the NRC, reports can be made to the EPA Regional Office at 800-438-2474 or the U.S. Coast Guard (USCG) at 202-372-1001. The NRC, EPA, or USCG will provide further guidance.

4. A digital record of the NRC notification and any accompanying documentation shall be retained on-site.

Federal Reporting Requirements - EPA Regional Administrator (40 CFR 112.4)

1. If the facility where the spill occurred is regulated under 40 CFR 112 and is required to have a Spill Prevention, Control, and Countermeasures (SPCC) Plan, the Responsible Person shall report the spill to the EPA Region III Administrator when any of the following criteria are met:

   - More than 1,000 gallons of oil is discharged to navigable waters or adjoining shorelines in a single incident; or
   - More than 42 gallons of oil is discharged to navigable waters or adjoining shorelines in each of two incidents occurring within any twelve-month period.

2. The report shall be made in writing **within 60 days** of the spill and shall contain:

   a) Name and location of the facility;
   b) Owner/operator name;
   c) Maximum storage/handling capacity of the facility and normal daily throughput;
   d) Corrective actions and countermeasures taken;
   e) Adequate description of the facility including maps, and flow diagrams;
   f) Cause of the discharge to navigable waters, including a failure analysis;
   g) Additional preventative measures taken or planned to minimize discharge reoccurrence; and
   h) Other information required by the EPA Regional III Administrator.

3. The report shall be submitted to the EPA Regional Administrator at the following address:

   EPA Regional Administrator
   US EPA Region 3
   1650 Arch Street (3RA00)
   Philadelphia, PA 19103-2029

4. A copy of the report shall be retained in the facility SPCC Plan.

Appendix D

Training Records

GOOD HOUSEKEEPING PLAN (GHP)
TRAINING ATTENDANCE LOG

FACILITY NAME: _____

DATE	NAME *(PRINT)*	SIGNATURE

By signing I affirm that I have completed the required annual training; and I am aware of and understand my responsibilities under this Plan.

GOOD HOUSEKEEPING PLAN (GHP)

Jarrettsville Elementary School
3818 Norrisville Road
Jarrettsville, MD 21084

June 30, 2025

TABLE OF CONTENTS

1.0 BACKGROUND & INTRODUCTION 1
1.1 Objectives 1
1.2 Potential Stormwater Pollutants 1
2.0 RESPONSIBILITIES 3
2.1 GHP Implementation 3
2.2 Plan Review and Modification 3
2.3 Inspections 3
2.3.1 GHP Site Inspections 3
2.3.2 Conveyance System Inspections 4
2.4 Training 4
3.0 BEST MANAGEMENT PRACTICES (BMPs) 5
3.1 Applicability of BMP Fact Sheets 5
3.2 BMP Fact Sheets 5

List of Tables

TABLE 1-1 POTENTIAL STORMWATER POLLUTANTS AND THEIR SOURCES 2

List of BMP Fact Sheets

GH-01 - Waste Management
GH-02 - Vehicle and Equipment Storage
GH-03 - Vehicle/Equipment Refueling
GH-04 - Vehicle Maintenance
GH-05 - Vehicle/Equipment Washing
GH-06 - Material Storage
GH-07 - Aboveground Storage Tanks
GH-08 - Resident Drop-Off Centers
GH-09 - Stockpiles
GH-10 - Deicing Materials

Appendices

Appendix A: GHP Site Inspection Checklist
Appendix B: GHP Stormwater Conveyance Inspection Checklist
Appendix C: General Spill Response Procedures
Appendix D: Training Records

List of Acronyms

AST	-	Aboveground Storage Tank
BMP	-	Best Management Practice
CFR	-	Code of Federal Regulations
GHP	-	Good Housekeeping Plan
MDE	-	Maryland Department of the Environment
MS4	-	Municipal Separate Storm Sewer System
NPDES	-	National Pollutant Discharge Elimination System
SPCC	-	Spill Prevention, Control, and Countermeasure Plan

1.0 BACKGROUND & INTRODUCTION

Polluted stormwater runoff has the potential to enter the County's storm sewer systems (referred to as a municipal separate storm sewer system or MS4), and then discharge, untreated, into local water bodies. To address this potential stormwater pollution, the County is required to obtain a NPDES permit from the Maryland Department of the Environment (MDE). The NPDES Permit requires the County to take actions to prevent stormwater pollution, maintain storm sewer systems, monitor stormwater discharges, and develop and implement comprehensive management programs to minimize the discharge of pollutants from the storm sewer system.

To comply with Part IV.D.4.b of the County's Phase I MS4 Permit, the County must develop, implement, and maintain a Good Housekeeping Plan (GHP) for certain County-owned properties not required to be covered under Maryland's General Permit for Discharges from Stormwater Associated with Industrial Activities *(General Permit 12-SWA / 20-SW).*

To support this effort, a *"Good Housekeeping Plan Applicability Certification"* has been developed to evaluate and document if a specific County-owned facility is subject to the GHP requirements. The *"GHP Applicability Certification"* includes the following ten (10) potential stormwater polluting activities. If any of the covered activities are performed at the facility, then that facility is required to implement a site-specific GHP. The GHP will include each of the potential stormwater polluting activities identified in the *"GHP Applicability Certification"* and corresponding pollution prevention procedures.

- Waste Management
- Vehicle and Equipment Storage
- Vehicle/Equipment Refueling
- Vehicle Maintenance
- Vehicle/Equipment Washing
- Material Storage
- Aboveground Storage Tanks
- Resident Drop-Off Center
- Stockpiles
- Deicing Materials

1.1 Objectives

The GHP was developed to outline suitable practices, procedures, and protocols, or Best Management Practices ("BMPs") for reducing and/or preventing stormwater pollution associated with operations at covered County-owned properties. The intent of the pollution prevention procedures included in the GHP is to limit the release of materials with the potential to impact stormwater, this includes reducing or eliminating (to the extent practical):

- The occurrence of spills and leaks;
- The accidental dumping or release of materials;
- The accumulation of waste, trash, debris, unused parts/equipment, etc.;
- The exposure of hazardous materials to precipitation/run-off;
- Stormwater run-off contamination by improperly stored materials; and/or
- Illicit discharges to the storm drain system.

1.2 Potential Stormwater Pollutants

Table 1-1 on the following page provides a list of common potential pollutants that may result from the GHP-regulated activities identified above. Understanding the sources of these pollutants can help in achieving the goals and objectives of the GHP program.

TABLE 1-1 POTENTIAL STORMWATER POLLUTANTS AND THEIR SOURCES

		Waste Management	Vehicle/Equipment Storage	Vehicle/Equipment Refueling	Vehicle Maintenance	Vehicle/Equipment Washing	Material Storage	Aboveground Storage Tanks	Resident Drop-Off Center	Stockpiles	Deicing Materials
Pollutants	**Sources**	**Associated GHP Activity**									
Sediment	Land disturbance; erosion; paved surfaces; material stockpiles; waste storage; salt/abrasive application	X				X	X		X	X	X
Hydrocarbons *(petroleum compounds)*	Leaking vehicle and equipment; vehicle and equipment cleaning; spills; improper storage; maintenance activities; scrap metal disposal; improper disposal	X	X	X	X	X	X	X	X		
Metals	Vehicle brake and tire wear; vehicle/equipment exhaust; batteries; galvanized metal; paint and wood preservatives; fuels, pesticides, and cleaners; vehicle fueling, maintenance, and washing; industrial waste	X	X	X	X	X	X	X	X		
Toxic Chemicals	Pesticide application; improper chemical storage; leaks and spills from storage containers; leaking vehicles; maintenance activities	X	X		X	X	X	X	X		
Chlorides	De-Icing chemicals										X
Trash/Debris	Improper waste storage and disposal; leaking trash containers; littering; poor housekeeping	X	X				X		X		
Nutrients (nitrogen and Phosphorus)	Fertilizers; malfunctioning septic systems; sewer overflows; animal/pet waste; vehicle washing; decaying grass and leaves; leaking trash containers; atmospheric deposition	X				X	X		X		

2.0 RESPONSIBILITIES

2.1 GHP Implementation

A separate GHP is required for each covered facility. The following individual *(identified by name and/or title)* is accountable for the administration and implementation of the GHP at this facility and has the authority to commit the necessary resources to implement this Plan.

_____

Name and/or Title of Responsible Person

The Responsible Person listed above shall ensure that facility personnel involved in any GHP-covered activities identified in this Plan, are provided with access to, and are familiar with, the contents of this Plan.

2.2 Plan Review and Modification

The *"GHP Applicability Certification"* completed for this facility must be reviewed and updated once every permit term, or within one (1) year of substantial changes to a facility's operations that could reasonably contribute to stormwater pollution. Any newly constructed/acquired facility must be assessed within one (1) year of initiating operations at the facility. The facility's GHP must be amended and reissued to the facility within one (1) year of any changes to the facility's *"GHP Applicability Certification"*.

When warranted, the BMP Fact Sheets provided in Section 3.0 may need to be updated or revised. At the same time, additional BMP Facts Sheets may be added. The need for such updates or modifications will be at the discretion of the County's GHP Program Administrator.

2.3 Inspections

The County's MS4 permit requires each facility covered by a GHP to have the following:

1. Written procedures for annually assessing County properties to prevent the discharge of pollutants, spills, and leaks into the County's storm sewer system; and

2. Written procedure for performing stormwater conveyance system inspections and for removing debris that may cause clogging, backups, and flooding.

To meet these requirements, each facility that is covered by a GHP will be required to complete routine site inspections and stormwater conveyance system inspections as detailed below. Facility management will be responsible for ensuring the necessary inspections are completed within the required timeframes, that corrective actions (if needed) are performed, and that records of inspections and completed corrective actions are maintained for at least five (5) years.

2.3.1 GHP Site Inspections

The GHP Site Inspection will be performed to ensure that each GHP-covered facility is being properly maintained and that there are no visible signs of pollutants entering the stormwater system. GHP facilities shall utilize the *"GHP Site Inspection Checklist"*, provided in ***Appendix A*** to complete the required inspection. At a minimum, each facility is to be inspected every five (5) years.

2.3.2 Conveyance System Inspections

Stormwater conveyance systems are generally comprised of curbs and gutters, catch basins, inlet structures, swales, channels, piping, culverts, detention ponds, outfalls, or other structures that are used to collect, contain, and convey stormwater runoff.

The unimpeded movement of stormwater through conveyance systems is critical in avoiding backups and flooding, which can impede facility operations and damage property. Routine inspections and preventative care of stormwater conveyance systems can ensure these systems function as intended and prevent the need for costly and time-consuming repairs and retrofits.

Each GHP-covered facility is required to conduct routine stormwater conveyance system inspections to ensure the free flow of stormwater within the conveyance systems. GHP-covered facilities shall utilize the *"GHP Stormwater Conveyance System Inspection Checklist"*, provided in ***Appendix B*** to complete the required inspections. At a minimum, facility conveyance system inspections are to be conducted every five (5) years.

2.4 Training

As part of the GHP requirements within the County's Phase I NPDES permit, annual training must be provided to all appropriate staff and contractors. Such training shall be provided to any individuals responsible for implementing the GHP, performing the required inspections, or involved in any of the GHP-covered activities identified in this Plan. The required training shall focus on the duties and responsibilities assigned to site personnel in implementing the GHP and the best management practices (BMPs) prescribed in this Plan for preventing, reducing, and eliminating the discharge of pollutants during facility activities.

The County's MS4/GHP Program Coordinator will be responsible for developing the required training and disseminating it to GHP-covered facilities. Each GHP-covered facility will be responsible for identifying staff/contractors who must attend annual training, ensuring identified staff complete the required training, and maintaining records that document training dates and attendees. Training records and other documentation shall be maintained in ***Appendix D*** of this Plan.

3.0 BEST MANAGEMENT PRACTICES (BMPs)

This section contains a BMP Fact Sheet for each of the ten (10) GHP-regulated activities. The County's operations are not limited to the BMPs contained within this document; nor is the County required to implement all of the pollution prevention measures identified within each BMP Fact Sheet. The County should select and implement those measures that are applicable and have the greatest potential for reducing stormwater pollution.

The BMP Fact Sheets contained within this document offer recommended protocols for a particular activity. These pollution prevention measures are considered non-structural BMPs with a focus on source control of potential pollutants.

3.1 Applicability of BMP Fact Sheets

The *"GHP Applicability Certification"* completed for this facility has identified the activities conducted at this facility that require coverage under this Plan. Each of the BMP Fact Sheets shall be marked as to whether they are applicable or not applicable to this facility. The Applicable/Not Applicable indicator on each BMP Fact Sheet can be revised in response to changes in operations at the facility.

3.2 BMP Fact Sheets

BMP Fact Sheets can be found on the following pages. For the sake of consistency, the general outline of a BMP Fact Sheet will be as follows:

- Identification of GHP-covered activity.
- Applicability of the BMP Fact Sheet to the facility.
- A general description of the concern the activity poses to stormwater.
- Recommended pollution prevention measures for reducing/eliminating stormwater pollution.
- Additional sources of information, if applicable.

BMP Fact Sheet

WASTE MANAGEMENT

GH-01

Not Applicable ☒ Applicable ☐

CONCERN

Improperly managed waste can allow trash and debris to be washed into storm drains which poses a concern to water quality, marine life, and public health. It also has the potential to create obstructions in the drainage system, which can lead to backups and flooding. Additionally, improper storage and handling of waste materials can allow pollutants including oils and greases, toxic and chemical compounds (including nutrients), bacteria, metals, and other potentially hazardous wastes to enter waterways.

POLLUTION PREVENTION MEASURES

General *(applicable to all waste management activities)*

1) Provide suitable containers, preferably with working covers, to collect waste materials.
2) Ensure that appropriate waste containers are available in areas where waste is generated.
3) Provide a cover over waste storage areas, if feasible.
4) Avoid positioning waste receptacles near storm drains, water bodies, or areas of concentrated runoff.
5) Ensure that lids to waste containers *(if present)* are kept closed to prevent the intrusion of precipitation and prevent trash from blowing out of the receptacle.
6) For waste receptacles, which do not have lids and could leak, containers should be inspected regularly and controls (e.g., containment, spill response, etc.) shall be enacted whenever leaks or dry-weather discharges are observed.
7) Routinely inspect waste containers, roll-offs, compactors, and other waste receptacles for the presence of excessive waste accumulation and overflowing containers.
8) Ensure that wastes accumulating on the ground are placed in a suitable waste container.
9) Ensure that wastes are removed from the facility regularly by a licensed and contracted vendor.
10) Repair or replace damaged waste container lids.

Trash Compactors

1) Routinely inspect trash compactors for malfunctioning equipment or leaking hydraulic oil and provide the appropriate spill response if leaking equipment is encountered.
2) Regularly inspect compactors for leaking fluids and implement appropriate controls such as spill response/cleanup, collection or diversion of released fluids, providing secondary containment, etc. whenever leaks or dry-weather discharges are observed.

Scrap Metal Collection Containers

1) Avoid placing oily or grease-covered items in uncovered scrap metal recycling collection containers. If needed, wrap oily/greasy items in plastic garbage bags before placing them in the collection container.

Hazardous/Universal Wastes

1) Ensure that hazardous waste and universal wastes (e.g., batteries, bulbs, etc.) are collected and stored indoors or within covered collection containers.
2) Verify that hazardous/universal waste collection containers are in good condition, not leaking, and compatible with the wastes being stored.

Street Sweeping / Vactor Truck Material Storage

1) Do not site storage areas near storm drains, open water bodies, or areas of concentrated runoff.
2) Install sediment control devices (e.g. silt fence, silt socks, hay bales, etc.) around the staging area. Inspect these controls regularly and replace them as needed.
3) Cover the materials staging area, if feasible.
4) Provide oil-absorbent booms if necessary to control oily discharge. Inspect and replace booms regularly.
5) The staging area should be checked periodically for evidence of sediment migrating outside of the staging area. Material that has migrated out of the staging area should be promptly swept and returned to the staging area or disposed of.

Waste Cooking Oil/Grease

1) Maintain storage containers indoors or within a covered location, if feasible.
2) Storage containers shall be secured to prevent infiltration of precipitation and accidental/intentional spills or releases.
3) Carefully transfer waste oil/grease to the appropriate collection container to avoid spills.
4) Maintain suitable spill response equipment near collection containers. Immediately clean up any spilled oil/grease. Keep the exterior of the collection container clean and free of spilled oil/grease.
5) Provide secondary containment for collection containers, if feasible.

BMP Fact Sheet

VEHICLE AND EQUIPMENT STORAGE

GH-02

Not Applicable ☒ Applicable ☐

CONCERN

Vehicles and equipment may be stored onsite to support various County operations (e.g., construction, maintenance, snow removal, roadside assistance, mass transit, mowing, etc.). Examples of County owned and operated vehicles and equipment stored onsite at any given time include but are not limited to, the following: cars, trucks, buses, emergency response vehicles, garbage trucks, heavy equipment (backhoes, frontend loaders, etc.), forklifts, towable generators, portable light stands, and roadside equipment. Vehicle and equipment storage is considered a pollutant source due to the potential for incidental releases of petroleum products, lubricants, and various automotive fluids.

POLLUTION PREVENTION MEASURES

1) When possible/practical, store vehicles and equipment inside or under cover to prevent exposure to precipitation.
2) If vehicles or equipment must be stored outside, store vehicles/equipment in designated areas away from areas of concentrated runoff, storm drains, and other stormwater conveyances.
3) Vehicles and equipment shall be staged on impervious (asphalt or concrete) surfaces;
4) Keep truck beds clean and ensure potential stormwater pollutants are stored in closed containers, covered, or otherwise protected from stormwater exposure.
5) Conduct routine visual inspections of vehicles and equipment for the presence of leaks and respond accordingly.
6) Leaking vehicles/equipment should be moved inside or under cover. At a minimum, drip pans or absorbent pads shall be used to contain the leak until the vehicle/equipment can be relocated and the leak addressed.
7) Drain all fluids from wrecked or heavily damaged vehicles and equipment before storage.
8) Have an adequate supply of appropriate spill response equipment readily available and clean up all spills and leaks immediately utilizing dry cleaning techniques (e.g. absorbents and brooms).
9) Train staff in spill response so that incidents are addressed in a timely fashion.
10) Do not wash down areas where leaks have collected on ground surfaces; use dry cleaning methods such as granular absorbents and brooms.

VEHICLE AND EQUIPMENT REFUELING

Not Applicable ☒ Applicable ☐

CONCERN

Refueling activities associated with County vehicles and equipment can result in a discharge of fuel (gasoline and diesel fuel), which has the potential to enter the storm drain system and/or a nearby waterway. Such releases can introduce hydrocarbons, metals, and other toxic chemicals to stormwater runoff.

POLLUTION PREVENTION MEASURES

General Procedures *(applicable to all refueling activities)*

1) Routinely *(at least daily)* inspect the fuel dispensing area for any spills or leaks.
2) Routinely inspect fuel dispensing equipment looking for leaking or damaged equipment. Damaged or malfunctioning equipment shall be taken out of service until it has been repaired.
3) Fuels will only be dispensed into authorized vehicles, equipment, and approved containers.
4) Vehicle operators must remain outside of their vehicles and in attendance of fuel dispensers at all times while dispensing fuel.
5) Third-party contractors must be trained in proper refueling procedures and pollution prevention.
6) Do not utilize a foreign object to keep the dispenser nozzle in the open position. If present, a "hold-open" latch on the nozzle may be used.
7) Do not "top off" a vehicle's fuel tank once the dispenser nozzle's automatic shut-off has been activated. Topping off tanks may result in spills. Post signs in fueling areas warning vehicle operators against "topping off" of vehicle fuel tanks.
8) After refueling has stopped, allow several seconds to pass before removing the nozzle and returning it to the dispenser. This will prevent incidental dripping from the nozzle.
9) Employees refueling vehicles shall note the location of the "Emergency Fuel Shut Off" switch, to be used to stop the flow of fuel to the dispensers in the event of a release or emergency.
10) Have an adequate supply of appropriate spill response equipment readily available and clean up all spills immediately utilizing dry cleaning techniques (e.g. absorbents and brooms).
11) Immediately clean up and dispose of used absorbent material.
12) Do not wash down fueling areas; use dry cleaning methods such as granular absorbents and brooms.
13) Conduct refueling activities over impervious (e.g. concrete) surfaces. Place drip pans or absorbent pads under the nozzle if fueling occurs over a permeable surface such as grass or soil.
14) Install oil control devices in storm drains that may receive contaminated runoff from fueling areas.
15) Cover fueling areas with a canopy or roof to prevent direct contact with rainfall. Direct run-on away from fueling areas and collect fueling area run-off in a dead-end sump or oil-water separator.

Mobile Equipment Refueling

1) Refuel equipment on an impervious surface, downgradient of, and at the farthest practical distance from any storm drain, stormwater conveyance, stormwater management feature, or waterway.
2) Utilize secondary containment when refueling equipment (when practical).
3) Ensure mobile refuelers are parked in designated locations and away from areas of concentrated run-off, storm drains, and other stormwater conveyances.
4) Ensure that procedures are in place and that staff is properly trained in spill response/cleanup so that leaks and spills are addressed appropriately and promptly.

BMP Fact Sheet

VEHICLE MAINTENANCE

GH-04

Not Applicable ☒ Applicable ☐

CONCERN

Vehicle and equipment maintenance can impact the water quality of nearby waterways by exposing stormwater to various pollutants including petroleum hydrocarbons, solvents, antifreeze/coolants, used oil, lubricating oil, grease, brake fluid, metals, and various chemicals. Additionally, vehicles that are wrecked or awaiting repair can be a source of pollution if leaking fluids are not properly controlled.

POLLUTION PREVENTION MEASURES

1) Conduct vehicle and equipment maintenance activities indoors.
2) Make sure incoming vehicles and equipment are inspected for leaking fluids and oil.
3) Move leaking vehicles or equipment indoors or under cover as soon as possible. At a minimum, a drip pan or absorbent pads shall be utilized to contain the leak until the vehicle/equipment can be relocated and the leak addressed.
4) Avoid performing maintenance on vehicles in close proximity to exterior doorways, which may allow released fluids to migrate outdoors.
5) Have an adequate supply of appropriate spill response equipment readily available and clean up all spills and leaks immediately utilizing dry cleaning techniques (e.g. absorbents and brooms).
6) Keep maintenance areas neat and well organized. Remove dirt, debris, and used absorbent regularly.
7) Inspect maintenance areas as well as maintenance equipment on a routine basis.
8) Store vehicles, parts, and generated wastes indoors or off the ground and under cover whenever possible. When practical, provide secondary containment.
9) Promptly transfer used fluids to the proper waste container; do not leave full drip pans or other open containers around the shop. Empty and clean drip pans and containers regularly.
10) Waste liquids shall not be poured into floor drains, sinks, outdoor storm drain inlets, or other storm drains or sewer connections. Liquid wastes are to be collected in properly labeled containers and disposed of by a licensed waste hauler or other appropriate method.
11) Store leaking batteries in a sealed container and provide secondary containment, if feasible.
12) Clean all parts indoors utilizing a self-contained parts washer.
13) Do not hose down indoor service areas to storm drains or areas where it can seep into groundwater.
14) Maintain floor drains in good working order and inspect for proper function on a routine basis. Consider plugging floor drains that discharge to the storm sewer.
15) Ensure oil/water separators (if present) are maintained in proper working order and are checked on a routine basis for the presence of oil.
16) If maintenance work must be performed outdoors, adhere to the following requirements:
    - Conduct maintenance activities over an impervious surface, away from stormwater inlets.
    - Cover outdoor maintenance areas and direct stormwater run-on away from the area.
    - Use drip pans or drop cloths underneath the equipment to catch leaks and drips.
    - Have an adequate supply of appropriate spill response equipment readily available.
    - Clean all spills immediately using dry cleaning techniques (e.g. absorbents and brooms).
    - Avoid performing maintenance activities during precipitation events.
    - Limit temporary outdoor maintenance activities to a single shift/day if additional time is needed to cover the work area at the end of each day/shift.

VEHICLE AND EQUIPMENT WASHING

Not Applicable ☒ Applicable ☐

CONCERN

Vehicle and equipment washing can generate washwater that contains oil, grease, organic compounds, surfactants, phosphates, metals, and suspended solids. If vehicles/equipment are washed outdoors on impervious surfaces, dirty washwater can contaminate stormwater that ends up in waterways. Washing equipment over pervious surfaces can allow washwater to seep into the ground contaminating groundwater.

POLLUTION PREVENTION MEASURES

1) Vehicle and equipment washing should only be conducted in designated indoor wash bays that capture and recycle washwater to the extent practical.
2) Wastewater from the washing facility should be discharged to the sanitary sewer system under the authorization of a wastewater discharge permit issued by the local municipal authority.
3) The floor of indoor vehicle wash bays should be completely bermed or sloped to collect wash water and prevent migration outdoors.
4) No other activities (e.g., fluid changes, repairs, material storage) shall be performed in wash areas.
5) Keep the wash bay neat and well organized. Sweep or pick up all trash and debris daily or as needed.
6) Solid materials accumulated on vehicles or in vehicle beds (e.g. salt, soil, grass, etc.) shall be knocked off or otherwise removed from the vehicle (while inside the wash bay) prior to washing. Solid materials shall be collected and disposed of properly.
7) For vehicles too large to completely fit in the wash bays, only the portion of the vehicle physically located in the confines of the wash bay shall be cleaned. The vehicle shall then be rotated to allow for the remaining portion of the vehicle to be washed.
8) Use nozzles that automatically turn off water when not in use and consider high-pressure, low-volume sprays.
9) Avoid detergents as much as possible. If detergents are necessary, use a biodegradable, phosphate-free detergent.
10) If discharging to an oil-water separator, use a non-emulsifying detergent.
11) Inspect floor drain systems, holding tanks, and conveyances associated with designated wash areas regularly. Maintain oil/water separators and/or process flowthrough separators on a routine basis.
12) Use commercial car washes when vehicle or equipment washing cannot be performed onsite without causing impacts to stormwater.
13) If washing must occur onsite and outdoors, use a designated impervious area that is marked with posted signs indicating proper washing procedures. This area must be bermed to contain the wash water and graded to direct the wash water to the sanitary sewer, an oil-water separator, a holding tank, a dead-end sump, or other containment area. Captured water shall be disposed of properly.
14) Avoid steam cleaning and engine/undercarriage washing which can produce high pollutant concentrations. If steam cleaning or engine washing is necessary, perform such cleanings within isolated indoor areas, and ensure wash water is treated and discharged to the sanitary sewer (if permitted to do so) or captured for off-site disposal.
15) Train staff in proper washing techniques and how to confine washing to designated wash areas.
16) Consider alternatives to washing such as using air to blow grass and debris from small equipment, wet-wiping equipment with rags, etc.

BMP Fact Sheet

MATERIAL STORAGE

GH-06

Not Applicable ☒ Applicable ☐

CONCERN

The storage of petroleum products, chemicals, paints, cleaners, pesticides, fertilizers, bags of erodible materials like sand, cement, and soil, and other potential pollutants can negatively impact surface waters through the accidental releases or leaching of materials into stormwater. Unprotected outdoor storage areas can generate a wide range of stormwater pollutants, such as sediment, nutrients, toxic materials, and petroleum products.

POLLUTION PREVENTION MEASURES

1) Whenever possible, store containers (e.g. drums, bins, bags, cans, and totes) indoors or under cover to limit exposure to stormwater.
2) Designate specific areas for material delivery and storage that are away from heavy traffic areas, storm drains, stormwater conveyances, and areas of concentrated run-off.
3) Designated outdoor storage areas should be paved or consist of an impervious surface.
4) Provide secondary containment for materials whenever possible or required per regulation.
5) Store materials on pallets to prevent stormwater run-on from coming into contact with materials, prevent container corrosion, and allow for better leak detection. Pallets must be in good condition and promptly replaced once damaged or deteriorated.
6) Stack containers according to the manufacturer's recommendations to avoid damage.
7) Immediately replace damaged, corroded, or leaking containers.
8) Ensure all storage containers are clearly labeled with their contents.
9) Keep containers tightly sealed after use.
10) Maintain an accurate inventory of hazardous substances and limit on-site storage to that which is necessary to support facility operations.
11) Keep storage areas neat and well organized; remove debris and unneeded material promptly.
12) If empty drums are stored outdoors, ensure that all openings are equipped with caps to prevent water intrusion and that the drum/storage area is labeled "Empty Drums".
13) Have an adequate supply of appropriate spill response equipment readily available and clean up all spills and releases immediately utilizing dry cleaning techniques (e.g. sweeping/absorbents).
14) Clean up all migrating dry materials upon discovery and address the source of the release.
15) Provide perimeter controls (e.g., berms, rock check dams, etc.) for erodible stockpiles of materials such as mulch, sand, and gravel to prevent migration into the stormwater system.
16) Routinely inspect material storage areas for leaks, material migration, and damaged or corroded containers. Ensure that secondary containment and other perimeter controls are in satisfactory condition.
17) Additional visual inspections of outdoor storage areas should be conducted after significant rainfall events (i.e., greater than 0.5 inches).

BMP Fact Sheet

ABOVEGROUND STORAGE TANKS

GH-07

Not Applicable ☐ Applicable ☒

CONCERN

Aboveground storage tanks (ASTs) may be used to store fuels, automotive fluids, chemicals, or deicing fluids. Leaks from tanks, piping, or other equipment and releases during fluid transfers can all impact stormwater quality. It is critical to maintain ASTs in good working condition to prevent spills and/or releases from occurring. Improperly managed storage tanks can cause significant environmental impacts.

POLLUTION PREVENTION MEASURES

General *(applicable to all storage tanks)*

1) ASTs should be installed and maintained in accordance with COMAR 26.10 and applicable fire codes.
2) ASTs should be provided with secondary containment, whenever feasible or required by regulation.
3) Secondary containment areas shall be maintained clean and dry; drain valves must be kept closed; accumulated liquid shall only be discharged if there are no visible signs of impacts, and in accordance with applicable regulations.
4) Inspect ASTs monthly to identify any leaking or malfunctioning equipment and ensure tanks are functioning as designed.
5) ASTs shall be equipped with a form of liquid-level detection (i.e. sight gauge, electronic monitoring).
6) ASTs shall be equipped with overfill prevention (i.e. overfill alarm and/or overfill prevention valve).
7) Tanks and piping should be protected from vehicle impact via barriers, bollards, guard rails, etc.
8) Install ASTs on solid foundations over impervious surfaces, and away from areas of concentrated run-off, storm drains, and other stormwater conveyances.
9) Properly label all storage tanks (e.g., contents, capacity, etc.).
10) Keep remote fills and fill port spill buckets clean and dry.
11) Keep fill ports, gates, and tank areas secured when not in use to prevent fuel theft and tampering.
12) Have an adequate supply of appropriate spill response equipment readily available and clean up all spills and leaks immediately utilizing dry cleaning techniques (e.g. absorbents and brooms).
13) Facilities that maintain 1,320 gallons or more of aboveground oil products shall prepare and implement a Spill Prevention, Control, and Countermeasure (SPCC) Plan, per 40 CFR 112.
14) Facilities that maintain 1,000 gallons or more of used oil or 10,000 gallons or more of virgin oil in ASTs shall obtain an Individual Oil Operations Permit from the MDE, per COMAR 26.10.01.09.
15) Owners/Operators of facilities that maintain more than 2,500 gallons of oil in ASTs are required to register each AST with MDE, per COMAR 26.10.01.10.

Bulk Fluid Transfers (Deliveries)

1) All bulk fluid transfer operations shall be performed under the direct supervision of knowledgeable County personnel. At no time shall the delivery vehicle or delivery vehicle operator be unsupervised.
2) The product level within the tank must be measured and available capacity verified before delivery.
3) Deliveries shall be made via fill ports equipped with catch basins to capture drips and spills.
4) Ensure an adequate supply of appropriate spill response equipment is readily available.
5) Post signs in delivery area displaying proper delivery procedures and emergency contact information.

ABOVEGROUND STORAGE TANKS

Used Oil Tanks

1) County personnel must verify the level of product in used oil tanks prior to filling.
2) Used oil tanks should only be filled via designated fill ports. Pumping used oil into the tank via a closed piping system is preferred to manually pouring used oil into the tank.

Brine Tanks

1) If multiple tanks are located onsite, the tanks should be plumbed to ensure that the complete failure of one tank will not drain all the tanks in the system (tanks must be isolated).
2) Minimize seeping and leaking at fittings by properly supporting piping and fittings, using flexible connectors or hoses to reduce stress, and installing corrosion-resistant fittings.
3) Consider placing hoses in non-permeable trenches or using drip-less nozzles to reduce repeated small spills.

RESIDENT DROP-OFF CENTER

GH-08

Not Applicable ☒ Applicable ☐

CONCERN

Resident Drop-Off Centers are publicly accessible facilities where residents can drop off used automotive fluids (i.e. oil or antifreeze), municipal waste, recyclable, and/or organic waste, typically free of charge. Improper transfer or management of the waste materials can allow a number of pollutants including oils and greases, toxic and chemical compounds, nutrients, metals, and other wastes to enter waterways.

POLLUTION PREVENTION MEASURES

General *(applicable to all materials collected)*

1) Clearly identify waste materials accepted by the facility, and clearly mark designated collection areas.
2) Waste material should be inspected by a County representative, prior to disposal.
3) Avoid positioning waste receptacles near storm drains, water bodies, or areas of concentrated runoff.
4) When practical, receiving areas should be covered.
5) Do not allow containers to overflow or waste materials to accumulate on the ground.

Automotive Fluid Collection

1) Used oil, antifreeze, and automotive fluid receiving areas should be on impervious surfaces, covered, and provided with secondary containment, which shall be maintained clean and dry.
2) Provide lidded waste receptacles in the receiving area for the public to dispose of empty containers. Waste receptacles shall be emptied routinely and waste disposed of properly.
3) Collection areas shall be inspected daily and all trash and spilled liquids appropriately cleaned up.
4) The available capacity of waste liquid collection containers shall be routinely verified and waste removals scheduled, as needed.
5) Install appropriate controls to prohibit the overfilling of waste fluid collection containers.
6) Place appropriate spill response equipment in close proximity to drop-off areas.
7) If aboveground tanks are used to collect waste fluids, refer to BMP Fact Sheet GHP-07 (Aboveground Storage Tanks) for additional recommendations.

Organic Debris Collection

1) Routinely transfer collected organic debris/waste to a composting or disposal facility.
2) Do not permit composting of organic waste except at properly designed and permitted facilities.
3) Enact controls to prevent leaves and other windblown debris from entering stormwater inlets.

Municipal Waste / Recyclables Collection

1) Refer to BMP Fact Sheet GHP-01 (Waste Management) for additional recommendations.

BMP Fact Sheet

STOCKPILES

GH-09

Not Applicable ☒ Applicable ☐

CONCERN

The County may stockpile various erodible materials, the type of material can vary depending on the needs of the County. Stockpiled material may include soil, sand, millings, slag, cinders, sawdust, landscaping bark, compost, etc. Exposed stockpiles can easily erode due to wind or precipitation and contribute suspended solids to stormwater runoff.

POLLUTION PREVENTION MEASURES

1) Maintain stockpiles of erodible materials within roofed storage buildings or covered storage bins, if feasible. If not, stockpile material on an impervious surface and cover the stockpile.
2) Temporary stockpiles should be placed on an impermeable membrane (tarp) for quick clean-up.
3) Locate stockpiles away from drain inlets, catch basins, swales, areas of concentrated stormwater flow, water bodies, and environmentally sensitive areas.
4) Divert stormwater flows away from/around the stockpiles using a diversion device (e.g., temporary swale, berm, sandbags, or diversion fence).
5) Cover temporary stockpiles of erodible materials with a tarp that has been adequately secured. The covers must be in place at all times when the stockpile is not in active use.
6) When accessing a portion of the stockpile, only remove a section of the cover to minimize exposure to the elements.
7) Use barriers to isolate stockpiled materials from high-traffic areas to prevent tracking of materials.
8) Sweep (do not wash or hose down) in front of material stockpile storage areas at regular intervals, following loading and unloading activities, and during times of heavy use.
9) If material is observed migrating from the stockpile, clean up all migrated material upon discovery and provide additional controls to reduce migration from the stockpile. If such measures are ineffective implement controls to capture pollutants before they migrate off-site (e.g. silt fencing, inlet filters, filter socks, at-grade inlet protection, etc.).
10) Minimize material stockpile inventory based on historical inventory/usage records and public safety operational needs.
11) Cold mix asphalt shall be stored on and covered with plastic sheeting or comparable material.
12) Routinely inspect outdoor material stockpiles to verify existing controls are functioning properly and for signs of erosion or material transport.

BMP Fact Sheet

DEICING MATERIALS

GH-10

Not Applicable ☒ Applicable ☐

CONCERN

When salt and other de-icing materials are stored outside and uncovered, they have a much higher risk of being eroded and transported offsite by stormwater. Improper de-icing material and sand storage may result in stormwater runoff containing elevated concentrations of sodium chloride and dissolved solids. Sodium chloride (e.g., road salt) is an effective deicer but can be highly corrosive to stormwater facilities. Smaller waterways are at a higher risk to increases in salinity, which can threaten aquatic species. Additionally, runoff containing sodium chloride has the potential to reach drinking water sources where small traces can adversely impact public health.

POLLUTION PREVENTION MEASURES

1) Bagged de-icing chemicals must be stored indoors. If stored outdoors bags must be kept on pallets (off the ground) and covered at all times. Bags must be intact without holes or openings.
2) Bulk de-icing materials shall be stored under cover and on an impervious surface.
3) Bulk salt storage areas/buildings shall not be overfilled so that salt spills out beyond the entrance of the storage area/building.
4) Bulk salt storage areas/buildings shall be maintained in a structurally sound condition and in a way that prevents the release of salt and the infiltration of stormwater. Deicing materials should not touch the sides of metal storage containers.
5) Barriers such as berms, gates, knee walls, tarps, and/or straw bales shall be placed at the entrances of bulk salt storage areas/buildings to prohibit the migration of salt and prevent contact with precipitation/stormwater runoff.
6) Routinely inspect storage areas for migrating materials or deterioration of containment structures. Sweep up all migrating materials upon discovery and repair the source of the migrating pollutant.
7) Loading areas should be constructed of impervious material and covered or enclosed, to the extent practical, to reduce potential contact with stormwater.
8) Minimize the distance de-icing materials are transported during loading/unloading activities.
9) Prevent and/or minimize the spillage of salt and de-icing materials during loading/unloading activities, immediately clean spilled or tracked materials.
10) Sweeping of storage and loading/unloading areas shall be conducted immediately following loading/unloading activities.
11) Do not store de-icing materials (bulk or bagged) over or immediately adjacent to drains or waterways.
12) Control site drainage by diverting stormwater run-on away from storage/loading areas using appropriate measures (e.g., curbing, berms, etc.).
13) Slope storage/loading areas to direct salt-contaminated runoff to an appropriate collection area, and in a manner that prevents the runoff from reaching adjacent soil or surface waters.
14) Excess salt shall be removed from salt handling equipment (trucks, spreaders, etc.) following use/prior to storage. All cleaning shall occur on an impervious surface, which is sloped or curbed to contain any washwater and direct it to a collection area for recycling or proper disposal.

Appendix A

GHP Site Inspection Checklist

GOOD HOUSEKEEPING PLAN (GHP)
SITE INSPECTION CHECKLIST

Facility Name: _____ **Inspection Date:** _____

Inspector Name: _____ **Inspector Signature:** _____

- The intent of this inspection is to ensure that the site is being properly maintained and that there are no visible signs of pollutants entering the stormwater system.
- **A shaded status box designates an item in a non-compliant status. Please provide an explanation for all non-compliant items and subsequently document all corrective actions performed.**
- Retain the completed checklists for five (5) years.

Item	Status			CORRECTIVE ACTIONS/COMMENTS *Items which cannot be corrected immediately must be reported to the GHP/NPDES Program Manager*
	Yes	No	N/A	
GENERAL HOUSEKEEPING				
1. Are exterior areas of the facility free of accumulated trash, debris, and unneeded materials?				
2. Are stormwater drains and inlets free from debris, sediment, and evidence of spills/releases?				
3. Is the facility free from signs of erosion?				
4. Are paved surfaces free of accumulated sediment?				
5. Is spill response equipment available in maintenance areas, fueling areas, hazardous material storage areas, and/or other required areas?				
6. Are spill kits and absorbent materials clearly labeled and accessible (i.e. items are not piled on top of or in front of spill kits)?				
7. Are spill kits secured from being stolen or misused?				
8. Is there a labeled container present for the disposal of used spill cleanup material?				

GOOD HOUSEKEEPING PLAN (GHP)
SITE INSPECTION CHECKLIST

Item	Status			CORRECTIVE ACTIONS/COMMENTS *Items which cannot be corrected immediately must be reported to the GHP/NPDES Program Manager*
	Yes	No	N/A	
9. Does spill response equipment (i.e. spill kits, absorbent materials) need to be replenished?				
WASTE MANAGEMENT				
10. Are areas around solid waste containers/roll-offs/compactors free of excessive trash accumulation or overflowing containers?				
11. Are areas around solid waste containers/roll-offs/compactors free of visible evidence (i.e. leaks, staining) of ongoing stormwater pollution?				
12. Are scrap metal containers in good order and free from evidence of leaking oil/grease?				
13. For dumpsters, roll-offs, and other waste receptacles, where leaks are observed, have appropriate controls (e.g. containment, spill response, etc.) been enacted?				
14. Are the lids (if present) to solid waste containers closed?				
15. Is street sweeping/vactor waste being managed appropriately (i.e. no evidence of material migration)?				
16. Is waste cooking grease managed appropriately (i.e. no evidence of spilled material or excessive staining)?				
VEHICLE & EQUIPMENT STORAGE				
17. Are stored vehicles/equipment free from leaks?				
18. If leaks are present, are they being managed appropriately (drip pan or other methods in place to capture released liquids)?				
19. Are storage areas free of visible evidence of chronic leaks/spills (i.e. significant staining)?				

GOOD HOUSEKEEPING PLAN (GHP)
SITE INSPECTION CHECKLIST

Item	Status			CORRECTIVE ACTIONS/COMMENTS *Items which cannot be corrected immediately must be reported to the GHP/NPDES Program Manager*
	Yes	No	N/A	
VEHICLE & EQUIPMENT REFUELING				
20. Are the areas around refueling areas free from evidence of spills or leaks?				
21. Are refueling areas free of used absorbent material that has not been swept/cleaned up?				
22. Do fuel dispensers and hoses appear to be in good working order and well-maintained?				
VEHICLE MAINTENANCE				
23. Is there any indication that vehicle maintenance activities are being conducted outdoors?				
24. Is there any indication that vehicle maintenance activities are contributing to stormwater pollution?				
VEHICLE & EQUIPMENT WASHING				
25. If performed on-site, does all vehicle/equipment washing occur indoors?				
26. Is wash water collected and disposed of properly?				
27. Is there any indication that vehicle/equipment wash water is being released to stormwater conveyances or pervious areas?				
MATERIAL STORAGE				
28. Are all outdoor storage areas free from visible signs of leaks or spilled material?				
29. Are material storage containers in good condition?				

GOOD HOUSEKEEPING PLAN (GHP)
SITE INSPECTION CHECKLIST

Item	Status			CORRECTIVE ACTIONS/COMMENTS *Items which cannot be corrected immediately must be reported to the GHP/NPDES Program Manager*
	Yes	No	N/A	
30. Are drums, totes, and other containers (that are <u>not</u> empty) stored off the ground and covered, or stored indoors?				
31. Are liquid-containing drums/totes located outdoors provided with secondary containment?				
32. Are containers that are located outdoors equipped with closed lids except when material transfers are occurring?				
33. Are materials, which could impact stormwater, stored away from heavy traffic areas, or protected from vehicle collisions?				
34. Are chemical storage containers properly labeled?				
35. If empty drums are stored outside, are all openings equipped with caps to prevent water intrusion?				
ABOVEGROUND STORAGE TANKS				
36. Are all storage tanks, and surrounding areas free from visible signs of leaks or spilled material?				
37. Do storage tanks appear to be in good working order (e.g. free of obvious signs of damage or malfunctioning equipment)?				
38. Are remote fills associated with tanks free of liquid and debris?				
RESIDENT DROP-OFF CENTERS				
39. Are waste collection areas clearly identified?				
40. Are used oil/antifreeze collection tanks, containment structures, and surrounding areas free from visible signs of leaks or spilled material?				

GOOD HOUSEKEEPING PLAN (GHP)
SITE INSPECTION CHECKLIST

Item	Status			CORRECTIVE ACTIONS/COMMENTS *Items which cannot be corrected immediately must be reported to the GHP/NPDES Program Manager*
	Yes	No	N/A	
41. Do used oil/antifreeze collection tanks appear to be in good working order (e.g. free of obvious signs of damage or malfunctioning equipment)?				
42. Are empty used oil/antifreeze containers being collected and disposed of in the trash?				
43. Are areas around waste/recyclables containers free of excessive trash accumulation or overflowing containers?				
44. Are areas around waste/recyclables containers free of visible evidence (i.e. leaks, staining) of ongoing stormwater pollution?				
45. Are organic debris collection areas free of visible evidence of ongoing stormwater pollution (e.g. leaves and debris in stormwater conveyances)?				
STOCKPILES				
46. Are material piles, including salt, soil, sand, and millings isolated (i.e. covered, bermed, etc.) to prevent stormwater run-on and run-off?				
47. Are areas surrounding material piles (e.g. salt, soil, sand, millings, etc.) free of tracked or migrated material?				
DEICING MATERIALS				
48. Are all deicing materials stored indoors or undercover?				
49. Are salt storage structures in good condition (e.g. no evidence of material escaping or stormwater infiltration)?				
50. Is the salt loading area clean?				

GOOD HOUSEKEEPING PLAN (GHP)
SITE INSPECTION CHECKLIST

Item	Status			CORRECTIVE ACTIONS/COMMENTS *Items which cannot be corrected immediately must be reported to the GHP/NPDES Program Manager*
	Yes	No	N/A	
51. If deicing materials are tarped, is the tarp secure and covering the entire pile?				
52. Are bags of salt stored indoors, or off the ground and covered?				

ADDITIONAL COMMENTS:

Appendix B

GHP Stormwater Conveyance System Inspection Checklist

GOOD HOUSEKEEPING PLAN (GHP)
STORMWATER CONVEYANCE SYSTEM INSPECTION CHECKLIST

Facility Name: _____ **Inspection Date:** _____

Inspector Name: _____ **Inspector Signature:** _____

- The intent of this inspection is to ensure the free flow of stormwater within on-site conveyance systems and prevent damage/flooding.
- **If maintenance is needed, please provide an explanation, and document all corrective actions performed.**
- **Inspections shall include visually accessible infrastructure only; at no time shall inspection personnel enter a confined space.**
- Retain the completed checklists for five (5) years.

Item	Item Checked (Y/N/NA)	Maintenance Needed (Y/N)	CORRECTIVE ACTIONS/COMMENTS *Items which cannot be corrected immediately must be reported to the GHP/NPDES Program Manager*
CATCH BASINS / INLETS			
1. Look for debris and sediment blocking catch basin grates. If found, remove.			
2. Look for damage or cracks to the frame, grate, basin walls or bottom. If found, schedule repairs or replacement.			
3. Look for sediment and debris in the catch basin sump. If sediment fills 60% of the sump or comes within 6” of a pipe it should be scheduled for cleaning.			
4. If any type of filtering device is present, verify that the filter is not clogged, torn, or damaged; clean if clogged, replace if damaged.			
PIPES / CULVERTS			
5. Look for evidence of clogged piping (e.g. visual obstructions, standing water within manholes/inlets structures, etc.). If found, remove or schedule cleaning.			
6. Verify vegetation growth, if present, does not impede water flow. If it does, mow, cut back, or remove.			

GOOD HOUSEKEEPING PLAN (GHP)
STORMWATER CONVEYANCE SYSTEM INSPECTION CHECKLIST

Item	Item Checked (Y/N/NA)	Maintenance Needed (Y/N)	CORRECTIVE ACTIONS/COMMENTS *Items which cannot be corrected immediately must be reported to the GHP/NPDES Program Manager*
7. Inspect for damaged piping, inlets, outlets, headwalls, wingwalls, or excessive erosion. If found, make or schedule repairs.			
DITCHES / TRAPEZOIDAL SWALES			
8. Check for erosion, slumping, or undercutting. If found, make or schedule repairs.			
9. Look for trash and sediment accumulation. Remove all trash and remove sediment if it will impede water flow or clog downstream structures.			
10. Verify vegetation growth does not impede water flow. If it does, mow, cut back, or remove. Remove any trees or shrubs growing within the ditch.			
11. Check the integrity of check dams, filter socks, or other flow dissipation/filtering devices within the ditch or swale. Perform or schedule service if they are clogged, damaged, or deteriorated.			
12. Check inlets and outlets for debris accumulation, damage, or erosion. If found, make or schedule repairs.			

ADDITIONAL COMMENTS:

GUIDANCE DOCUMENT
GOOD HOUSEKEEPING PLAN - STORMWATER CONVEYANCE INSPECTIONS

INTRODUCTION

Maintaining catch basins, stormwater inlets, and other stormwater conveyance structures on a regular basis will remove pollutants, prevent backups, and ensure the system functions as intended to avoid flooding.

Each GHP-covered facility is required to conduct routine stormwater conveyance system inspections to ensure the free flow of stormwater within the conveyance system(s). The GHP includes a *"GHP Stormwater Conveyance System Inspection Checklist"*, to be used when completing the required inspections. This document provides additional background and guidance to aid facility personnel in completing the inspections.

CATCH BASINS / INLETS

Catch basins and inlets are all points for stormwater to enter storm drain systems. These structures are typically part of a larger conveyance system with many interconnected components where the impairment of one component can compromise the functionality of the larger system. Inlets and catch basins are subject to functional impairment by a variety of conditions, including:

- Structural damage including from vehicles and plows
- Cracks/joint separation at piping (inlet and outlet) connections
- Leaking due to cracks and joint separation
- Missing or damaged grates and grate frames
- Corrosion
- Blockage caused by debris, sediment, vegetation, or other objects

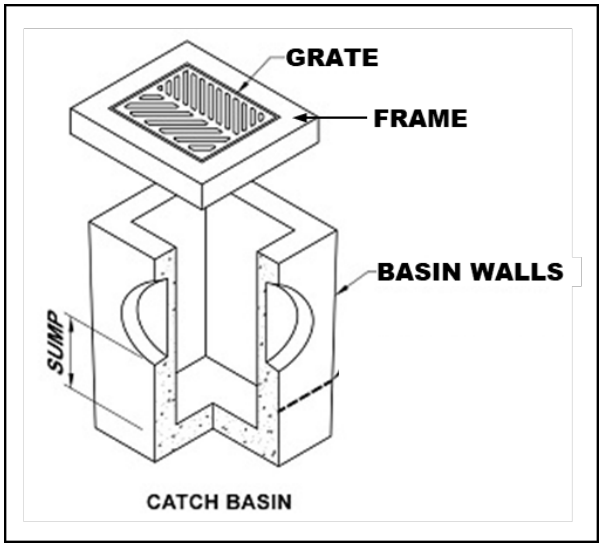

Figure 1 – Catch Basin Diagram

The following photos provide additional information related to the various inspection items, including examples of typical issues that may be encountered. The photo numbers correspond to the inspection checklist item number.

Inspection Item #1 [1]



Debris and sediment blocking inlet/catch basin grate.

Inspection Item #2 [2]



Damaged Grate

Inspection Item #2 [3]



Damaged Frame

Inspection Item #2 [4]



Failing brick walls with a stormwater inlet.

Inspection Item #2 [5]



Failing asphalt surrounding the inlet

[1] Grand Valley State University - https://www.gvsu.edu/groundswell/clogged-storm-drains-71.htm
[2] Georgia Department of Transportation – Stormwater System Inspection and Maintenance Manual, March 2020
[3] https://catchbasinauthority.ca/catch-basin-101/
[4] https://www.fixasphalt.com/catch-basin-repairs
[5] https://ccpia.org/catch-basin-and-manhole-inspections/

Inspection Item #3 [6]



Sediment and debris inside stormwater inlet

Inspection Item #3

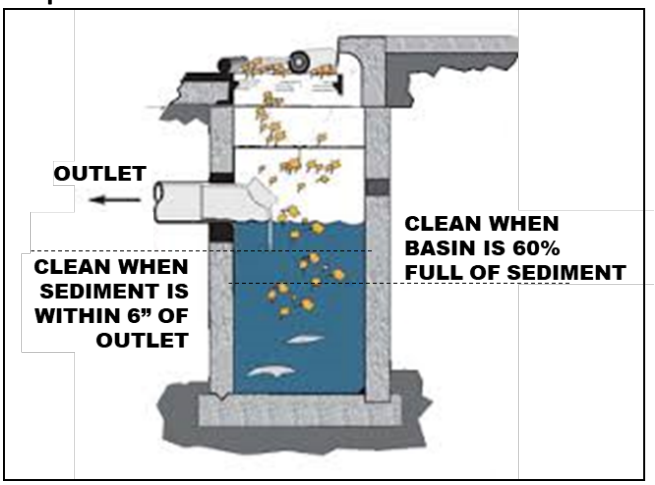

Remove sediment from a catch basin if it fills 60% of the sump or comes within 6" of a pipe.

Inspection Item #4 [7]



Example of inlet filter. Replace when filled or damaged.

Inspection Item #4 [8]



Example of an inlet filter sock, replace if damaged.

PIPES AND CULVERTS

Pipe systems are designed to convey stormwater runoff safely and effectively from inlets to various discharge points and outfalls. A culvert is a structure that channels water under an obstacle such as a roadway or railroad. These structures are subject to functional impairment by a variety of conditions, including:

- Blockage or obstruction due to build up of vegetation, debris, sediment, or other objects
- Cracks and/or joint separation
- Collapsed pipe
- Corrosion
- Root intrusion
- Lack of stabilization

[6] https://www.fixasphalt.com/catch-basin-repairs
[7] https://store.interstateproducts.com/products/Ultra-Drain-Guards/Ultra-Drain-Guard-Adjustable-Frame-Model
[8] https://www.newpig.com/pig-sediment-filter-sock/p/FLT787

Inspection Item #5 [9]



A pipe filled with sediment, inhibiting flow.

Inspection Item #5 [10]



Standing water around an inlet may indicate a blockage.

Inspection Item #6 [11]



Pipe conveyance filled with vegetation.

Inspection Item #7 [12]

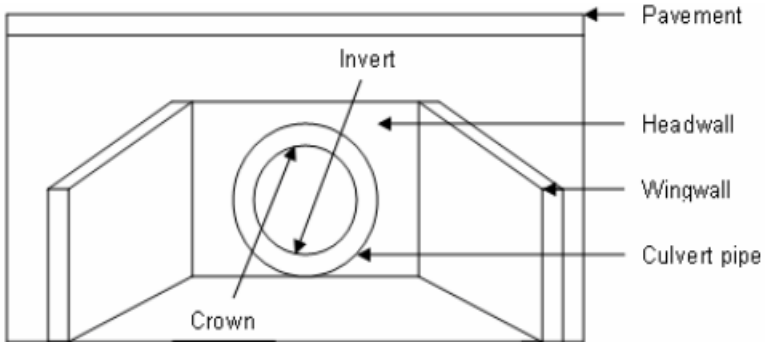

Diagram depicting various components of a culvert.

[9] Georgia Department of Transportation – Stormwater System Inspection and Maintenance Manual, March 2020
[10] https://www3.epa.gov/region9/water/npdes/stormwater-feature.html
[11] Georgia Department of Transportation – Stormwater System Inspection and Maintenance Manual, March 2020
[12] https://www.researchgate.net/figure/Components-of-a-Culvert_fig34_228685906

Inspection Item #7 [13]



A crack is the culvert headwall.

Inspection Item #7 [14]



Evidence of erosion around a culvert.

DITCHES AND SWALES

Ditches and swales serve similar functions. Both are used to convey stormwater. However, there are slight differences. A ditch is a narrow channel typically found along roads and at the edges of parking lots/driveways. A swale is like a ditch, but it is broad and shallow, and usually covered or lined with turfgrass or stone. Issues associated with these structures, which could impede their function include:

- Blockage or obstruction due to vegetation, debris, sediment, or other objects
- Erosion
- Rapidly moving water
- Lack of adequate vegetative cover for grass-lined channels

Inspection Item #8 [15]



Erosion and slumping within a drainage ditch.

Inspection Item #8 [16]



Slumping within a drainage swale.

[13] https://www.sbt-durabi.org/articles/xml/ARN0/
[14] https://lufkindailynews.com/news/local/culverts-crumbling-in-precinct-1/article_a9fed902-4379-5248-ab11-7471e2974298.html
[15] https://graniteseed.com/blog/how-to-stop-a-ditch-from-eroding/
[16] https://www.mnwcd.org/erosion-control

Inspection Item #9 [17]



Litter and debris within a ditch.

Inspection Item #9 [18]



Litter and debris within a swale.

Inspection Item #10 [19]



Cracks and joint separation in concrete channels, removal of vegetation may prevent future damage.

Inspection Item #11 [20]



Rock check dam across a channel.

Inspection Item #11 [21]



Filter sock check dams across a grass swale.

[17] https://craven.ces.ncsu.edu/2023/02/for-those-who-love-to-litter/
[18] https://www.cityoftulsa.org/government/departments/public-works/stormwater-quality/adopt-a-stream/
[19] Georgia Department of Transportation – Stormwater System Inspection and Maintenance Manual, March 2020
[20] EPA Stormwater Best Management Practice, Check Dams, December 2021
[21] EPA Stormwater Best Management Practice, Check Dams, December 2021

Inspection Item #12 [22]



Inlet to a rock-lined swale.

Inspection Item #12 [23]



Sediment accumulation at swale inlet.

END OF DOCUMENT

[22] https://www.stormwater.com/erosion-control/vegetation-management/article/13016118/inlet-protection-during-constructionand-after

[23] https://www.stormwater.com/erosion-control/vegetation-management/article/13016118/inlet-protection-during-constructionand-after

Appendix C

General Spill Response Procedures

SPILL RESPONSE AND NOTIFICATION PROCEDURES

A. Discovery of a Spill

1. Upon discovery of a spill, facility personnel should immediately assess the situation and determine if the spill is considered a "Minor" or "Major" spill. For a spill to be considered "Minor" all the following conditions must be satisfied:

    - ❖ The type of material spilled is known;
    - ❖ The spill is confined to the immediate work area;
    - ❖ The spill has not reached storm drains, sanitary sewer systems, open water, or surrounding soils;
    - ❖ The spill can be safely managed;
    - ❖ The employee can contain and clean up the spill with the PPE that is normally used in the work area;
    - ❖ The spill does not pose a serious threat of fire or an explosion; and
    - ❖ The spill does not pose conditions that are immediately dangerous to life or health.

2. If all the above conditions are met, the spill is considered "Minor". Refer to ***Section B*** of this document for appropriate response actions.

3. If all the above conditions are not met, then the spill is considered "Major". Refer to ***Section C*** of this document for appropriate response actions.

4. If a spill involves flammable liquids, ignitable vapors may be present - precautions must be taken to prevent ignition. Do not turn on or off equipment since sparks may be generated. Additionally, avoid the movement of equipment that could create static electricity. Larger spills of flammable liquids could pose a fire threat and would be considered a "Major" spill. Refer to ***Section C*** for appropriate actions.

B. Response to a "Minor" Spill

1. Identify the source of the spill and the direction in which the spill is heading.

2. Attempt to stop the spill at the source. Where applicable, the source of the spill shall be taken out of service until repairs can be made. If the spill is related to a fuel dispensing system, activate the Emergency Shut-Off (ESO) switch to prevent additional fuel disbursements.

3. If material is released outside a containment area, it is crucial that the material be contained as quickly as possible. Following proper safety procedures, use absorbent materials or diking to contain the spill. Prevent the spill from reaching storm drains, sanitary sewers, or open water. If a spill is flowing toward a drain, install temporary diking around the drain, block off the drain with a drain cover, or place absorbent material around the drain to prevent a discharge.

4. Once the spill has been stopped and contained, estimate the quantity of the spill. Consult applicable Safety Data Sheet (SDS) for material compatibility and environmental precautions. Note and follow recommendations regarding special precautions, spill response equipment, methods, or precautions. All cleanup work shall be conducted in accordance with existing safety protocols and SDS recommendations. Contact the facility Superintendent/Supervisor, or designee, for assistance if needed.

5. Recover or clean up the spilled material as much as possible. Material that cannot be reused must be discarded in accordance with state and federal regulations. Liquids absorbed by porous materials (e.g., wood, gravel, significant quantities of absorbent material, etc.) shall be placed into US DOT-approved 30-gallon or 55-gallon steel drums. Following cleanup, the container shall be secured and appropriately labeled to identify the contents and the date of the spill/cleanup. Containers shall be stored indoors and provided with secondary containment until transported off-site for disposal.

6. For spills that do not involve flammable liquids or other potential hazardous wastes, small quantities of used absorbent materials may be double bagged and disposed of along with municipal trash as long as all liquids have been absorbed (no free liquid may be present).

7. If the spilled material is a flammable liquid, corrosive liquid (pH ≤ 2 or ≥ 12.5), or other potential hazardous waste, all recovered product, impacted material, and used absorbent must be placed into a US DOT-approved containers/drums. Following cleanup, the container(s) shall be secured and appropriately labeled to identify the contents and the date of the spill/cleanup. Containers shall be stored indoors and provided with secondary containment until transported off-site for disposal. The facility Superintendent/ Supervisor, or designee shall be notified that a potential hazardous waste was released and that a waste characterization may be needed to facilitate proper disposal.

8. Surfaces that are contaminated by the spill shall be cleaned utilizing dry absorbent material. Tools and equipment that have been used in the cleanup must be decontaminated immediately after use. Decontamination water (if used) must be minimized, containerized, and disposed of properly.

9. If waste requires disposal, notify the facility Superintendent/Supervisor, or designee who will arrange for the proper characterization and disposal of any waste material. Representative sampling and analysis may be necessary to properly characterize the waste. The waste must be transported and disposed of in compliance with all applicable laws and regulations. Waste manifests, trip tickets, or bills of lading (if required) for waste disposal shall be kept on file.

10. Facility personnel shall restock/replace spill response equipment and absorbent materials used during the clean-up efforts.

11. The facility Superintendent/Supervisor, designee, or other appropriate County personnel shall be notified of the spill in accordance with ***Section D*** of this document.

C. Response to "Major" Spill

A "Major" spill is any discharge that does not meet the definition of a "Minor" spill. Any employee or contractor observing, being involved with, or recognizing a potential or actual spill of oil or other hazardous material, other than a "Minor" spill is responsible for performing the following actions:

1. If there is no danger to human health, attempt to stop and contain the spill at the source. If the spilled material is unknown, if PPE other than that which is typically used in your work area, is necessary to approach the spill area, or if assistance is required to stop the spill, do not attempt to contain the spill. If the spill is related to a fuel dispensing system, activate the Emergency Shut-Off (ESO) switch.

2. Most County employees lack the appropriate training to respond to "Major" spills. If the spill is of an unknown substance, is of a quantity that cannot be safely managed, or poses other risks beyond the training level of the employee, the employee should not attempt to contain or clean up the spill.

3. Evacuate individuals from the area and keep personnel away from the impacted area.

4. Immediately notify the facility Superintendent/Supervisor, or designee of the incident. The notified individual will determine the need for further evacuations and contact emergency response personnel (911), as necessary. *If a situation represents an immediate and grave danger to personnel, the public, structures, or other infrastructure, the individual discovering the incident may call 911 directly without first notifying facility management.*

5. The facility Superintendent/Supervisor or designee will determine if assistance from emergency response contractors is required to clean up the incident and will coordinate such spill response efforts with spill response contractors and other County agencies and first responders.

6. Facility personnel will provide assistance to emergency responders, as appropriate.

D. Reporting a Spill (Internal Notifications)

1. Once a spill is contained and cleanup operations have been initiated, the individual discovering the spill shall notify the appropriate County representatives and provide the following information:

    a) Identify the location, date, and time of the incident;
    b) Identify the type of material spilled or discharged;
    c) Estimate the quantity spilled and the rate of the spill;
    d) Identify the cause of the spill or discharge;
    e) Identify impacted media or infrastructure (soil, storm drains, open water bodies, etc.);
    f) Determine the extent of injuries involved; and
    g) Provide response measures implemented by the facility personnel.

E. Reporting a Spill (Regulatory Notifications)

State of Maryland Reporting Requirements (COMAR 26.10.01.05)

1. Upon discovery of a spill, the Responsible Person shall notify the MDE Emergency Response Division **within two (2) hours** by calling 866-633-4686. The caller shall be prepared to provide the following information:

    a) The time and date of the spill;
    b) The location and cause of the spill;
    c) The mode of transportation or type of facility involved;
    d) Type and quantity of oil spilled;
    e) Details regarding any assistance required;
    f) The name, address, and telephone number of the person making the report; and
    g) Any other pertinent information requested by the Department.

2. MDE will provide further guidance on additional responsibilities.

3. Within **ten (10) working days** of the completed removal and clean-up activities, the Responsible Person shall prepare a report using either County letterhead detailing the incident. The report shall contain the following:

    a) Date, time, and place of the spill;
    b) The amount and type of oil or hazardous substance spilled;
    c) A complete description of circumstances that contributed to the spill;
    d) A complete description of the containment and removal operations performed, including disposal sites to which oil refuse was transported;
    e) Procedures, methods, and precautions instituted to prevent the recurrence of an oil spill from the facility involved;
    f) Any other information considered necessary or required by the MDE for a complete description of the incident; and
    g) A certification that the information provided is true and correct to the knowledge of the person signing the report.

4. The completed report shall be submitted to mdeerd.mema@maryland.gov or faxed to 410-537-3932.

5. A digital copy of the completed report and any accompanying documentation shall be retained

Federal Reporting Requirements - National Response Center (40 CFR 110)

1. If any of the following criteria are met the Responsible Person shall notify the National Response Center (NRC) **within two (2) hours** of the spill discovery by calling 800-424-8802 or 202-426-2675.

    - ❖ The spill has caused a film, sheen, or discoloration of the surface water or shorelines;
    - ❖ The material spilled will violate applicable water quality standards (surface water or groundwater); or
    - ❖ The spill has caused a sludge or emulsion to be deposited beneath the surface of the water or on the shoreline.

2. At a minimum, the following information shall be provided to the NRC:

    a) Name, organization, and telephone number of reporting party;
    b) Name and address of the responsible party;
    c) Date, time, and location of the incident;
    d) Source and cause of the discharge;
    e) Type of material(s) discharged;
    f) Quantity of materials discharged;
    g) Danger or threat posed by discharge;
    h) Number and types of injuries (if any);
    i) Weather conditions at the incident location; and
    j) Other information to help emergency personnel respond to the incident.

3. If unable to report to the NRC, reports can be made to the EPA Regional Office at 800-438-2474 or the U.S. Coast Guard (USCG) at 202-372-1001. The NRC, EPA, or USCG will provide further guidance.

4. A digital record of the NRC notification and any accompanying documentation shall be retained on-site.

Federal Reporting Requirements - EPA Regional Administrator (40 CFR 112.4)

1. If the facility where the spill occurred is regulated under 40 CFR 112 and is required to have a Spill Prevention, Control, and Countermeasures (SPCC) Plan, the Responsible Person shall report the spill to the EPA Region III Administrator when any of the following criteria are met:

   - More than 1,000 gallons of oil is discharged to navigable waters or adjoining shorelines in a single incident; or
   - More than 42 gallons of oil is discharged to navigable waters or adjoining shorelines in each of two incidents occurring within any twelve-month period.

2. The report shall be made in writing **within 60 days** of the spill and shall contain:

   a) Name and location of the facility;
   b) Owner/operator name;
   c) Maximum storage/handling capacity of the facility and normal daily throughput;
   d) Corrective actions and countermeasures taken;
   e) Adequate description of the facility including maps, and flow diagrams;
   f) Cause of the discharge to navigable waters, including a failure analysis;
   g) Additional preventative measures taken or planned to minimize discharge reoccurrence; and
   h) Other information required by the EPA Regional III Administrator.

3. The report shall be submitted to the EPA Regional Administrator at the following address:

   EPA Regional Administrator
   US EPA Region 3
   1650 Arch Street (3RA00)
   Philadelphia, PA 19103-2029

4. A copy of the report shall be retained in the facility SPCC Plan.

Appendix D

Training Records

GOOD HOUSEKEEPING PLAN (GHP)
TRAINING ATTENDANCE LOG

FACILITY NAME: _____

DATE	NAME *(PRINT)*	SIGNATURE

By signing I affirm that I have completed the required annual training; and I am aware of and understand my responsibilities under this Plan.

GOOD HOUSEKEEPING PLAN (GHP)

Joppatowne Wastewater Treatment Plant
101 Shore Drive
Joppatowne, MD 21085

June 30, 2025

TABLE OF CONTENTS

1.0 BACKGROUND & INTRODUCTION 1
1.1 Objectives 1
1.2 Potential Stormwater Pollutants 1
2.0 RESPONSIBILITIES 3
2.1 GHP Implementation 3
2.2 Plan Review and Modification 3
2.3 Inspections 3
2.3.1 GHP Site Inspections 3
2.3.2 Conveyance System Inspections 4
2.4 Training 4
3.0 BEST MANAGEMENT PRACTICES (BMPs) 5
3.1 Applicability of BMP Fact Sheets 5
3.2 BMP Fact Sheets 5

List of Tables

TABLE 1-1 POTENTIAL STORMWATER POLLUTANTS AND THEIR SOURCES 2

List of BMP Fact Sheets

GH-01 - Waste Management
GH-02 - Vehicle and Equipment Storage
GH-03 - Vehicle/Equipment Refueling
GH-04 - Vehicle Maintenance
GH-05 - Vehicle/Equipment Washing
GH-06 - Material Storage
GH-07 - Aboveground Storage Tanks
GH-08 - Resident Drop-Off Centers
GH-09 - Stockpiles
GH-10 - Deicing Materials

Appendices

Appendix A: GHP Site Inspection Checklist
Appendix B: GHP Stormwater Conveyance Inspection Checklist
Appendix C: General Spill Response Procedures
Appendix D: Training Records

List of Acronyms

AST	-	Aboveground Storage Tank
BMP	-	Best Management Practice
CFR	-	Code of Federal Regulations
GHP	-	Good Housekeeping Plan
MDE	-	Maryland Department of the Environment
MS4	-	Municipal Separate Storm Sewer System
NPDES	-	National Pollutant Discharge Elimination System
SPCC	-	Spill Prevention, Control, and Countermeasure Plan

1.0 BACKGROUND & INTRODUCTION

Polluted stormwater runoff has the potential to enter the County's storm sewer systems (referred to as a municipal separate storm sewer system or MS4), and then discharge, untreated, into local water bodies. To address this potential stormwater pollution, the County is required to obtain a NPDES permit from the Maryland Department of the Environment (MDE). The NPDES Permit requires the County to take actions to prevent stormwater pollution, maintain storm sewer systems, monitor stormwater discharges, and develop and implement comprehensive management programs to minimize the discharge of pollutants from the storm sewer system.

To comply with Part IV.D.4.b of the County's Phase I MS4 Permit, the County must develop, implement, and maintain a Good Housekeeping Plan (GHP) for certain County-owned properties not required to be covered under Maryland's General Permit for Discharges from Stormwater Associated with Industrial Activities *(General Permit 12-SWA / 20-SW).*

To support this effort, a *"Good Housekeeping Plan Applicability Certification"* has been developed to evaluate and document if a specific County-owned facility is subject to the GHP requirements. The *"GHP Applicability Certification"* includes the following ten (10) potential stormwater polluting activities. If any of the covered activities are performed at the facility, then that facility is required to implement a site-specific GHP. The GHP will include each of the potential stormwater polluting activities identified in the *"GHP Applicability Certification"* and corresponding pollution prevention procedures.

- Waste Management
- Vehicle and Equipment Storage
- Vehicle/Equipment Refueling
- Vehicle Maintenance
- Vehicle/Equipment Washing
- Material Storage
- Aboveground Storage Tanks
- Resident Drop-Off Center
- Stockpiles
- Deicing Materials

1.1 Objectives

The GHP was developed to outline suitable practices, procedures, and protocols, or Best Management Practices ("BMPs") for reducing and/or preventing stormwater pollution associated with operations at covered County-owned properties. The intent of the pollution prevention procedures included in the GHP is to limit the release of materials with the potential to impact stormwater, this includes reducing or eliminating (to the extent practical):

- The occurrence of spills and leaks;
- The accidental dumping or release of materials;
- The accumulation of waste, trash, debris, unused parts/equipment, etc.;
- The exposure of hazardous materials to precipitation/run-off;
- Stormwater run-off contamination by improperly stored materials; and/or
- Illicit discharges to the storm drain system.

1.2 Potential Stormwater Pollutants

Table 1-1 on the following page provides a list of common potential pollutants that may result from the GHP-regulated activities identified above. Understanding the sources of these pollutants can help in achieving the goals and objectives of the GHP program.

TABLE 1-1 POTENTIAL STORMWATER POLLUTANTS AND THEIR SOURCES

		Waste Management	Vehicle/Equipment Storage	Vehicle/Equipment Refueling	Vehicle Maintenance	Vehicle/Equipment Washing	Material Storage	Aboveground Storage Tanks	Resident Drop-Off Center	Stockpiles	Deicing Materials
Pollutants	**Sources**	**Associated GHP Activity**									
Sediment	Land disturbance; erosion; paved surfaces; material stockpiles; waste storage; salt/abrasive application	X				X	X		X	X	X
Hydrocarbons *(petroleum compounds)*	Leaking vehicle and equipment; vehicle and equipment cleaning; spills; improper storage; maintenance activities; scrap metal disposal; improper disposal	X	X	X	X	X	X	X	X		
Metals	Vehicle brake and tire wear; vehicle/equipment exhaust; batteries; galvanized metal; paint and wood preservatives; fuels, pesticides, and cleaners; vehicle fueling, maintenance, and washing; industrial waste	X	X	X	X	X	X	X	X		
Toxic Chemicals	Pesticide application; improper chemical storage; leaks and spills from storage containers; leaking vehicles; maintenance activities	X	X		X	X	X	X	X		
Chlorides	De-Icing chemicals										X
Trash/Debris	Improper waste storage and disposal; leaking trash containers; littering; poor housekeeping	X	X				X		X		
Nutrients (nitrogen and Phosphorus)	Fertilizers; malfunctioning septic systems; sewer overflows; animal/pet waste; vehicle washing; decaying grass and leaves; leaking trash containers; atmospheric deposition	X				X	X		X		

2.0 RESPONSIBILITIES

2.1 GHP Implementation

A separate GHP is required for each covered facility. The following individual *(identified by name and/or title)* is accountable for the administration and implementation of the GHP at this facility and has the authority to commit the necessary resources to implement this Plan.

_____

Name and/or Title of Responsible Person

The Responsible Person listed above shall ensure that facility personnel involved in any GHP-covered activities identified in this Plan, are provided with access to, and are familiar with, the contents of this Plan.

2.2 Plan Review and Modification

The *"GHP Applicability Certification"* completed for this facility must be reviewed and updated once every permit term, or within one (1) year of substantial changes to a facility's operations that could reasonably contribute to stormwater pollution. Any newly constructed/acquired facility must be assessed within one (1) year of initiating operations at the facility. The facility's GHP must be amended and reissued to the facility within one (1) year of any changes to the facility's *"GHP Applicability Certification"*.

When warranted, the BMP Fact Sheets provided in Section 3.0 may need to be updated or revised. At the same time, additional BMP Facts Sheets may be added. The need for such updates or modifications will be at the discretion of the County's GHP Program Administrator.

2.3 Inspections

The County's MS4 permit requires each facility covered by a GHP to have the following:

1. Written procedures for annually assessing County properties to prevent the discharge of pollutants, spills, and leaks into the County's storm sewer system; and

2. Written procedure for performing stormwater conveyance system inspections and for removing debris that may cause clogging, backups, and flooding.

To meet these requirements, each facility that is covered by a GHP will be required to complete routine site inspections and stormwater conveyance system inspections as detailed below. Facility management will be responsible for ensuring the necessary inspections are completed within the required timeframes, that corrective actions (if needed) are performed, and that records of inspections and completed corrective actions are maintained for at least five (5) years.

2.3.1 GHP Site Inspections

The GHP Site Inspection will be performed to ensure that each GHP-covered facility is being properly maintained and that there are no visible signs of pollutants entering the stormwater system. GHP facilities shall utilize the *"GHP Site Inspection Checklist"*, provided in ***Appendix A*** to complete the required inspection. At a minimum, each facility is to be inspected every five (5) years.

2.3.2 Conveyance System Inspections

Stormwater conveyance systems are generally comprised of curbs and gutters, catch basins, inlet structures, swales, channels, piping, culverts, detention ponds, outfalls, or other structures that are used to collect, contain, and convey stormwater runoff.

The unimpeded movement of stormwater through conveyance systems is critical in avoiding backups and flooding, which can impede facility operations and damage property. Routine inspections and preventative care of stormwater conveyance systems can ensure these systems function as intended and prevent the need for costly and time-consuming repairs and retrofits.

Each GHP-covered facility is required to conduct routine stormwater conveyance system inspections to ensure the free flow of stormwater within the conveyance systems. GHP-covered facilities shall utilize the *"GHP Stormwater Conveyance System Inspection Checklist"*, provided in ***Appendix B*** to complete the required inspections. At a minimum, facility conveyance system inspections are to be conducted every five (5) years.

2.4 Training

As part of the GHP requirements within the County's Phase I NPDES permit, annual training must be provided to all appropriate staff and contractors. Such training shall be provided to any individuals responsible for implementing the GHP, performing the required inspections, or involved in any of the GHP-covered activities identified in this Plan. The required training shall focus on the duties and responsibilities assigned to site personnel in implementing the GHP and the best management practices (BMPs) prescribed in this Plan for preventing, reducing, and eliminating the discharge of pollutants during facility activities.

The County's MS4/GHP Program Coordinator will be responsible for developing the required training and disseminating it to GHP-covered facilities. Each GHP-covered facility will be responsible for identifying staff/contractors who must attend annual training, ensuring identified staff complete the required training, and maintaining records that document training dates and attendees. Training records and other documentation shall be maintained in ***Appendix D*** of this Plan.

3.0 BEST MANAGEMENT PRACTICES (BMPs)

This section contains a BMP Fact Sheet for each of the ten (10) GHP-regulated activities. The County's operations are not limited to the BMPs contained within this document; nor is the County required to implement all of the pollution prevention measures identified within each BMP Fact Sheet. The County should select and implement those measures that are applicable and have the greatest potential for reducing stormwater pollution.

The BMP Fact Sheets contained within this document offer recommended protocols for a particular activity. These pollution prevention measures are considered non-structural BMPs with a focus on source control of potential pollutants.

3.1 Applicability of BMP Fact Sheets

The *"GHP Applicability Certification"* completed for this facility has identified the activities conducted at this facility that require coverage under this Plan. Each of the BMP Fact Sheets shall be marked as to whether they are applicable or not applicable to this facility. The Applicable/Not Applicable indicator on each BMP Fact Sheet can be revised in response to changes in operations at the facility.

3.2 BMP Fact Sheets

BMP Fact Sheets can be found on the following pages. For the sake of consistency, the general outline of a BMP Fact Sheet will be as follows:

- Identification of GHP-covered activity.
- Applicability of the BMP Fact Sheet to the facility.
- A general description of the concern the activity poses to stormwater.
- Recommended pollution prevention measures for reducing/eliminating stormwater pollution.
- Additional sources of information, if applicable.

WASTE MANAGEMENT

Not Applicable ☒ Applicable ☐

CONCERN

Improperly managed waste can allow trash and debris to be washed into storm drains which poses a concern to water quality, marine life, and public health. It also has the potential to create obstructions in the drainage system, which can lead to backups and flooding. Additionally, improper storage and handling of waste materials can allow pollutants including oils and greases, toxic and chemical compounds (including nutrients), bacteria, metals, and other potentially hazardous wastes to enter waterways.

POLLUTION PREVENTION MEASURES

General *(applicable to all waste management activities)*

1) Provide suitable containers, preferably with working covers, to collect waste materials.
2) Ensure that appropriate waste containers are available in areas where waste is generated.
3) Provide a cover over waste storage areas, if feasible.
4) Avoid positioning waste receptacles near storm drains, water bodies, or areas of concentrated runoff.
5) Ensure that lids to waste containers *(if present)* are kept closed to prevent the intrusion of precipitation and prevent trash from blowing out of the receptacle.
6) For waste receptacles, which do not have lids and could leak, containers should be inspected regularly and controls (e.g., containment, spill response, etc.) shall be enacted whenever leaks or dry-weather discharges are observed.
7) Routinely inspect waste containers, roll-offs, compactors, and other waste receptacles for the presence of excessive waste accumulation and overflowing containers.
8) Ensure that wastes accumulating on the ground are placed in a suitable waste container.
9) Ensure that wastes are removed from the facility regularly by a licensed and contracted vendor.
10) Repair or replace damaged waste container lids.

Trash Compactors

1) Routinely inspect trash compactors for malfunctioning equipment or leaking hydraulic oil and provide the appropriate spill response if leaking equipment is encountered.
2) Regularly inspect compactors for leaking fluids and implement appropriate controls such as spill response/cleanup, collection or diversion of released fluids, providing secondary containment, etc. whenever leaks or dry-weather discharges are observed.

Scrap Metal Collection Containers

1) Avoid placing oily or grease-covered items in uncovered scrap metal recycling collection containers. If needed, wrap oily/greasy items in plastic garbage bags before placing them in the collection container.

Hazardous/Universal Wastes

1) Ensure that hazardous waste and universal wastes (e.g., batteries, bulbs, etc.) are collected and stored indoors or within covered collection containers.
2) Verify that hazardous/universal waste collection containers are in good condition, not leaking, and compatible with the wastes being stored.

Street Sweeping / Vactor Truck Material Storage

1) Do not site storage areas near storm drains, open water bodies, or areas of concentrated runoff.
2) Install sediment control devices (e.g. silt fence, silt socks, hay bales, etc.) around the staging area. Inspect these controls regularly and replace them as needed.
3) Cover the materials staging area, if feasible.
4) Provide oil-absorbent booms if necessary to control oily discharge. Inspect and replace booms regularly.
5) The staging area should be checked periodically for evidence of sediment migrating outside of the staging area. Material that has migrated out of the staging area should be promptly swept and returned to the staging area or disposed of.

Waste Cooking Oil/Grease

1) Maintain storage containers indoors or within a covered location, if feasible.
2) Storage containers shall be secured to prevent infiltration of precipitation and accidental/intentional spills or releases.
3) Carefully transfer waste oil/grease to the appropriate collection container to avoid spills.
4) Maintain suitable spill response equipment near collection containers. Immediately clean up any spilled oil/grease. Keep the exterior of the collection container clean and free of spilled oil/grease.
5) Provide secondary containment for collection containers, if feasible.

VEHICLE AND EQUIPMENT STORAGE

Not Applicable ☐ Applicable ☒

CONCERN

Vehicles and equipment may be stored onsite to support various County operations (e.g., construction, maintenance, snow removal, roadside assistance, mass transit, mowing, etc.). Examples of County owned and operated vehicles and equipment stored onsite at any given time include but are not limited to, the following: cars, trucks, buses, emergency response vehicles, garbage trucks, heavy equipment (backhoes, frontend loaders, etc.), forklifts, towable generators, portable light stands, and roadside equipment. Vehicle and equipment storage is considered a pollutant source due to the potential for incidental releases of petroleum products, lubricants, and various automotive fluids.

POLLUTION PREVENTION MEASURES

1) When possible/practical, store vehicles and equipment inside or under cover to prevent exposure to precipitation.
2) If vehicles or equipment must be stored outside, store vehicles/equipment in designated areas away from areas of concentrated runoff, storm drains, and other stormwater conveyances.
3) Vehicles and equipment shall be staged on impervious (asphalt or concrete) surfaces;
4) Keep truck beds clean and ensure potential stormwater pollutants are stored in closed containers, covered, or otherwise protected from stormwater exposure.
5) Conduct routine visual inspections of vehicles and equipment for the presence of leaks and respond accordingly.
6) Leaking vehicles/equipment should be moved inside or under cover. At a minimum, drip pans or absorbent pads shall be used to contain the leak until the vehicle/equipment can be relocated and the leak addressed.
7) Drain all fluids from wrecked or heavily damaged vehicles and equipment before storage.
8) Have an adequate supply of appropriate spill response equipment readily available and clean up all spills and leaks immediately utilizing dry cleaning techniques (e.g. absorbents and brooms).
9) Train staff in spill response so that incidents are addressed in a timely fashion.
10) Do not wash down areas where leaks have collected on ground surfaces; use dry cleaning methods such as granular absorbents and brooms.

VEHICLE AND EQUIPMENT REFUELING

Not Applicable ☒ Applicable ☐

CONCERN

Refueling activities associated with County vehicles and equipment can result in a discharge of fuel (gasoline and diesel fuel), which has the potential to enter the storm drain system and/or a nearby waterway. Such releases can introduce hydrocarbons, metals, and other toxic chemicals to stormwater runoff.

POLLUTION PREVENTION MEASURES

General Procedures *(applicable to all refueling activities)*

1) Routinely *(at least daily)* inspect the fuel dispensing area for any spills or leaks.
2) Routinely inspect fuel dispensing equipment looking for leaking or damaged equipment. Damaged or malfunctioning equipment shall be taken out of service until it has been repaired.
3) Fuels will only be dispensed into authorized vehicles, equipment, and approved containers.
4) Vehicle operators must remain outside of their vehicles and in attendance of fuel dispensers at all times while dispensing fuel.
5) Third-party contractors must be trained in proper refueling procedures and pollution prevention.
6) Do not utilize a foreign object to keep the dispenser nozzle in the open position. If present, a “hold-open” latch on the nozzle may be used.
7) Do not “top off” a vehicle’s fuel tank once the dispenser nozzle’s automatic shut-off has been activated. Topping off tanks may result in spills. Post signs in fueling areas warning vehicle operators against "topping off" of vehicle fuel tanks.
8) After refueling has stopped, allow several seconds to pass before removing the nozzle and returning it to the dispenser. This will prevent incidental dripping from the nozzle.
9) Employees refueling vehicles shall note the location of the “Emergency Fuel Shut Off” switch, to be used to stop the flow of fuel to the dispensers in the event of a release or emergency.
10) Have an adequate supply of appropriate spill response equipment readily available and clean up all spills immediately utilizing dry cleaning techniques (e.g. absorbents and brooms).
11) Immediately clean up and dispose of used absorbent material.
12) Do not wash down fueling areas; use dry cleaning methods such as granular absorbents and brooms.
13) Conduct refueling activities over impervious (e.g. concrete) surfaces. Place drip pans or absorbent pads under the nozzle if fueling occurs over a permeable surface such as grass or soil.
14) Install oil control devices in storm drains that may receive contaminated runoff from fueling areas.
15) Cover fueling areas with a canopy or roof to prevent direct contact with rainfall. Direct run-on away from fueling areas and collect fueling area run-off in a dead-end sump or oil-water separator.

Mobile Equipment Refueling

1) Refuel equipment on an impervious surface, downgradient of, and at the farthest practical distance from any storm drain, stormwater conveyance, stormwater management feature, or waterway.
2) Utilize secondary containment when refueling equipment (when practical).
3) Ensure mobile refuelers are parked in designated locations and away from areas of concentrated run-off, storm drains, and other stormwater conveyances.
4) Ensure that procedures are in place and that staff is properly trained in spill response/cleanup so that leaks and spills are addressed appropriately and promptly.

VEHICLE MAINTENANCE

GH-04

Not Applicable ☒ Applicable ☐

CONCERN

Vehicle and equipment maintenance can impact the water quality of nearby waterways by exposing stormwater to various pollutants including petroleum hydrocarbons, solvents, antifreeze/coolants, used oil, lubricating oil, grease, brake fluid, metals, and various chemicals. Additionally, vehicles that are wrecked or awaiting repair can be a source of pollution if leaking fluids are not properly controlled.

POLLUTION PREVENTION MEASURES

1) Conduct vehicle and equipment maintenance activities indoors.
2) Make sure incoming vehicles and equipment are inspected for leaking fluids and oil.
3) Move leaking vehicles or equipment indoors or under cover as soon as possible. At a minimum, a drip pan or absorbent pads shall be utilized to contain the leak until the vehicle/equipment can be relocated and the leak addressed.
4) Avoid performing maintenance on vehicles in close proximity to exterior doorways, which may allow released fluids to migrate outdoors.
5) Have an adequate supply of appropriate spill response equipment readily available and clean up all spills and leaks immediately utilizing dry cleaning techniques (e.g. absorbents and brooms).
6) Keep maintenance areas neat and well organized. Remove dirt, debris, and used absorbent regularly.
7) Inspect maintenance areas as well as maintenance equipment on a routine basis.
8) Store vehicles, parts, and generated wastes indoors or off the ground and under cover whenever possible. When practical, provide secondary containment.
9) Promptly transfer used fluids to the proper waste container; do not leave full drip pans or other open containers around the shop. Empty and clean drip pans and containers regularly.
10) Waste liquids shall not be poured into floor drains, sinks, outdoor storm drain inlets, or other storm drains or sewer connections. Liquid wastes are to be collected in properly labeled containers and disposed of by a licensed waste hauler or other appropriate method.
11) Store leaking batteries in a sealed container and provide secondary containment, if feasible.
12) Clean all parts indoors utilizing a self-contained parts washer.
13) Do not hose down indoor service areas to storm drains or areas where it can seep into groundwater.
14) Maintain floor drains in good working order and inspect for proper function on a routine basis. Consider plugging floor drains that discharge to the storm sewer.
15) Ensure oil/water separators (if present) are maintained in proper working order and are checked on a routine basis for the presence of oil.
16) If maintenance work must be performed outdoors, adhere to the following requirements:
    - Conduct maintenance activities over an impervious surface, away from stormwater inlets.
    - Cover outdoor maintenance areas and direct stormwater run-on away from the area.
    - Use drip pans or drop cloths underneath the equipment to catch leaks and drips.
    - Have an adequate supply of appropriate spill response equipment readily available.
    - Clean all spills immediately using dry cleaning techniques (e.g. absorbents and brooms).
    - Avoid performing maintenance activities during precipitation events.
    - Limit temporary outdoor maintenance activities to a single shift/day if additional time is needed to cover the work area at the end of each day/shift.

BMP Fact Sheet

VEHICLE AND EQUIPMENT WASHING

GH-05

Not Applicable ☒ Applicable ☐

CONCERN

Vehicle and equipment washing can generate washwater that contains oil, grease, organic compounds, surfactants, phosphates, metals, and suspended solids. If vehicles/equipment are washed outdoors on impervious surfaces, dirty washwater can contaminate stormwater that ends up in waterways. Washing equipment over pervious surfaces can allow washwater to seep into the ground contaminating groundwater.

POLLUTION PREVENTION MEASURES

1) Vehicle and equipment washing should only be conducted in designated indoor wash bays that capture and recycle washwater to the extent practical.
2) Wastewater from the washing facility should be discharged to the sanitary sewer system under the authorization of a wastewater discharge permit issued by the local municipal authority.
3) The floor of indoor vehicle wash bays should be completely bermed or sloped to collect wash water and prevent migration outdoors.
4) No other activities (e.g., fluid changes, repairs, material storage) shall be performed in wash areas.
5) Keep the wash bay neat and well organized. Sweep or pick up all trash and debris daily or as needed.
6) Solid materials accumulated on vehicles or in vehicle beds (e.g. salt, soil, grass, etc.) shall be knocked off or otherwise removed from the vehicle (while inside the wash bay) prior to washing. Solid materials shall be collected and disposed of properly.
7) For vehicles too large to completely fit in the wash bays, only the portion of the vehicle physically located in the confines of the wash bay shall be cleaned. The vehicle shall then be rotated to allow for the remaining portion of the vehicle to be washed.
8) Use nozzles that automatically turn off water when not in use and consider high-pressure, low-volume sprays.
9) Avoid detergents as much as possible. If detergents are necessary, use a biodegradable, phosphate-free detergent.
10) If discharging to an oil-water separator, use a non-emulsifying detergent.
11) Inspect floor drain systems, holding tanks, and conveyances associated with designated wash areas regularly. Maintain oil/water separators and/or process flowthrough separators on a routine basis.
12) Use commercial car washes when vehicle or equipment washing cannot be performed onsite without causing impacts to stormwater.
13) If washing must occur onsite and outdoors, use a designated impervious area that is marked with posted signs indicating proper washing procedures. This area must be bermed to contain the wash water and graded to direct the wash water to the sanitary sewer, an oil-water separator, a holding tank, a dead-end sump, or other containment area. Captured water shall be disposed of properly.
14) Avoid steam cleaning and engine/undercarriage washing which can produce high pollutant concentrations. If steam cleaning or engine washing is necessary, perform such cleanings within isolated indoor areas, and ensure wash water is treated and discharged to the sanitary sewer (if permitted to do so) or captured for off-site disposal.
15) Train staff in proper washing techniques and how to confine washing to designated wash areas.
16) Consider alternatives to washing such as using air to blow grass and debris from small equipment, wet-wiping equipment with rags, etc.

BMP Fact Sheet

MATERIAL STORAGE

GH-06

Not Applicable ☐ Applicable ☒

CONCERN

The storage of petroleum products, chemicals, paints, cleaners, pesticides, fertilizers, bags of erodible materials like sand, cement, and soil, and other potential pollutants can negatively impact surface waters through the accidental releases or leaching of materials into stormwater. Unprotected outdoor storage areas can generate a wide range of stormwater pollutants, such as sediment, nutrients, toxic materials, and petroleum products.

POLLUTION PREVENTION MEASURES

1) Whenever possible, store containers (e.g. drums, bins, bags, cans, and totes) indoors or under cover to limit exposure to stormwater.
2) Designate specific areas for material delivery and storage that are away from heavy traffic areas, storm drains, stormwater conveyances, and areas of concentrated run-off.
3) Designated outdoor storage areas should be paved or consist of an impervious surface.
4) Provide secondary containment for materials whenever possible or required per regulation.
5) Store materials on pallets to prevent stormwater run-on from coming into contact with materials, prevent container corrosion, and allow for better leak detection. Pallets must be in good condition and promptly replaced once damaged or deteriorated.
6) Stack containers according to the manufacturer's recommendations to avoid damage.
7) Immediately replace damaged, corroded, or leaking containers.
8) Ensure all storage containers are clearly labeled with their contents.
9) Keep containers tightly sealed after use.
10) Maintain an accurate inventory of hazardous substances and limit on-site storage to that which is necessary to support facility operations.
11) Keep storage areas neat and well organized; remove debris and unneeded material promptly.
12) If empty drums are stored outdoors, ensure that all openings are equipped with caps to prevent water intrusion and that the drum/storage area is labeled "Empty Drums".
13) Have an adequate supply of appropriate spill response equipment readily available and clean up all spills and releases immediately utilizing dry cleaning techniques (e.g. sweeping/absorbents).
14) Clean up all migrating dry materials upon discovery and address the source of the release.
15) Provide perimeter controls (e.g., berms, rock check dams, etc.) for erodible stockpiles of materials such as mulch, sand, and gravel to prevent migration into the stormwater system.
16) Routinely inspect material storage areas for leaks, material migration, and damaged or corroded containers. Ensure that secondary containment and other perimeter controls are in satisfactory condition.
17) Additional visual inspections of outdoor storage areas should be conducted after significant rainfall events (i.e., greater than 0.5 inches).

BMP Fact Sheet

ABOVEGROUND STORAGE TANKS

GH-07

Not Applicable ☐ Applicable ☒

CONCERN

Aboveground storage tanks (ASTs) may be used to store fuels, automotive fluids, chemicals, or deicing fluids. Leaks from tanks, piping, or other equipment and releases during fluid transfers can all impact stormwater quality. It is critical to maintain ASTs in good working condition to prevent spills and/or releases from occurring. Improperly managed storage tanks can cause significant environmental impacts.

POLLUTION PREVENTION MEASURES

General *(applicable to all storage tanks)*

1) ASTs should be installed and maintained in accordance with COMAR 26.10 and applicable fire codes.
2) ASTs should be provided with secondary containment, whenever feasible or required by regulation.
3) Secondary containment areas shall be maintained clean and dry; drain valves must be kept closed; accumulated liquid shall only be discharged if there are no visible signs of impacts, and in accordance with applicable regulations.
4) Inspect ASTs monthly to identify any leaking or malfunctioning equipment and ensure tanks are functioning as designed.
5) ASTs shall be equipped with a form of liquid-level detection (i.e. sight gauge, electronic monitoring).
6) ASTs shall be equipped with overfill prevention (i.e. overfill alarm and/or overfill prevention valve).
7) Tanks and piping should be protected from vehicle impact via barriers, bollards, guard rails, etc.
8) Install ASTs on solid foundations over impervious surfaces, and away from areas of concentrated run-off, storm drains, and other stormwater conveyances.
9) Properly label all storage tanks (e.g., contents, capacity, etc.).
10) Keep remote fills and fill port spill buckets clean and dry.
11) Keep fill ports, gates, and tank areas secured when not in use to prevent fuel theft and tampering.
12) Have an adequate supply of appropriate spill response equipment readily available and clean up all spills and leaks immediately utilizing dry cleaning techniques (e.g. absorbents and brooms).
13) Facilities that maintain 1,320 gallons or more of aboveground oil products shall prepare and implement a Spill Prevention, Control, and Countermeasure (SPCC) Plan, per 40 CFR 112.
14) Facilities that maintain 1,000 gallons or more of used oil or 10,000 gallons or more of virgin oil in ASTs shall obtain an Individual Oil Operations Permit from the MDE, per COMAR 26.10.01.09.
15) Owners/Operators of facilities that maintain more than 2,500 gallons of oil in ASTs are required to register each AST with MDE, per COMAR 26.10.01.10.

Bulk Fluid Transfers (Deliveries)

1) All bulk fluid transfer operations shall be performed under the direct supervision of knowledgeable County personnel. At no time shall the delivery vehicle or delivery vehicle operator be unsupervised.
2) The product level within the tank must be measured and available capacity verified before delivery.
3) Deliveries shall be made via fill ports equipped with catch basins to capture drips and spills.
4) Ensure an adequate supply of appropriate spill response equipment is readily available.
5) Post signs in delivery area displaying proper delivery procedures and emergency contact information.

ABOVEGROUND STORAGE TANKS

Used Oil Tanks

1) County personnel must verify the level of product in used oil tanks prior to filling.
2) Used oil tanks should only be filled via designated fill ports. Pumping used oil into the tank via a closed piping system is preferred to manually pouring used oil into the tank.

Brine Tanks

1) If multiple tanks are located onsite, the tanks should be plumbed to ensure that the complete failure of one tank will not drain all the tanks in the system (tanks must be isolated).
2) Minimize seeping and leaking at fittings by properly supporting piping and fittings, using flexible connectors or hoses to reduce stress, and installing corrosion-resistant fittings.
3) Consider placing hoses in non-permeable trenches or using drip-less nozzles to reduce repeated small spills.

RESIDENT DROP-OFF CENTER

Not Applicable ☐ Applicable ☒

CONCERN

Resident Drop-Off Centers are publicly accessible facilities where residents can drop off used automotive fluids (i.e. oil or antifreeze), municipal waste, recyclable, and/or organic waste, typically free of charge. Improper transfer or management of the waste materials can allow a number of pollutants including oils and greases, toxic and chemical compounds, nutrients, metals, and other wastes to enter waterways.

POLLUTION PREVENTION MEASURES

General *(applicable to all materials collected)*

1) Clearly identify waste materials accepted by the facility, and clearly mark designated collection areas.
2) Waste material should be inspected by a County representative, prior to disposal.
3) Avoid positioning waste receptacles near storm drains, water bodies, or areas of concentrated runoff.
4) When practical, receiving areas should be covered.
5) Do not allow containers to overflow or waste materials to accumulate on the ground.

Automotive Fluid Collection

1) Used oil, antifreeze, and automotive fluid receiving areas should be on impervious surfaces, covered, and provided with secondary containment, which shall be maintained clean and dry.
2) Provide lidded waste receptacles in the receiving area for the public to dispose of empty containers. Waste receptacles shall be emptied routinely and waste disposed of properly.
3) Collection areas shall be inspected daily and all trash and spilled liquids appropriately cleaned up.
4) The available capacity of waste liquid collection containers shall be routinely verified and waste removals scheduled, as needed.
5) Install appropriate controls to prohibit the overfilling of waste fluid collection containers.
6) Place appropriate spill response equipment in close proximity to drop-off areas.
7) If aboveground tanks are used to collect waste fluids, refer to BMP Fact Sheet GHP-07 (Aboveground Storage Tanks) for additional recommendations.

Organic Debris Collection

1) Routinely transfer collected organic debris/waste to a composting or disposal facility.
2) Do not permit composting of organic waste except at properly designed and permitted facilities.
3) Enact controls to prevent leaves and other windblown debris from entering stormwater inlets.

Municipal Waste / Recyclables Collection

1) Refer to BMP Fact Sheet GHP-01 (Waste Management) for additional recommendations.

BMP Fact Sheet

STOCKPILES

GH-09

Not Applicable ☒ Applicable ☐

CONCERN

The County may stockpile various erodible materials, the type of material can vary depending on the needs of the County. Stockpiled material may include soil, sand, millings, slag, cinders, sawdust, landscaping bark, compost, etc. Exposed stockpiles can easily erode due to wind or precipitation and contribute suspended solids to stormwater runoff.

POLLUTION PREVENTION MEASURES

1) Maintain stockpiles of erodible materials within roofed storage buildings or covered storage bins, if feasible. If not, stockpile material on an impervious surface and cover the stockpile.
2) Temporary stockpiles should be placed on an impermeable membrane (tarp) for quick clean-up.
3) Locate stockpiles away from drain inlets, catch basins, swales, areas of concentrated stormwater flow, water bodies, and environmentally sensitive areas.
4) Divert stormwater flows away from/around the stockpiles using a diversion device (e.g., temporary swale, berm, sandbags, or diversion fence).
5) Cover temporary stockpiles of erodible materials with a tarp that has been adequately secured. The covers must be in place at all times when the stockpile is not in active use.
6) When accessing a portion of the stockpile, only remove a section of the cover to minimize exposure to the elements.
7) Use barriers to isolate stockpiled materials from high-traffic areas to prevent tracking of materials.
8) Sweep (do not wash or hose down) in front of material stockpile storage areas at regular intervals, following loading and unloading activities, and during times of heavy use.
9) If material is observed migrating from the stockpile, clean up all migrated material upon discovery and provide additional controls to reduce migration from the stockpile. If such measures are ineffective implement controls to capture pollutants before they migrate off-site (e.g. silt fencing, inlet filters, filter socks, at-grade inlet protection, etc.).
10) Minimize material stockpile inventory based on historical inventory/usage records and public safety operational needs.
11) Cold mix asphalt shall be stored on and covered with plastic sheeting or comparable material.
12) Routinely inspect outdoor material stockpiles to verify existing controls are functioning properly and for signs of erosion or material transport.

BMP Fact Sheet

DEICING MATERIALS

GH-10

Not Applicable ☒ Applicable ☐

CONCERN

When salt and other de-icing materials are stored outside and uncovered, they have a much higher risk of being eroded and transported offsite by stormwater. Improper de-icing material and sand storage may result in stormwater runoff containing elevated concentrations of sodium chloride and dissolved solids. Sodium chloride (e.g., road salt) is an effective deicer but can be highly corrosive to stormwater facilities. Smaller waterways are at a higher risk to increases in salinity, which can threaten aquatic species. Additionally, runoff containing sodium chloride has the potential to reach drinking water sources where small traces can adversely impact public health.

POLLUTION PREVENTION MEASURES

1) Bagged de-icing chemicals must be stored indoors. If stored outdoors bags must be kept on pallets (off the ground) and covered at all times. Bags must be intact without holes or openings.
2) Bulk de-icing materials shall be stored under cover and on an impervious surface.
3) Bulk salt storage areas/buildings shall not be overfilled so that salt spills out beyond the entrance of the storage area/building.
4) Bulk salt storage areas/buildings shall be maintained in a structurally sound condition and in a way that prevents the release of salt and the infiltration of stormwater. Deicing materials should not touch the sides of metal storage containers.
5) Barriers such as berms, gates, knee walls, tarps, and/or straw bales shall be placed at the entrances of bulk salt storage areas/buildings to prohibit the migration of salt and prevent contact with precipitation/stormwater runoff.
6) Routinely inspect storage areas for migrating materials or deterioration of containment structures. Sweep up all migrating materials upon discovery and repair the source of the migrating pollutant.
7) Loading areas should be constructed of impervious material and covered or enclosed, to the extent practical, to reduce potential contact with stormwater.
8) Minimize the distance de-icing materials are transported during loading/unloading activities.
9) Prevent and/or minimize the spillage of salt and de-icing materials during loading/unloading activities, immediately clean spilled or tracked materials.
10) Sweeping of storage and loading/unloading areas shall be conducted immediately following loading/unloading activities.
11) Do not store de-icing materials (bulk or bagged) over or immediately adjacent to drains or waterways.
12) Control site drainage by diverting stormwater run-on away from storage/loading areas using appropriate measures (e.g., curbing, berms, etc.).
13) Slope storage/loading areas to direct salt-contaminated runoff to an appropriate collection area, and in a manner that prevents the runoff from reaching adjacent soil or surface waters.
14) Excess salt shall be removed from salt handling equipment (trucks, spreaders, etc.) following use/prior to storage. All cleaning shall occur on an impervious surface, which is sloped or curbed to contain any washwater and direct it to a collection area for recycling or proper disposal.

Appendix A

GHP Site Inspection Checklist

GOOD HOUSEKEEPING PLAN (GHP)
SITE INSPECTION CHECKLIST

Facility Name: _____ **Inspection Date:** _____

Inspector Name: _____ **Inspector Signature:** _____

- The intent of this inspection is to ensure that the site is being properly maintained and that there are no visible signs of pollutants entering the stormwater system.
- **A shaded status box designates an item in a non-compliant status. Please provide an explanation for all non-compliant items and subsequently document all corrective actions performed.**
- Retain the completed checklists for five (5) years.

Item	Status			CORRECTIVE ACTIONS/COMMENTS *Items which cannot be corrected immediately must be reported to the GHP/NPDES Program Manager*
	Yes	No	N/A	
GENERAL HOUSEKEEPING				
1. Are exterior areas of the facility free of accumulated trash, debris, and unneeded materials?				
2. Are stormwater drains and inlets free from debris, sediment, and evidence of spills/releases?				
3. Is the facility free from signs of erosion?				
4. Are paved surfaces free of accumulated sediment?				
5. Is spill response equipment available in maintenance areas, fueling areas, hazardous material storage areas, and/or other required areas?				
6. Are spill kits and absorbent materials clearly labeled and accessible (i.e. items are not piled on top of or in front of spill kits)?				
7. Are spill kits secured from being stolen or misused?				
8. Is there a labeled container present for the disposal of used spill cleanup material?				

GOOD HOUSEKEEPING PLAN (GHP)
SITE INSPECTION CHECKLIST

Item	Status			CORRECTIVE ACTIONS/COMMENTS *Items which cannot be corrected immediately must be reported to the GHP/NPDES Program Manager*
	Yes	No	N/A	
9. Does spill response equipment (i.e. spill kits, absorbent materials) need to be replenished?				
WASTE MANAGEMENT				
10. Are areas around solid waste containers/roll-offs/compactors free of excessive trash accumulation or overflowing containers?				
11. Are areas around solid waste containers/roll-offs/compactors free of visible evidence (i.e. leaks, staining) of ongoing stormwater pollution?				
12. Are scrap metal containers in good order and free from evidence of leaking oil/grease?				
13. For dumpsters, roll-offs, and other waste receptacles, where leaks are observed, have appropriate controls (e.g. containment, spill response, etc.) been enacted?				
14. Are the lids (if present) to solid waste containers closed?				
15. Is street sweeping/vactor waste being managed appropriately (i.e. no evidence of material migration)?				
16. Is waste cooking grease managed appropriately (i.e. no evidence of spilled material or excessive staining)?				
VEHICLE & EQUIPMENT STORAGE				
17. Are stored vehicles/equipment free from leaks?				
18. If leaks are present, are they being managed appropriately (drip pan or other methods in place to capture released liquids)?				
19. Are storage areas free of visible evidence of chronic leaks/spills (i.e. significant staining)?				

GOOD HOUSEKEEPING PLAN (GHP)
SITE INSPECTION CHECKLIST

Item	Status			CORRECTIVE ACTIONS/COMMENTS *Items which cannot be corrected immediately must be reported to the GHP/NPDES Program Manager*
	Yes	No	N/A	
VEHICLE & EQUIPMENT REFUELING				
20. Are the areas around refueling areas free from evidence of spills or leaks?				
21. Are refueling areas free of used absorbent material that has not been swept/cleaned up?				
22. Do fuel dispensers and hoses appear to be in good working order and well-maintained?				
VEHICLE MAINTENANCE				
23. Is there any indication that vehicle maintenance activities are being conducted outdoors?				
24. Is there any indication that vehicle maintenance activities are contributing to stormwater pollution?				
VEHICLE & EQUIPMENT WASHING				
25. If performed on-site, does all vehicle/equipment washing occur indoors?				
26. Is wash water collected and disposed of properly?				
27. Is there any indication that vehicle/equipment wash water is being released to stormwater conveyances or pervious areas?				
MATERIAL STORAGE				
28. Are all outdoor storage areas free from visible signs of leaks or spilled material?				
29. Are material storage containers in good condition?				

GOOD HOUSEKEEPING PLAN (GHP)
SITE INSPECTION CHECKLIST

Item	Status			CORRECTIVE ACTIONS/COMMENTS *Items which cannot be corrected immediately must be reported to the GHP/NPDES Program Manager*
	Yes	No	N/A	
30. Are drums, totes, and other containers (that are <u>not</u> empty) stored off the ground and covered, or stored indoors?				
31. Are liquid-containing drums/totes located outdoors provided with secondary containment?				
32. Are containers that are located outdoors equipped with closed lids except when material transfers are occurring?				
33. Are materials, which could impact stormwater, stored away from heavy traffic areas, or protected from vehicle collisions?				
34. Are chemical storage containers properly labeled?				
35. If empty drums are stored outside, are all openings equipped with caps to prevent water intrusion?				
ABOVEGROUND STORAGE TANKS				
36. Are all storage tanks, and surrounding areas free from visible signs of leaks or spilled material?				
37. Do storage tanks appear to be in good working order (e.g. free of obvious signs of damage or malfunctioning equipment)?				
38. Are remote fills associated with tanks free of liquid and debris?				
RESIDENT DROP-OFF CENTERS				
39. Are waste collection areas clearly identified?				
40. Are used oil/antifreeze collection tanks, containment structures, and surrounding areas free from visible signs of leaks or spilled material?				

GOOD HOUSEKEEPING PLAN (GHP)
SITE INSPECTION CHECKLIST

Item	Status			CORRECTIVE ACTIONS/COMMENTS *Items which cannot be corrected immediately must be reported to the GHP/NPDES Program Manager*
	Yes	No	N/A	
41. Do used oil/antifreeze collection tanks appear to be in good working order (e.g. free of obvious signs of damage or malfunctioning equipment)?				
42. Are empty used oil/antifreeze containers being collected and disposed of in the trash?				
43. Are areas around waste/recyclables containers free of excessive trash accumulation or overflowing containers?				
44. Are areas around waste/recyclables containers free of visible evidence (i.e. leaks, staining) of ongoing stormwater pollution?				
45. Are organic debris collection areas free of visible evidence of ongoing stormwater pollution (e.g. leaves and debris in stormwater conveyances)?				
STOCKPILES				
46. Are material piles, including salt, soil, sand, and millings isolated (i.e. covered, bermed, etc.) to prevent stormwater run-on and run-off?				
47. Are areas surrounding material piles (e.g. salt, soil, sand, millings, etc.) free of tracked or migrated material?				
DEICING MATERIALS				
48. Are all deicing materials stored indoors or undercover?				
49. Are salt storage structures in good condition (e.g. no evidence of material escaping or stormwater infiltration)?				
50. Is the salt loading area clean?				

GOOD HOUSEKEEPING PLAN (GHP)
SITE INSPECTION CHECKLIST

Item	Status			CORRECTIVE ACTIONS/COMMENTS *Items which cannot be corrected immediately must be reported to the GHP/NPDES Program Manager*
	Yes	No	N/A	
51. If deicing materials are tarped, is the tarp secure and covering the entire pile?				
52. Are bags of salt stored indoors, or off the ground and covered?				

ADDITIONAL COMMENTS:

Appendix B

GHP Stormwater Conveyance System Inspection Checklist

GOOD HOUSEKEEPING PLAN (GHP)
STORMWATER CONVEYANCE SYSTEM INSPECTION CHECKLIST

Facility Name: _____ **Inspection Date:** _____

Inspector Name: _____ **Inspector Signature:** _____

- The intent of this inspection is to ensure the free flow of stormwater within on-site conveyance systems and prevent damage/flooding.
- **If maintenance is needed, please provide an explanation, and document all corrective actions performed.**
- **Inspections shall include visually accessible infrastructure only; at no time shall inspection personnel enter a confined space.**
- Retain the completed checklists for five (5) years.

Item	Item Checked (Y/N/NA)	Maintenance Needed (Y/N)	CORRECTIVE ACTIONS/COMMENTS *Items which cannot be corrected immediately must be reported to the GHP/NPDES Program Manager*
CATCH BASINS / INLETS			
1. Look for debris and sediment blocking catch basin grates. If found, remove.			
2. Look for damage or cracks to the frame, grate, basin walls or bottom. If found, schedule repairs or replacement.			
3. Look for sediment and debris in the catch basin sump. If sediment fills 60% of the sump or comes within 6” of a pipe it should be scheduled for cleaning.			
4. If any type of filtering device is present, verify that the filter is not clogged, torn, or damaged; clean if clogged, replace if damaged.			
PIPES / CULVERTS			
5. Look for evidence of clogged piping (e.g. visual obstructions, standing water within manholes/inlets structures, etc.). If found, remove or schedule cleaning.			
6. Verify vegetation growth, if present, does not impede water flow. If it does, mow, cut back, or remove.			

GOOD HOUSEKEEPING PLAN (GHP)

STORMWATER CONVEYANCE SYSTEM INSPECTION CHECKLIST

Item	Item Checked (Y/N/NA)	Maintenance Needed (Y/N)	CORRECTIVE ACTIONS/COMMENTS *Items which cannot be corrected immediately must be reported to the GHP/NPDES Program Manager*
7. Inspect for damaged piping, inlets, outlets, headwalls, wingwalls, or excessive erosion. If found, make or schedule repairs.			
DITCHES / TRAPEZOIDAL SWALES			
8. Check for erosion, slumping, or undercutting. If found, make or schedule repairs.			
9. Look for trash and sediment accumulation. Remove all trash and remove sediment if it will impede water flow or clog downstream structures.			
10. Verify vegetation growth does not impede water flow. If it does, mow, cut back, or remove. Remove any trees or shrubs growing within the ditch.			
11. Check the integrity of check dams, filter socks, or other flow dissipation/filtering devices within the ditch or swale. Perform or schedule service if they are clogged, damaged, or deteriorated.			
12. Check inlets and outlets for debris accumulation, damage, or erosion. If found, make or schedule repairs.			

ADDITIONAL COMMENTS:

GUIDANCE DOCUMENT
GOOD HOUSEKEEPING PLAN - STORMWATER CONVEYANCE INSPECTIONS

INTRODUCTION

Maintaining catch basins, stormwater inlets, and other stormwater conveyance structures on a regular basis will remove pollutants, prevent backups, and ensure the system functions as intended to avoid flooding.

Each GHP-covered facility is required to conduct routine stormwater conveyance system inspections to ensure the free flow of stormwater within the conveyance system(s). The GHP includes a *"GHP Stormwater Conveyance System Inspection Checklist"*, to be used when completing the required inspections. This document provides additional background and guidance to aid facility personnel in completing the inspections.

CATCH BASINS / INLETS

Catch basins and inlets are all points for stormwater to enter storm drain systems. These structures are typically part of a larger conveyance system with many interconnected components where the impairment of one component can compromise the functionality of the larger system. Inlets and catch basins are subject to functional impairment by a variety of conditions, including:

- Structural damage including from vehicles and plows
- Cracks/joint separation at piping (inlet and outlet) connections
- Leaking due to cracks and joint separation
- Missing or damaged grates and grate frames
- Corrosion
- Blockage caused by debris, sediment, vegetation, or other objects

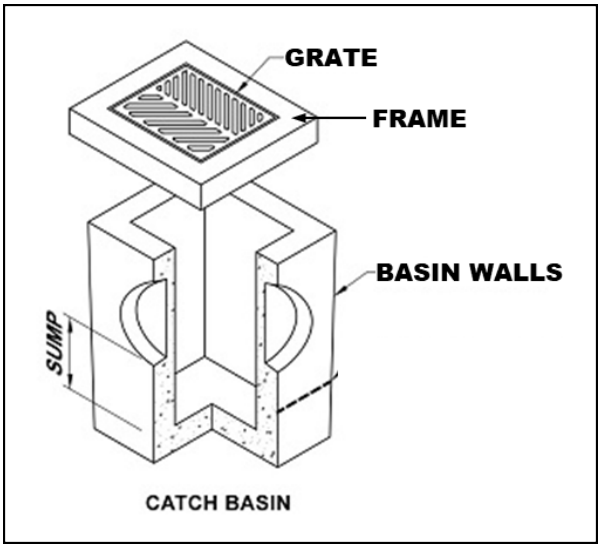

Figure 1 – Catch Basin Diagram

The following photos provide additional information related to the various inspection items, including examples of typical issues that may be encountered. The photo numbers correspond to the inspection checklist item number.

Inspection Item #1 [1]



Debris and sediment blocking inlet/catch basin grate.

Inspection Item #2 [2]



Damaged Grate

Inspection Item #2 [3]



Damaged Frame

Inspection Item #2 [4]



Failing brick walls with a stormwater inlet.

Inspection Item #2 [5]



Failing asphalt surrounding the inlet

[1] Grand Valley State University - https://www.gvsu.edu/groundswell/clogged-storm-drains-71.htm
[2] Georgia Department of Transportation – Stormwater System Inspection and Maintenance Manual, March 2020
[3] https://catchbasinauthority.ca/catch-basin-101/
[4] https://www.fixasphalt.com/catch-basin-repairs
[5] https://ccpia.org/catch-basin-and-manhole-inspections/

Inspection Item #3 [6]



Sediment and debris inside stormwater inlet

Inspection Item #3

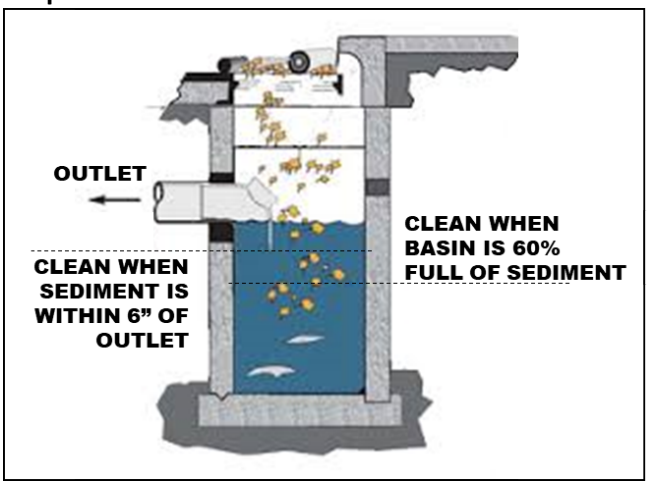

Remove sediment from a catch basin if it fills 60% of the sump or comes within 6" of a pipe.

Inspection Item #4 [7]



Example of inlet filter. Replace when filled or damaged. damaged.

Inspection Item #4 [8]



Example of an inlet filter sock, replace if

PIPES AND CULVERTS

Pipe systems are designed to convey stormwater runoff safely and effectively from inlets to various discharge points and outfalls. A culvert is a structure that channels water under an obstacle such as a roadway or railroad. These structures are subject to functional impairment by a variety of conditions, including:

- Blockage or obstruction due to build up of vegetation, debris, sediment, or other objects
- Cracks and/or joint separation
- Collapsed pipe
- Corrosion
- Root intrusion
- Lack of stabilization

[6] https://www.fixasphalt.com/catch-basin-repairs
[7] https://store.interstateproducts.com/products/Ultra-Drain-Guards/Ultra-Drain-Guard-Adjustable-Frame-Model
[8] https://www.newpig.com/pig-sediment-filter-sock/p/FLT787

Inspection Item #5 [9]



A pipe filled with sediment, inhibiting flow.

Inspection Item #5 [10]



Standing water around an inlet may indicate a blockage.

Inspection Item #6 [11]



Pipe conveyance filled with vegetation.

Inspection Item #7 [12]

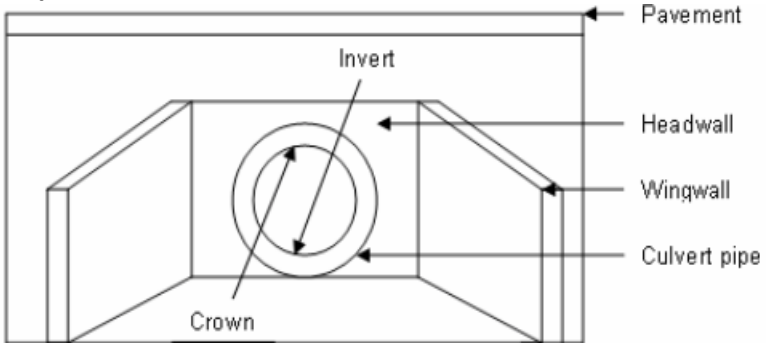

Diagram depicting various components of a culvert.

[9] Georgia Department of Transportation – Stormwater System Inspection and Maintenance Manual, March 2020
[10] https://www3.epa.gov/region9/water/npdes/stormwater-feature.html
[11] Georgia Department of Transportation – Stormwater System Inspection and Maintenance Manual, March 2020
[12] https://www.researchgate.net/figure/Components-of-a-Culvert_fig34_228685906

Inspection Item #7 [13]



A crack is the culvert headwall.

Inspection Item #7 [14]



Evidence of erosion around a culvert.

DITCHES AND SWALES

Ditches and swales serve similar functions. Both are used to convey stormwater. However, there are slight differences. A ditch is a narrow channel typically found along roads and at the edges of parking lots/driveways. A swale is like a ditch, but it is broad and shallow, and usually covered or lined with turfgrass or stone. Issues associated with these structures, which could impede their function include:

- Blockage or obstruction due to vegetation, debris, sediment, or other objects
- Erosion
- Rapidly moving water
- Lack of adequate vegetative cover for grass-lined channels

Inspection Item #8 [15]



Erosion and slumping within a drainage ditch.

Inspection Item #8 [16]



Slumping within a drainage swale.

[13] https://www.sbt-durabi.org/articles/xml/ARN0/
[14] https://lufkindailynews.com/news/local/culverts-crumbling-in-precinct-1/article_a9fed902-4379-5248-ab11-7471e2974298.html
[15] https://graniteseed.com/blog/how-to-stop-a-ditch-from-eroding/
[16] https://www.mnwcd.org/erosion-control

Inspection Item #9 [17]



Litter and debris within a ditch.

Inspection Item #9 [18]



Litter and debris within a swale.

Inspection Item #10 [19]



Cracks and joint separation in concrete channels, removal of vegetation may prevent future damage.

Inspection Item #11 [20]



Rock check dam across a channel.

Inspection Item #11 [21]



Filter sock check dams across a grass swale.

[17] https://craven.ces.ncsu.edu/2023/02/for-those-who-love-to-litter/
[18] https://www.cityoftulsa.org/government/departments/public-works/stormwater-quality/adopt-a-stream/
[19] Georgia Department of Transportation – Stormwater System Inspection and Maintenance Manual, March 2020
[20] EPA Stormwater Best Management Practice, Check Dams, December 2021
[21] EPA Stormwater Best Management Practice, Check Dams, December 2021

Inspection Item #12 [22]



Inlet to a rock-lined swale.

Inspection Item #12 [23]



Sediment accumulation at swale inlet.

END OF DOCUMENT

[22] https://www.stormwater.com/erosion-control/vegetation-management/article/13016118/inlet-protection-during-constructionand-after

[23] https://www.stormwater.com/erosion-control/vegetation-management/article/13016118/inlet-protection-during-constructionand-after

Appendix C

General Spill Response Procedures

SPILL RESPONSE AND NOTIFICATION PROCEDURES

A. Discovery of a Spill

1. Upon discovery of a spill, facility personnel should immediately assess the situation and determine if the spill is considered a "Minor" or "Major" spill. For a spill to be considered "Minor" all the following conditions must be satisfied:

    - ❖ The type of material spilled is known;
    - ❖ The spill is confined to the immediate work area;
    - ❖ The spill has not reached storm drains, sanitary sewer systems, open water, or surrounding soils;
    - ❖ The spill can be safely managed;
    - ❖ The employee can contain and clean up the spill with the PPE that is normally used in the work area;
    - ❖ The spill does not pose a serious threat of fire or an explosion; and
    - ❖ The spill does not pose conditions that are immediately dangerous to life or health.

2. If all the above conditions are met, the spill is considered "Minor". Refer to ***Section B*** of this document for appropriate response actions.

3. If all the above conditions are not met, then the spill is considered "Major". Refer to ***Section C*** of this document for appropriate response actions.

4. If a spill involves flammable liquids, ignitable vapors may be present - precautions must be taken to prevent ignition. Do not turn on or off equipment since sparks may be generated. Additionally, avoid the movement of equipment that could create static electricity. Larger spills of flammable liquids could pose a fire threat and would be considered a "Major" spill. Refer to ***Section C*** for appropriate actions.

B. Response to a "Minor" Spill

1. Identify the source of the spill and the direction in which the spill is heading.

2. Attempt to stop the spill at the source. Where applicable, the source of the spill shall be taken out of service until repairs can be made. If the spill is related to a fuel dispensing system, activate the Emergency Shut-Off (ESO) switch to prevent additional fuel disbursements.

3. If material is released outside a containment area, it is crucial that the material be contained as quickly as possible. Following proper safety procedures, use absorbent materials or diking to contain the spill. Prevent the spill from reaching storm drains, sanitary sewers, or open water. If a spill is flowing toward a drain, install temporary diking around the drain, block off the drain with a drain cover, or place absorbent material around the drain to prevent a discharge.

4. Once the spill has been stopped and contained, estimate the quantity of the spill. Consult applicable Safety Data Sheet (SDS) for material compatibility and environmental precautions. Note and follow recommendations regarding special precautions, spill response equipment, methods, or precautions. All cleanup work shall be conducted in accordance with existing safety protocols and SDS recommendations. Contact the facility Superintendent/Supervisor, or designee, for assistance if needed.

5. Recover or clean up the spilled material as much as possible. Material that cannot be reused must be discarded in accordance with state and federal regulations. Liquids absorbed by porous materials (e.g., wood, gravel, significant quantities of absorbent material, etc.) shall be placed into US DOT-approved 30-gallon or 55-gallon steel drums. Following cleanup, the container shall be secured and appropriately labeled to identify the contents and the date of the spill/cleanup. Containers shall be stored indoors and provided with secondary containment until transported off-site for disposal.

6. For spills that do not involve flammable liquids or other potential hazardous wastes, small quantities of used absorbent materials may be double bagged and disposed of along with municipal trash as long as all liquids have been absorbed (no free liquid may be present).

7. If the spilled material is a flammable liquid, corrosive liquid (pH ≤ 2 or ≥ 12.5), or other potential hazardous waste, all recovered product, impacted material, and used absorbent must be placed into a US DOT-approved containers/drums. Following cleanup, the container(s) shall be secured and appropriately labeled to identify the contents and the date of the spill/cleanup. Containers shall be stored indoors and provided with secondary containment until transported off-site for disposal. The facility Superintendent/ Supervisor, or designee shall be notified that a potential hazardous waste was released and that a waste characterization may be needed to facilitate proper disposal.

8. Surfaces that are contaminated by the spill shall be cleaned utilizing dry absorbent material. Tools and equipment that have been used in the cleanup must be decontaminated immediately after use. Decontamination water (if used) must be minimized, containerized, and disposed of properly.

9. If waste requires disposal, notify the facility Superintendent/Supervisor, or designee who will arrange for the proper characterization and disposal of any waste material. Representative sampling and analysis may be necessary to properly characterize the waste. The waste must be transported and disposed of in compliance with all applicable laws and regulations. Waste manifests, trip tickets, or bills of lading (if required) for waste disposal shall be kept on file.

10. Facility personnel shall restock/replace spill response equipment and absorbent materials used during the clean-up efforts.

11. The facility Superintendent/Supervisor, designee, or other appropriate County personnel shall be notified of the spill in accordance with ***Section D*** of this document.

C. Response to "Major" Spill

A "Major" spill is any discharge that does not meet the definition of a "Minor" spill. Any employee or contractor observing, being involved with, or recognizing a potential or actual spill of oil or other hazardous material, other than a "Minor" spill is responsible for performing the following actions:

1. If there is no danger to human health, attempt to stop and contain the spill at the source. If the spilled material is unknown, if PPE other than that which is typically used in your work area, is necessary to approach the spill area, or if assistance is required to stop the spill, do not attempt to contain the spill. If the spill is related to a fuel dispensing system, activate the Emergency Shut-Off (ESO) switch.

2. Most County employees lack the appropriate training to respond to "Major" spills. If the spill is of an unknown substance, is of a quantity that cannot be safely managed, or poses other risks beyond the training level of the employee, the employee should not attempt to contain or clean up the spill.

3. Evacuate individuals from the area and keep personnel away from the impacted area.

4. Immediately notify the facility Superintendent/Supervisor, or designee of the incident. The notified individual will determine the need for further evacuations and contact emergency response personnel (911), as necessary. *If a situation represents an immediate and grave danger to personnel, the public, structures, or other infrastructure, the individual discovering the incident may call 911 directly without first notifying facility management.*

5. The facility Superintendent/Supervisor or designee will determine if assistance from emergency response contractors is required to clean up the incident and will coordinate such spill response efforts with spill response contractors and other County agencies and first responders.

6. Facility personnel will provide assistance to emergency responders, as appropriate.

D. Reporting a Spill (Internal Notifications)

1. Once a spill is contained and cleanup operations have been initiated, the individual discovering the spill shall notify the appropriate County representatives and provide the following information:

    a) Identify the location, date, and time of the incident;
    b) Identify the type of material spilled or discharged;
    c) Estimate the quantity spilled and the rate of the spill;
    d) Identify the cause of the spill or discharge;
    e) Identify impacted media or infrastructure (soil, storm drains, open water bodies, etc.);
    f) Determine the extent of injuries involved; and
    g) Provide response measures implemented by the facility personnel.

E. Reporting a Spill (Regulatory Notifications)

State of Maryland Reporting Requirements (COMAR 26.10.01.05)

1. Upon discovery of a spill, the Responsible Person shall notify the MDE Emergency Response Division **within two (2) hours** by calling 866-633-4686. The caller shall be prepared to provide the following information:

    a) The time and date of the spill;
    b) The location and cause of the spill;
    c) The mode of transportation or type of facility involved;
    d) Type and quantity of oil spilled;
    e) Details regarding any assistance required;
    f) The name, address, and telephone number of the person making the report; and
    g) Any other pertinent information requested by the Department.

2. MDE will provide further guidance on additional responsibilities.

3. Within **ten (10) working days** of the completed removal and clean-up activities, the Responsible Person shall prepare a report using either County letterhead detailing the incident. The report shall contain the following:

    a) Date, time, and place of the spill;
    b) The amount and type of oil or hazardous substance spilled;
    c) A complete description of circumstances that contributed to the spill;
    d) A complete description of the containment and removal operations performed, including disposal sites to which oil refuse was transported;
    e) Procedures, methods, and precautions instituted to prevent the recurrence of an oil spill from the facility involved;
    f) Any other information considered necessary or required by the MDE for a complete description of the incident; and
    g) A certification that the information provided is true and correct to the knowledge of the person signing the report.

4. The completed report shall be submitted to mdeerd.mema@maryland.gov or faxed to 410-537-3932.

5. A digital copy of the completed report and any accompanying documentation shall be retained

Federal Reporting Requirements - National Response Center (40 CFR 110)

1. If any of the following criteria are met the Responsible Person shall notify the National Response Center (NRC) **within two (2) hours** of the spill discovery by calling 800-424-8802 or 202-426-2675.

    - ❖ The spill has caused a film, sheen, or discoloration of the surface water or shorelines;
    - ❖ The material spilled will violate applicable water quality standards (surface water or groundwater); or
    - ❖ The spill has caused a sludge or emulsion to be deposited beneath the surface of the water or on the shoreline.

2. At a minimum, the following information shall be provided to the NRC:

    a) Name, organization, and telephone number of reporting party;
    b) Name and address of the responsible party;
    c) Date, time, and location of the incident;
    d) Source and cause of the discharge;
    e) Type of material(s) discharged;
    f) Quantity of materials discharged;
    g) Danger or threat posed by discharge;
    h) Number and types of injuries (if any);
    i) Weather conditions at the incident location; and
    j) Other information to help emergency personnel respond to the incident.

3. If unable to report to the NRC, reports can be made to the EPA Regional Office at 800-438-2474 or the U.S. Coast Guard (USCG) at 202-372-1001. The NRC, EPA, or USCG will provide further guidance.

4. A digital record of the NRC notification and any accompanying documentation shall be retained on-site.

Federal Reporting Requirements - EPA Regional Administrator (40 CFR 112.4)

1. If the facility where the spill occurred is regulated under 40 CFR 112 and is required to have a Spill Prevention, Control, and Countermeasures (SPCC) Plan, the Responsible Person shall report the spill to the EPA Region III Administrator when any of the following criteria are met:

   - ❖ More than 1,000 gallons of oil is discharged to navigable waters or adjoining shorelines in a single incident; or
   - ❖ More than 42 gallons of oil is discharged to navigable waters or adjoining shorelines in each of two incidents occurring within any twelve-month period.

2. The report shall be made in writing **within 60 days** of the spill and shall contain:

   a) Name and location of the facility;
   b) Owner/operator name;
   c) Maximum storage/handling capacity of the facility and normal daily throughput;
   d) Corrective actions and countermeasures taken;
   e) Adequate description of the facility including maps, and flow diagrams;
   f) Cause of the discharge to navigable waters, including a failure analysis;
   g) Additional preventative measures taken or planned to minimize discharge reoccurrence; and
   h) Other information required by the EPA Regional III Administrator.

3. The report shall be submitted to the EPA Regional Administrator at the following address:

   EPA Regional Administrator
   US EPA Region 3
   1650 Arch Street (3RA00)
   Philadelphia, PA 19103-2029

4. A copy of the report shall be retained in the facility SPCC Plan.

Appendix D

Training Records

GOOD HOUSEKEEPING PLAN (GHP)
TRAINING ATTENDANCE LOG

FACILITY NAME: _____

DATE	NAME *(PRINT)*	SIGNATURE

By signing I affirm that I have completed the required annual training; and I am aware of and understand my responsibilities under this Plan.

GOOD HOUSEKEEPING PLAN (GHP)

Norrisville Recreation Complex
5310 Norrisville Road
White Hall, MD 21161

June 30, 2025

TABLE OF CONTENTS

1.0 BACKGROUND & INTRODUCTION 1
1.1 Objectives 1
1.2 Potential Stormwater Pollutants 1
2.0 RESPONSIBILITIES 3
2.1 GHP Implementation 3
2.2 Plan Review and Modification 3
2.3 Inspections 3
2.3.1 GHP Site Inspections 3
2.3.2 Conveyance System Inspections 4
2.4 Training 4
3.0 BEST MANAGEMENT PRACTICES (BMPs) 5
3.1 Applicability of BMP Fact Sheets 5
3.2 BMP Fact Sheets 5

List of Tables

TABLE 1-1 POTENTIAL STORMWATER POLLUTANTS AND THEIR SOURCES 2

List of BMP Fact Sheets

GH-01 - Waste Management
GH-02 - Vehicle and Equipment Storage
GH-03 - Vehicle/Equipment Refueling
GH-04 - Vehicle Maintenance
GH-05 - Vehicle/Equipment Washing
GH-06 - Material Storage
GH-07 - Aboveground Storage Tanks
GH-08 - Resident Drop-Off Centers
GH-09 - Stockpiles
GH-10 - Deicing Materials

Appendices

Appendix A: GHP Site Inspection Checklist
Appendix B: GHP Stormwater Conveyance Inspection Checklist
Appendix C: General Spill Response Procedures
Appendix D: Training Records

List of Acronyms

AST	-	Aboveground Storage Tank
BMP	-	Best Management Practice
CFR	-	Code of Federal Regulations
GHP	-	Good Housekeeping Plan
MDE	-	Maryland Department of the Environment
MS4	-	Municipal Separate Storm Sewer System
NPDES	-	National Pollutant Discharge Elimination System
SPCC	-	Spill Prevention, Control, and Countermeasure Plan

1.0 BACKGROUND & INTRODUCTION

Polluted stormwater runoff has the potential to enter the County's storm sewer systems (referred to as a municipal separate storm sewer system or MS4), and then discharge, untreated, into local water bodies. To address this potential stormwater pollution, the County is required to obtain a NPDES permit from the Maryland Department of the Environment (MDE). The NPDES Permit requires the County to take actions to prevent stormwater pollution, maintain storm sewer systems, monitor stormwater discharges, and develop and implement comprehensive management programs to minimize the discharge of pollutants from the storm sewer system.

To comply with Part IV.D.4.b of the County's Phase I MS4 Permit, the County must develop, implement, and maintain a Good Housekeeping Plan (GHP) for certain County-owned properties not required to be covered under Maryland's General Permit for Discharges from Stormwater Associated with Industrial Activities *(General Permit 12-SWA / 20-SW).*

To support this effort, a *"Good Housekeeping Plan Applicability Certification"* has been developed to evaluate and document if a specific County-owned facility is subject to the GHP requirements. The *"GHP Applicability Certification"* includes the following ten (10) potential stormwater polluting activities. If any of the covered activities are performed at the facility, then that facility is required to implement a site-specific GHP. The GHP will include each of the potential stormwater polluting activities identified in the *"GHP Applicability Certification"* and corresponding pollution prevention procedures.

- Waste Management
- Vehicle and Equipment Storage
- Vehicle/Equipment Refueling
- Vehicle Maintenance
- Vehicle/Equipment Washing
- Material Storage
- Aboveground Storage Tanks
- Resident Drop-Off Center
- Stockpiles
- Deicing Materials

1.1 Objectives

The GHP was developed to outline suitable practices, procedures, and protocols, or Best Management Practices ("BMPs") for reducing and/or preventing stormwater pollution associated with operations at covered County-owned properties. The intent of the pollution prevention procedures included in the GHP is to limit the release of materials with the potential to impact stormwater, this includes reducing or eliminating (to the extent practical):

- The occurrence of spills and leaks;
- The accidental dumping or release of materials;
- The accumulation of waste, trash, debris, unused parts/equipment, etc.;
- The exposure of hazardous materials to precipitation/run-off;
- Stormwater run-off contamination by improperly stored materials; and/or
- Illicit discharges to the storm drain system.

1.2 Potential Stormwater Pollutants

Table 1-1 on the following page provides a list of common potential pollutants that may result from the GHP-regulated activities identified above. Understanding the sources of these pollutants can help in achieving the goals and objectives of the GHP program.

TABLE 1-1 POTENTIAL STORMWATER POLLUTANTS AND THEIR SOURCES

		Waste Management	Vehicle/Equipment Storage	Vehicle/Equipment Refueling	Vehicle Maintenance	Vehicle/Equipment Washing	Material Storage	Aboveground Storage Tanks	Resident Drop-Off Center	Stockpiles	Deicing Materials
Pollutants	**Sources**	**Associated GHP Activity**									
Sediment	Land disturbance; erosion; paved surfaces; material stockpiles; waste storage; salt/abrasive application	X				X	X		X	X	X
Hydrocarbons *(petroleum compounds)*	Leaking vehicle and equipment; vehicle and equipment cleaning; spills; improper storage; maintenance activities; scrap metal disposal; improper disposal	X	X	X	X	X	X	X	X		
Metals	Vehicle brake and tire wear; vehicle/equipment exhaust; batteries; galvanized metal; paint and wood preservatives; fuels, pesticides, and cleaners; vehicle fueling, maintenance, and washing; industrial waste	X	X	X	X	X	X	X	X		
Toxic Chemicals	Pesticide application; improper chemical storage; leaks and spills from storage containers; leaking vehicles; maintenance activities	X	X		X	X	X	X	X		
Chlorides	De-Icing chemicals										X
Trash/Debris	Improper waste storage and disposal; leaking trash containers; littering; poor housekeeping	X	X				X		X		
Nutrients (nitrogen and Phosphorus)	Fertilizers; malfunctioning septic systems; sewer overflows; animal/pet waste; vehicle washing; decaying grass and leaves; leaking trash containers; atmospheric deposition	X				X	X		X		

2.0 RESPONSIBILITIES

2.1 GHP Implementation

A separate GHP is required for each covered facility. The following individual *(identified by name and/or title)* is accountable for the administration and implementation of the GHP at this facility and has the authority to commit the necessary resources to implement this Plan.

_____

Name and/or Title of Responsible Person

The Responsible Person listed above shall ensure that facility personnel involved in any GHP-covered activities identified in this Plan, are provided with access to, and are familiar with, the contents of this Plan.

2.2 Plan Review and Modification

The *"GHP Applicability Certification"* completed for this facility must be reviewed and updated once every permit term, or within one (1) year of substantial changes to a facility's operations that could reasonably contribute to stormwater pollution. Any newly constructed/acquired facility must be assessed within one (1) year of initiating operations at the facility. The facility's GHP must be amended and reissued to the facility within one (1) year of any changes to the facility's *"GHP Applicability Certification"*.

When warranted, the BMP Fact Sheets provided in Section 3.0 may need to be updated or revised. At the same time, additional BMP Facts Sheets may be added. The need for such updates or modifications will be at the discretion of the County's GHP Program Administrator.

2.3 Inspections

The County's MS4 permit requires each facility covered by a GHP to have the following:

1. Written procedures for annually assessing County properties to prevent the discharge of pollutants, spills, and leaks into the County's storm sewer system; and

2. Written procedure for performing stormwater conveyance system inspections and for removing debris that may cause clogging, backups, and flooding.

To meet these requirements, each facility that is covered by a GHP will be required to complete routine site inspections and stormwater conveyance system inspections as detailed below. Facility management will be responsible for ensuring the necessary inspections are completed within the required timeframes, that corrective actions (if needed) are performed, and that records of inspections and completed corrective actions are maintained for at least five (5) years.

2.3.1 GHP Site Inspections

The GHP Site Inspection will be performed to ensure that each GHP-covered facility is being properly maintained and that there are no visible signs of pollutants entering the stormwater system. GHP facilities shall utilize the *"GHP Site Inspection Checklist"*, provided in ***Appendix A*** to complete the required inspection. At a minimum, each facility is to be inspected every five (5) years.

2.3.2 Conveyance System Inspections

Stormwater conveyance systems are generally comprised of curbs and gutters, catch basins, inlet structures, swales, channels, piping, culverts, detention ponds, outfalls, or other structures that are used to collect, contain, and convey stormwater runoff.

The unimpeded movement of stormwater through conveyance systems is critical in avoiding backups and flooding, which can impede facility operations and damage property. Routine inspections and preventative care of stormwater conveyance systems can ensure these systems function as intended and prevent the need for costly and time-consuming repairs and retrofits.

Each GHP-covered facility is required to conduct routine stormwater conveyance system inspections to ensure the free flow of stormwater within the conveyance systems. GHP-covered facilities shall utilize the *"GHP Stormwater Conveyance System Inspection Checklist"*, provided in ***Appendix B*** to complete the required inspections. At a minimum, facility conveyance system inspections are to be conducted every five (5) years.

2.4 Training

As part of the GHP requirements within the County's Phase I NPDES permit, annual training must be provided to all appropriate staff and contractors. Such training shall be provided to any individuals responsible for implementing the GHP, performing the required inspections, or involved in any of the GHP-covered activities identified in this Plan. The required training shall focus on the duties and responsibilities assigned to site personnel in implementing the GHP and the best management practices (BMPs) prescribed in this Plan for preventing, reducing, and eliminating the discharge of pollutants during facility activities.

The County's MS4/GHP Program Coordinator will be responsible for developing the required training and disseminating it to GHP-covered facilities. Each GHP-covered facility will be responsible for identifying staff/contractors who must attend annual training, ensuring identified staff complete the required training, and maintaining records that document training dates and attendees. Training records and other documentation shall be maintained in ***Appendix D*** of this Plan.

3.0 BEST MANAGEMENT PRACTICES (BMPs)

This section contains a BMP Fact Sheet for each of the ten (10) GHP-regulated activities. The County's operations are not limited to the BMPs contained within this document; nor is the County required to implement all of the pollution prevention measures identified within each BMP Fact Sheet. The County should select and implement those measures that are applicable and have the greatest potential for reducing stormwater pollution.

The BMP Fact Sheets contained within this document offer recommended protocols for a particular activity. These pollution prevention measures are considered non-structural BMPs with a focus on source control of potential pollutants.

3.1 Applicability of BMP Fact Sheets

The *"GHP Applicability Certification"* completed for this facility has identified the activities conducted at this facility that require coverage under this Plan. Each of the BMP Fact Sheets shall be marked as to whether they are applicable or not applicable to this facility. The Applicable/Not Applicable indicator on each BMP Fact Sheet can be revised in response to changes in operations at the facility.

3.2 BMP Fact Sheets

BMP Fact Sheets can be found on the following pages. For the sake of consistency, the general outline of a BMP Fact Sheet will be as follows:

- Identification of GHP-covered activity.
- Applicability of the BMP Fact Sheet to the facility.
- A general description of the concern the activity poses to stormwater.
- Recommended pollution prevention measures for reducing/eliminating stormwater pollution.
- Additional sources of information, if applicable.

WASTE MANAGEMENT

Not Applicable ☒ Applicable ☐

CONCERN

Improperly managed waste can allow trash and debris to be washed into storm drains which poses a concern to water quality, marine life, and public health. It also has the potential to create obstructions in the drainage system, which can lead to backups and flooding. Additionally, improper storage and handling of waste materials can allow pollutants including oils and greases, toxic and chemical compounds (including nutrients), bacteria, metals, and other potentially hazardous wastes to enter waterways.

POLLUTION PREVENTION MEASURES

General *(applicable to all waste management activities)*

1) Provide suitable containers, preferably with working covers, to collect waste materials.
2) Ensure that appropriate waste containers are available in areas where waste is generated.
3) Provide a cover over waste storage areas, if feasible.
4) Avoid positioning waste receptacles near storm drains, water bodies, or areas of concentrated runoff.
5) Ensure that lids to waste containers *(if present)* are kept closed to prevent the intrusion of precipitation and prevent trash from blowing out of the receptacle.
6) For waste receptacles, which do not have lids and could leak, containers should be inspected regularly and controls (e.g., containment, spill response, etc.) shall be enacted whenever leaks or dry-weather discharges are observed.
7) Routinely inspect waste containers, roll-offs, compactors, and other waste receptacles for the presence of excessive waste accumulation and overflowing containers.
8) Ensure that wastes accumulating on the ground are placed in a suitable waste container.
9) Ensure that wastes are removed from the facility regularly by a licensed and contracted vendor.
10) Repair or replace damaged waste container lids.

Trash Compactors

1) Routinely inspect trash compactors for malfunctioning equipment or leaking hydraulic oil and provide the appropriate spill response if leaking equipment is encountered.
2) Regularly inspect compactors for leaking fluids and implement appropriate controls such as spill response/cleanup, collection or diversion of released fluids, providing secondary containment, etc. whenever leaks or dry-weather discharges are observed.

Scrap Metal Collection Containers

1) Avoid placing oily or grease-covered items in uncovered scrap metal recycling collection containers. If needed, wrap oily/greasy items in plastic garbage bags before placing them in the collection container.

Hazardous/Universal Wastes

1) Ensure that hazardous waste and universal wastes (e.g., batteries, bulbs, etc.) are collected and stored indoors or within covered collection containers.
2) Verify that hazardous/universal waste collection containers are in good condition, not leaking, and compatible with the wastes being stored.

Street Sweeping / Vactor Truck Material Storage

1) Do not site storage areas near storm drains, open water bodies, or areas of concentrated runoff.
2) Install sediment control devices (e.g. silt fence, silt socks, hay bales, etc.) around the staging area. Inspect these controls regularly and replace them as needed.
3) Cover the materials staging area, if feasible.
4) Provide oil-absorbent booms if necessary to control oily discharge. Inspect and replace booms regularly.
5) The staging area should be checked periodically for evidence of sediment migrating outside of the staging area. Material that has migrated out of the staging area should be promptly swept and returned to the staging area or disposed of.

Waste Cooking Oil/Grease

1) Maintain storage containers indoors or within a covered location, if feasible.
2) Storage containers shall be secured to prevent infiltration of precipitation and accidental/intentional spills or releases.
3) Carefully transfer waste oil/grease to the appropriate collection container to avoid spills.
4) Maintain suitable spill response equipment near collection containers. Immediately clean up any spilled oil/grease. Keep the exterior of the collection container clean and free of spilled oil/grease.
5) Provide secondary containment for collection containers, if feasible.

VEHICLE AND EQUIPMENT STORAGE

Not Applicable ☒ Applicable ☐

CONCERN

Vehicles and equipment may be stored onsite to support various County operations (e.g., construction, maintenance, snow removal, roadside assistance, mass transit, mowing, etc.). Examples of County owned and operated vehicles and equipment stored onsite at any given time include but are not limited to, the following: cars, trucks, buses, emergency response vehicles, garbage trucks, heavy equipment (backhoes, frontend loaders, etc.), forklifts, towable generators, portable light stands, and roadside equipment. Vehicle and equipment storage is considered a pollutant source due to the potential for incidental releases of petroleum products, lubricants, and various automotive fluids.

POLLUTION PREVENTION MEASURES

1) When possible/practical, store vehicles and equipment inside or under cover to prevent exposure to precipitation.
2) If vehicles or equipment must be stored outside, store vehicles/equipment in designated areas away from areas of concentrated runoff, storm drains, and other stormwater conveyances.
3) Vehicles and equipment shall be staged on impervious (asphalt or concrete) surfaces;
4) Keep truck beds clean and ensure potential stormwater pollutants are stored in closed containers, covered, or otherwise protected from stormwater exposure.
5) Conduct routine visual inspections of vehicles and equipment for the presence of leaks and respond accordingly.
6) Leaking vehicles/equipment should be moved inside or under cover. At a minimum, drip pans or absorbent pads shall be used to contain the leak until the vehicle/equipment can be relocated and the leak addressed.
7) Drain all fluids from wrecked or heavily damaged vehicles and equipment before storage.
8) Have an adequate supply of appropriate spill response equipment readily available and clean up all spills and leaks immediately utilizing dry cleaning techniques (e.g. absorbents and brooms).
9) Train staff in spill response so that incidents are addressed in a timely fashion.
10) Do not wash down areas where leaks have collected on ground surfaces; use dry cleaning methods such as granular absorbents and brooms.

VEHICLE AND EQUIPMENT REFUELING

Not Applicable ☒ Applicable ☐

CONCERN

Refueling activities associated with County vehicles and equipment can result in a discharge of fuel (gasoline and diesel fuel), which has the potential to enter the storm drain system and/or a nearby waterway. Such releases can introduce hydrocarbons, metals, and other toxic chemicals to stormwater runoff.

POLLUTION PREVENTION MEASURES

General Procedures *(applicable to all refueling activities)*

1) Routinely *(at least daily)* inspect the fuel dispensing area for any spills or leaks.
2) Routinely inspect fuel dispensing equipment looking for leaking or damaged equipment. Damaged or malfunctioning equipment shall be taken out of service until it has been repaired.
3) Fuels will only be dispensed into authorized vehicles, equipment, and approved containers.
4) Vehicle operators must remain outside of their vehicles and in attendance of fuel dispensers at all times while dispensing fuel.
5) Third-party contractors must be trained in proper refueling procedures and pollution prevention.
6) Do not utilize a foreign object to keep the dispenser nozzle in the open position. If present, a “hold-open” latch on the nozzle may be used.
7) Do not “top off” a vehicle’s fuel tank once the dispenser nozzle’s automatic shut-off has been activated. Topping off tanks may result in spills. Post signs in fueling areas warning vehicle operators against "topping off" of vehicle fuel tanks.
8) After refueling has stopped, allow several seconds to pass before removing the nozzle and returning it to the dispenser. This will prevent incidental dripping from the nozzle.
9) Employees refueling vehicles shall note the location of the “Emergency Fuel Shut Off” switch, to be used to stop the flow of fuel to the dispensers in the event of a release or emergency.
10) Have an adequate supply of appropriate spill response equipment readily available and clean up all spills immediately utilizing dry cleaning techniques (e.g. absorbents and brooms).
11) Immediately clean up and dispose of used absorbent material.
12) Do not wash down fueling areas; use dry cleaning methods such as granular absorbents and brooms.
13) Conduct refueling activities over impervious (e.g. concrete) surfaces. Place drip pans or absorbent pads under the nozzle if fueling occurs over a permeable surface such as grass or soil.
14) Install oil control devices in storm drains that may receive contaminated runoff from fueling areas.
15) Cover fueling areas with a canopy or roof to prevent direct contact with rainfall. Direct run-on away from fueling areas and collect fueling area run-off in a dead-end sump or oil-water separator.

Mobile Equipment Refueling

1) Refuel equipment on an impervious surface, downgradient of, and at the farthest practical distance from any storm drain, stormwater conveyance, stormwater management feature, or waterway.
2) Utilize secondary containment when refueling equipment (when practical).
3) Ensure mobile refuelers are parked in designated locations and away from areas of concentrated run-off, storm drains, and other stormwater conveyances.
4) Ensure that procedures are in place and that staff is properly trained in spill response/cleanup so that leaks and spills are addressed appropriately and promptly.

VEHICLE MAINTENANCE

GH-04

Not Applicable ☒ Applicable ☐

CONCERN

Vehicle and equipment maintenance can impact the water quality of nearby waterways by exposing stormwater to various pollutants including petroleum hydrocarbons, solvents, antifreeze/coolants, used oil, lubricating oil, grease, brake fluid, metals, and various chemicals. Additionally, vehicles that are wrecked or awaiting repair can be a source of pollution if leaking fluids are not properly controlled.

POLLUTION PREVENTION MEASURES

1) Conduct vehicle and equipment maintenance activities indoors.
2) Make sure incoming vehicles and equipment are inspected for leaking fluids and oil.
3) Move leaking vehicles or equipment indoors or under cover as soon as possible. At a minimum, a drip pan or absorbent pads shall be utilized to contain the leak until the vehicle/equipment can be relocated and the leak addressed.
4) Avoid performing maintenance on vehicles in close proximity to exterior doorways, which may allow released fluids to migrate outdoors.
5) Have an adequate supply of appropriate spill response equipment readily available and clean up all spills and leaks immediately utilizing dry cleaning techniques (e.g. absorbents and brooms).
6) Keep maintenance areas neat and well organized. Remove dirt, debris, and used absorbent regularly.
7) Inspect maintenance areas as well as maintenance equipment on a routine basis.
8) Store vehicles, parts, and generated wastes indoors or off the ground and under cover whenever possible. When practical, provide secondary containment.
9) Promptly transfer used fluids to the proper waste container; do not leave full drip pans or other open containers around the shop. Empty and clean drip pans and containers regularly.
10) Waste liquids shall not be poured into floor drains, sinks, outdoor storm drain inlets, or other storm drains or sewer connections. Liquid wastes are to be collected in properly labeled containers and disposed of by a licensed waste hauler or other appropriate method.
11) Store leaking batteries in a sealed container and provide secondary containment, if feasible.
12) Clean all parts indoors utilizing a self-contained parts washer.
13) Do not hose down indoor service areas to storm drains or areas where it can seep into groundwater.
14) Maintain floor drains in good working order and inspect for proper function on a routine basis. Consider plugging floor drains that discharge to the storm sewer.
15) Ensure oil/water separators (if present) are maintained in proper working order and are checked on a routine basis for the presence of oil.
16) If maintenance work must be performed outdoors, adhere to the following requirements:
    - Conduct maintenance activities over an impervious surface, away from stormwater inlets.
    - Cover outdoor maintenance areas and direct stormwater run-on away from the area.
    - Use drip pans or drop cloths underneath the equipment to catch leaks and drips.
    - Have an adequate supply of appropriate spill response equipment readily available.
    - Clean all spills immediately using dry cleaning techniques (e.g. absorbents and brooms).
    - Avoid performing maintenance activities during precipitation events.
    - Limit temporary outdoor maintenance activities to a single shift/day if additional time is needed to cover the work area at the end of each day/shift.

BMP Fact Sheet

VEHICLE AND EQUIPMENT WASHING

GH-05

Not Applicable ☒ Applicable ☐

CONCERN

Vehicle and equipment washing can generate washwater that contains oil, grease, organic compounds, surfactants, phosphates, metals, and suspended solids. If vehicles/equipment are washed outdoors on impervious surfaces, dirty washwater can contaminate stormwater that ends up in waterways. Washing equipment over pervious surfaces can allow washwater to seep into the ground contaminating groundwater.

POLLUTION PREVENTION MEASURES

1) Vehicle and equipment washing should only be conducted in designated indoor wash bays that capture and recycle washwater to the extent practical.
2) Wastewater from the washing facility should be discharged to the sanitary sewer system under the authorization of a wastewater discharge permit issued by the local municipal authority.
3) The floor of indoor vehicle wash bays should be completely bermed or sloped to collect wash water and prevent migration outdoors.
4) No other activities (e.g., fluid changes, repairs, material storage) shall be performed in wash areas.
5) Keep the wash bay neat and well organized. Sweep or pick up all trash and debris daily or as needed.
6) Solid materials accumulated on vehicles or in vehicle beds (e.g. salt, soil, grass, etc.) shall be knocked off or otherwise removed from the vehicle (while inside the wash bay) prior to washing. Solid materials shall be collected and disposed of properly.
7) For vehicles too large to completely fit in the wash bays, only the portion of the vehicle physically located in the confines of the wash bay shall be cleaned. The vehicle shall then be rotated to allow for the remaining portion of the vehicle to be washed.
8) Use nozzles that automatically turn off water when not in use and consider high-pressure, low-volume sprays.
9) Avoid detergents as much as possible. If detergents are necessary, use a biodegradable, phosphate-free detergent.
10) If discharging to an oil-water separator, use a non-emulsifying detergent.
11) Inspect floor drain systems, holding tanks, and conveyances associated with designated wash areas regularly. Maintain oil/water separators and/or process flowthrough separators on a routine basis.
12) Use commercial car washes when vehicle or equipment washing cannot be performed onsite without causing impacts to stormwater.
13) If washing must occur onsite and outdoors, use a designated impervious area that is marked with posted signs indicating proper washing procedures. This area must be bermed to contain the wash water and graded to direct the wash water to the sanitary sewer, an oil-water separator, a holding tank, a dead-end sump, or other containment area. Captured water shall be disposed of properly.
14) Avoid steam cleaning and engine/undercarriage washing which can produce high pollutant concentrations. If steam cleaning or engine washing is necessary, perform such cleanings within isolated indoor areas, and ensure wash water is treated and discharged to the sanitary sewer (if permitted to do so) or captured for off-site disposal.
15) Train staff in proper washing techniques and how to confine washing to designated wash areas.
16) Consider alternatives to washing such as using air to blow grass and debris from small equipment, wet-wiping equipment with rags, etc.

BMP Fact Sheet

MATERIAL STORAGE

GH-06

Not Applicable ☒ Applicable ☐

CONCERN

The storage of petroleum products, chemicals, paints, cleaners, pesticides, fertilizers, bags of erodible materials like sand, cement, and soil, and other potential pollutants can negatively impact surface waters through the accidental releases or leaching of materials into stormwater. Unprotected outdoor storage areas can generate a wide range of stormwater pollutants, such as sediment, nutrients, toxic materials, and petroleum products.

POLLUTION PREVENTION MEASURES

1) Whenever possible, store containers (e.g. drums, bins, bags, cans, and totes) indoors or under cover to limit exposure to stormwater.
2) Designate specific areas for material delivery and storage that are away from heavy traffic areas, storm drains, stormwater conveyances, and areas of concentrated run-off.
3) Designated outdoor storage areas should be paved or consist of an impervious surface.
4) Provide secondary containment for materials whenever possible or required per regulation.
5) Store materials on pallets to prevent stormwater run-on from coming into contact with materials, prevent container corrosion, and allow for better leak detection. Pallets must be in good condition and promptly replaced once damaged or deteriorated.
6) Stack containers according to the manufacturer's recommendations to avoid damage.
7) Immediately replace damaged, corroded, or leaking containers.
8) Ensure all storage containers are clearly labeled with their contents.
9) Keep containers tightly sealed after use.
10) Maintain an accurate inventory of hazardous substances and limit on-site storage to that which is necessary to support facility operations.
11) Keep storage areas neat and well organized; remove debris and unneeded material promptly.
12) If empty drums are stored outdoors, ensure that all openings are equipped with caps to prevent water intrusion and that the drum/storage area is labeled "Empty Drums".
13) Have an adequate supply of appropriate spill response equipment readily available and clean up all spills and releases immediately utilizing dry cleaning techniques (e.g. sweeping/absorbents).
14) Clean up all migrating dry materials upon discovery and address the source of the release.
15) Provide perimeter controls (e.g., berms, rock check dams, etc.) for erodible stockpiles of materials such as mulch, sand, and gravel to prevent migration into the stormwater system.
16) Routinely inspect material storage areas for leaks, material migration, and damaged or corroded containers. Ensure that secondary containment and other perimeter controls are in satisfactory condition.
17) Additional visual inspections of outdoor storage areas should be conducted after significant rainfall events (i.e., greater than 0.5 inches).

BMP Fact Sheet

ABOVEGROUND STORAGE TANKS

GH-07

Not Applicable ☒ Applicable ☐

CONCERN

Aboveground storage tanks (ASTs) may be used to store fuels, automotive fluids, chemicals, or deicing fluids. Leaks from tanks, piping, or other equipment and releases during fluid transfers can all impact stormwater quality. It is critical to maintain ASTs in good working condition to prevent spills and/or releases from occurring. Improperly managed storage tanks can cause significant environmental impacts.

POLLUTION PREVENTION MEASURES

General *(applicable to all storage tanks)*

1) ASTs should be installed and maintained in accordance with COMAR 26.10 and applicable fire codes.
2) ASTs should be provided with secondary containment, whenever feasible or required by regulation.
3) Secondary containment areas shall be maintained clean and dry; drain valves must be kept closed; accumulated liquid shall only be discharged if there are no visible signs of impacts, and in accordance with applicable regulations.
4) Inspect ASTs monthly to identify any leaking or malfunctioning equipment and ensure tanks are functioning as designed.
5) ASTs shall be equipped with a form of liquid-level detection (i.e. sight gauge, electronic monitoring).
6) ASTs shall be equipped with overfill prevention (i.e. overfill alarm and/or overfill prevention valve).
7) Tanks and piping should be protected from vehicle impact via barriers, bollards, guard rails, etc.
8) Install ASTs on solid foundations over impervious surfaces, and away from areas of concentrated run-off, storm drains, and other stormwater conveyances.
9) Properly label all storage tanks (e.g., contents, capacity, etc.).
10) Keep remote fills and fill port spill buckets clean and dry.
11) Keep fill ports, gates, and tank areas secured when not in use to prevent fuel theft and tampering.
12) Have an adequate supply of appropriate spill response equipment readily available and clean up all spills and leaks immediately utilizing dry cleaning techniques (e.g. absorbents and brooms).
13) Facilities that maintain 1,320 gallons or more of aboveground oil products shall prepare and implement a Spill Prevention, Control, and Countermeasure (SPCC) Plan, per 40 CFR 112.
14) Facilities that maintain 1,000 gallons or more of used oil or 10,000 gallons or more of virgin oil in ASTs shall obtain an Individual Oil Operations Permit from the MDE, per COMAR 26.10.01.09.
15) Owners/Operators of facilities that maintain more than 2,500 gallons of oil in ASTs are required to register each AST with MDE, per COMAR 26.10.01.10.

Bulk Fluid Transfers (Deliveries)

1) All bulk fluid transfer operations shall be performed under the direct supervision of knowledgeable County personnel. At no time shall the delivery vehicle or delivery vehicle operator be unsupervised.
2) The product level within the tank must be measured and available capacity verified before delivery.
3) Deliveries shall be made via fill ports equipped with catch basins to capture drips and spills.
4) Ensure an adequate supply of appropriate spill response equipment is readily available.
5) Post signs in delivery area displaying proper delivery procedures and emergency contact information.

ABOVEGROUND STORAGE TANKS

Used Oil Tanks

1) County personnel must verify the level of product in used oil tanks prior to filling.
2) Used oil tanks should only be filled via designated fill ports. Pumping used oil into the tank via a closed piping system is preferred to manually pouring used oil into the tank.

Brine Tanks

1) If multiple tanks are located onsite, the tanks should be plumbed to ensure that the complete failure of one tank will not drain all the tanks in the system (tanks must be isolated).
2) Minimize seeping and leaking at fittings by properly supporting piping and fittings, using flexible connectors or hoses to reduce stress, and installing corrosion-resistant fittings.
3) Consider placing hoses in non-permeable trenches or using drip-less nozzles to reduce repeated small spills.

RESIDENT DROP-OFF CENTER

Not Applicable ☐ Applicable ☒

CONCERN

Resident Drop-Off Centers are publicly accessible facilities where residents can drop off used automotive fluids (i.e. oil or antifreeze), municipal waste, recyclable, and/or organic waste, typically free of charge. Improper transfer or management of the waste materials can allow a number of pollutants including oils and greases, toxic and chemical compounds, nutrients, metals, and other wastes to enter waterways.

POLLUTION PREVENTION MEASURES

General *(applicable to all materials collected)*

1) Clearly identify waste materials accepted by the facility, and clearly mark designated collection areas.
2) Waste material should be inspected by a County representative, prior to disposal.
3) Avoid positioning waste receptacles near storm drains, water bodies, or areas of concentrated runoff.
4) When practical, receiving areas should be covered.
5) Do not allow containers to overflow or waste materials to accumulate on the ground.

Automotive Fluid Collection

1) Used oil, antifreeze, and automotive fluid receiving areas should be on impervious surfaces, covered, and provided with secondary containment, which shall be maintained clean and dry.
2) Provide lidded waste receptacles in the receiving area for the public to dispose of empty containers. Waste receptacles shall be emptied routinely and waste disposed of properly.
3) Collection areas shall be inspected daily and all trash and spilled liquids appropriately cleaned up.
4) The available capacity of waste liquid collection containers shall be routinely verified and waste removals scheduled, as needed.
5) Install appropriate controls to prohibit the overfilling of waste fluid collection containers.
6) Place appropriate spill response equipment in close proximity to drop-off areas.
7) If aboveground tanks are used to collect waste fluids, refer to BMP Fact Sheet GHP-07 (Aboveground Storage Tanks) for additional recommendations.

Organic Debris Collection

1) Routinely transfer collected organic debris/waste to a composting or disposal facility.
2) Do not permit composting of organic waste except at properly designed and permitted facilities.
3) Enact controls to prevent leaves and other windblown debris from entering stormwater inlets.

Municipal Waste / Recyclables Collection

1) Refer to BMP Fact Sheet GHP-01 (Waste Management) for additional recommendations.

BMP Fact Sheet

STOCKPILES

GH-09

Not Applicable ☒ Applicable ☐

CONCERN

The County may stockpile various erodible materials, the type of material can vary depending on the needs of the County. Stockpiled material may include soil, sand, millings, slag, cinders, sawdust, landscaping bark, compost, etc. Exposed stockpiles can easily erode due to wind or precipitation and contribute suspended solids to stormwater runoff.

POLLUTION PREVENTION MEASURES

1) Maintain stockpiles of erodible materials within roofed storage buildings or covered storage bins, if feasible. If not, stockpile material on an impervious surface and cover the stockpile.
2) Temporary stockpiles should be placed on an impermeable membrane (tarp) for quick clean-up.
3) Locate stockpiles away from drain inlets, catch basins, swales, areas of concentrated stormwater flow, water bodies, and environmentally sensitive areas.
4) Divert stormwater flows away from/around the stockpiles using a diversion device (e.g., temporary swale, berm, sandbags, or diversion fence).
5) Cover temporary stockpiles of erodible materials with a tarp that has been adequately secured. The covers must be in place at all times when the stockpile is not in active use.
6) When accessing a portion of the stockpile, only remove a section of the cover to minimize exposure to the elements.
7) Use barriers to isolate stockpiled materials from high-traffic areas to prevent tracking of materials.
8) Sweep (do not wash or hose down) in front of material stockpile storage areas at regular intervals, following loading and unloading activities, and during times of heavy use.
9) If material is observed migrating from the stockpile, clean up all migrated material upon discovery and provide additional controls to reduce migration from the stockpile. If such measures are ineffective implement controls to capture pollutants before they migrate off-site (e.g. silt fencing, inlet filters, filter socks, at-grade inlet protection, etc.).
10) Minimize material stockpile inventory based on historical inventory/usage records and public safety operational needs.
11) Cold mix asphalt shall be stored on and covered with plastic sheeting or comparable material.
12) Routinely inspect outdoor material stockpiles to verify existing controls are functioning properly and for signs of erosion or material transport.

BMP Fact Sheet

DEICING MATERIALS

GH-10

Not Applicable ☒ Applicable ☐

CONCERN

When salt and other de-icing materials are stored outside and uncovered, they have a much higher risk of being eroded and transported offsite by stormwater. Improper de-icing material and sand storage may result in stormwater runoff containing elevated concentrations of sodium chloride and dissolved solids. Sodium chloride (e.g., road salt) is an effective deicer but can be highly corrosive to stormwater facilities. Smaller waterways are at a higher risk to increases in salinity, which can threaten aquatic species. Additionally, runoff containing sodium chloride has the potential to reach drinking water sources where small traces can adversely impact public health.

POLLUTION PREVENTION MEASURES

1) Bagged de-icing chemicals must be stored indoors. If stored outdoors bags must be kept on pallets (off the ground) and covered at all times. Bags must be intact without holes or openings.
2) Bulk de-icing materials shall be stored under cover and on an impervious surface.
3) Bulk salt storage areas/buildings shall not be overfilled so that salt spills out beyond the entrance of the storage area/building.
4) Bulk salt storage areas/buildings shall be maintained in a structurally sound condition and in a way that prevents the release of salt and the infiltration of stormwater. Deicing materials should not touch the sides of metal storage containers.
5) Barriers such as berms, gates, knee walls, tarps, and/or straw bales shall be placed at the entrances of bulk salt storage areas/buildings to prohibit the migration of salt and prevent contact with precipitation/stormwater runoff.
6) Routinely inspect storage areas for migrating materials or deterioration of containment structures. Sweep up all migrating materials upon discovery and repair the source of the migrating pollutant.
7) Loading areas should be constructed of impervious material and covered or enclosed, to the extent practical, to reduce potential contact with stormwater.
8) Minimize the distance de-icing materials are transported during loading/unloading activities.
9) Prevent and/or minimize the spillage of salt and de-icing materials during loading/unloading activities, immediately clean spilled or tracked materials.
10) Sweeping of storage and loading/unloading areas shall be conducted immediately following loading/unloading activities.
11) Do not store de-icing materials (bulk or bagged) over or immediately adjacent to drains or waterways.
12) Control site drainage by diverting stormwater run-on away from storage/loading areas using appropriate measures (e.g., curbing, berms, etc.).
13) Slope storage/loading areas to direct salt-contaminated runoff to an appropriate collection area, and in a manner that prevents the runoff from reaching adjacent soil or surface waters.
14) Excess salt shall be removed from salt handling equipment (trucks, spreaders, etc.) following use/prior to storage. All cleaning shall occur on an impervious surface, which is sloped or curbed to contain any washwater and direct it to a collection area for recycling or proper disposal.

Appendix A

GHP Site Inspection Checklist

GOOD HOUSEKEEPING PLAN (GHP)
SITE INSPECTION CHECKLIST

Facility Name: _____ **Inspection Date:** _____

Inspector Name: _____ **Inspector Signature:** _____

- The intent of this inspection is to ensure that the site is being properly maintained and that there are no visible signs of pollutants entering the stormwater system.
- **A shaded status box designates an item in a non-compliant status. Please provide an explanation for all non-compliant items and subsequently document all corrective actions performed.**
- Retain the completed checklists for five (5) years.

Item	Status			CORRECTIVE ACTIONS/COMMENTS *Items which cannot be corrected immediately must be reported to the GHP/NPDES Program Manager*
	Yes	No	N/A	
GENERAL HOUSEKEEPING				
1. Are exterior areas of the facility free of accumulated trash, debris, and unneeded materials?				
2. Are stormwater drains and inlets free from debris, sediment, and evidence of spills/releases?				
3. Is the facility free from signs of erosion?				
4. Are paved surfaces free of accumulated sediment?				
5. Is spill response equipment available in maintenance areas, fueling areas, hazardous material storage areas, and/or other required areas?				
6. Are spill kits and absorbent materials clearly labeled and accessible (i.e. items are not piled on top of or in front of spill kits)?				
7. Are spill kits secured from being stolen or misused?				
8. Is there a labeled container present for the disposal of used spill cleanup material?				

GOOD HOUSEKEEPING PLAN (GHP)
SITE INSPECTION CHECKLIST

Item	Status			CORRECTIVE ACTIONS/COMMENTS *Items which cannot be corrected immediately must be reported to the GHP/NPDES Program Manager*
	Yes	No	N/A	
9. Does spill response equipment (i.e. spill kits, absorbent materials) need to be replenished?				
WASTE MANAGEMENT				
10. Are areas around solid waste containers/roll-offs/compactors free of excessive trash accumulation or overflowing containers?				
11. Are areas around solid waste containers/roll-offs/compactors free of visible evidence (i.e. leaks, staining) of ongoing stormwater pollution?				
12. Are scrap metal containers in good order and free from evidence of leaking oil/grease?				
13. For dumpsters, roll-offs, and other waste receptacles, where leaks are observed, have appropriate controls (e.g. containment, spill response, etc.) been enacted?				
14. Are the lids (if present) to solid waste containers closed?				
15. Is street sweeping/vactor waste being managed appropriately (i.e. no evidence of material migration)?				
16. Is waste cooking grease managed appropriately (i.e. no evidence of spilled material or excessive staining)?				
VEHICLE & EQUIPMENT STORAGE				
17. Are stored vehicles/equipment free from leaks?				
18. If leaks are present, are they being managed appropriately (drip pan or other methods in place to capture released liquids)?				
19. Are storage areas free of visible evidence of chronic leaks/spills (i.e. significant staining)?				

GOOD HOUSEKEEPING PLAN (GHP)
SITE INSPECTION CHECKLIST

Item	Status			CORRECTIVE ACTIONS/COMMENTS *Items which cannot be corrected immediately must be reported to the GHP/NPDES Program Manager*
	Yes	No	N/A	
VEHICLE & EQUIPMENT REFUELING				
20. Are the areas around refueling areas free from evidence of spills or leaks?				
21. Are refueling areas free of used absorbent material that has not been swept/cleaned up?				
22. Do fuel dispensers and hoses appear to be in good working order and well-maintained?				
VEHICLE MAINTENANCE				
23. Is there any indication that vehicle maintenance activities are being conducted outdoors?				
24. Is there any indication that vehicle maintenance activities are contributing to stormwater pollution?				
VEHICLE & EQUIPMENT WASHING				
25. If performed on-site, does all vehicle/equipment washing occur indoors?				
26. Is wash water collected and disposed of properly?				
27. Is there any indication that vehicle/equipment wash water is being released to stormwater conveyances or pervious areas?				
MATERIAL STORAGE				
28. Are all outdoor storage areas free from visible signs of leaks or spilled material?				
29. Are material storage containers in good condition?				

GOOD HOUSEKEEPING PLAN (GHP)
SITE INSPECTION CHECKLIST

Item	Status			CORRECTIVE ACTIONS/COMMENTS *Items which cannot be corrected immediately must be reported to the GHP/NPDES Program Manager*
	Yes	No	N/A	
30. Are drums, totes, and other containers (that are <u>not</u> empty) stored off the ground and covered, or stored indoors?				
31. Are liquid-containing drums/totes located outdoors provided with secondary containment?				
32. Are containers that are located outdoors equipped with closed lids except when material transfers are occurring?				
33. Are materials, which could impact stormwater, stored away from heavy traffic areas, or protected from vehicle collisions?				
34. Are chemical storage containers properly labeled?				
35. If empty drums are stored outside, are all openings equipped with caps to prevent water intrusion?				
ABOVEGROUND STORAGE TANKS				
36. Are all storage tanks, and surrounding areas free from visible signs of leaks or spilled material?				
37. Do storage tanks appear to be in good working order (e.g. free of obvious signs of damage or malfunctioning equipment)?				
38. Are remote fills associated with tanks free of liquid and debris?				
RESIDENT DROP-OFF CENTERS				
39. Are waste collection areas clearly identified?				
40. Are used oil/antifreeze collection tanks, containment structures, and surrounding areas free from visible signs of leaks or spilled material?				

GOOD HOUSEKEEPING PLAN (GHP)
SITE INSPECTION CHECKLIST

Item	Status			CORRECTIVE ACTIONS/COMMENTS *Items which cannot be corrected immediately must be reported to the GHP/NPDES Program Manager*
	Yes	No	N/A	
41. Do used oil/antifreeze collection tanks appear to be in good working order (e.g. free of obvious signs of damage or malfunctioning equipment)?				
42. Are empty used oil/antifreeze containers being collected and disposed of in the trash?				
43. Are areas around waste/recyclables containers free of excessive trash accumulation or overflowing containers?				
44. Are areas around waste/recyclables containers free of visible evidence (i.e. leaks, staining) of ongoing stormwater pollution?				
45. Are organic debris collection areas free of visible evidence of ongoing stormwater pollution (e.g. leaves and debris in stormwater conveyances)?				
STOCKPILES				
46. Are material piles, including salt, soil, sand, and millings isolated (i.e. covered, bermed, etc.) to prevent stormwater run-on and run-off?				
47. Are areas surrounding material piles (e.g. salt, soil, sand, millings, etc.) free of tracked or migrated material?				
DEICING MATERIALS				
48. Are all deicing materials stored indoors or undercover?				
49. Are salt storage structures in good condition (e.g. no evidence of material escaping or stormwater infiltration)?				
50. Is the salt loading area clean?				

GOOD HOUSEKEEPING PLAN (GHP)
SITE INSPECTION CHECKLIST

Item	Status			CORRECTIVE ACTIONS/COMMENTS *Items which cannot be corrected immediately must be reported to the GHP/NPDES Program Manager*
	Yes	No	N/A	
51. If deicing materials are tarped, is the tarp secure and covering the entire pile?				
52. Are bags of salt stored indoors, or off the ground and covered?				

ADDITIONAL COMMENTS:

Appendix B

GHP Stormwater Conveyance System Inspection Checklist

GOOD HOUSEKEEPING PLAN (GHP)
STORMWATER CONVEYANCE SYSTEM INSPECTION CHECKLIST

Facility Name: _____ **Inspection Date:** _____

Inspector Name: _____ **Inspector Signature:** _____

- The intent of this inspection is to ensure the free flow of stormwater within on-site conveyance systems and prevent damage/flooding.
- **If maintenance is needed, please provide an explanation, and document all corrective actions performed.**
- **Inspections shall include visually accessible infrastructure only; at no time shall inspection personnel enter a confined space.**
- Retain the completed checklists for five (5) years.

Item	Item Checked (Y/N/NA)	Maintenance Needed (Y/N)	CORRECTIVE ACTIONS/COMMENTS *Items which cannot be corrected immediately must be reported to the GHP/NPDES Program Manager*
CATCH BASINS / INLETS			
1. Look for debris and sediment blocking catch basin grates. If found, remove.			
2. Look for damage or cracks to the frame, grate, basin walls or bottom. If found, schedule repairs or replacement.			
3. Look for sediment and debris in the catch basin sump. If sediment fills 60% of the sump or comes within 6” of a pipe it should be scheduled for cleaning.			
4. If any type of filtering device is present, verify that the filter is not clogged, torn, or damaged; clean if clogged, replace if damaged.			
PIPES / CULVERTS			
5. Look for evidence of clogged piping (e.g. visual obstructions, standing water within manholes/inlets structures, etc.). If found, remove or schedule cleaning.			
6. Verify vegetation growth, if present, does not impede water flow. If it does, mow, cut back, or remove.			

GOOD HOUSEKEEPING PLAN (GHP)

STORMWATER CONVEYANCE SYSTEM INSPECTION CHECKLIST

Item	Item Checked (Y/N/NA)	Maintenance Needed (Y/N)	CORRECTIVE ACTIONS/COMMENTS *Items which cannot be corrected immediately must be reported to the GHP/NPDES Program Manager*
7. Inspect for damaged piping, inlets, outlets, headwalls, wingwalls, or excessive erosion. If found, make or schedule repairs.			
DITCHES / TRAPEZOIDAL SWALES			
8. Check for erosion, slumping, or undercutting. If found, make or schedule repairs.			
9. Look for trash and sediment accumulation. Remove all trash and remove sediment if it will impede water flow or clog downstream structures.			
10. Verify vegetation growth does not impede water flow. If it does, mow, cut back, or remove. Remove any trees or shrubs growing within the ditch.			
11. Check the integrity of check dams, filter socks, or other flow dissipation/filtering devices within the ditch or swale. Perform or schedule service if they are clogged, damaged, or deteriorated.			
12. Check inlets and outlets for debris accumulation, damage, or erosion. If found, make or schedule repairs.			

ADDITIONAL COMMENTS:

GUIDANCE DOCUMENT
GOOD HOUSEKEEPING PLAN - STORMWATER CONVEYANCE INSPECTIONS

INTRODUCTION

Maintaining catch basins, stormwater inlets, and other stormwater conveyance structures on a regular basis will remove pollutants, prevent backups, and ensure the system functions as intended to avoid flooding.

Each GHP-covered facility is required to conduct routine stormwater conveyance system inspections to ensure the free flow of stormwater within the conveyance system(s). The GHP includes a *"GHP Stormwater Conveyance System Inspection Checklist"*, to be used when completing the required inspections. This document provides additional background and guidance to aid facility personnel in completing the inspections.

CATCH BASINS / INLETS

Catch basins and inlets are all points for stormwater to enter storm drain systems. These structures are typically part of a larger conveyance system with many interconnected components where the impairment of one component can compromise the functionality of the larger system. Inlets and catch basins are subject to functional impairment by a variety of conditions, including:

- Structural damage including from vehicles and plows
- Cracks/joint separation at piping (inlet and outlet) connections
- Leaking due to cracks and joint separation
- Missing or damaged grates and grate frames
- Corrosion
- Blockage caused by debris, sediment, vegetation, or other objects

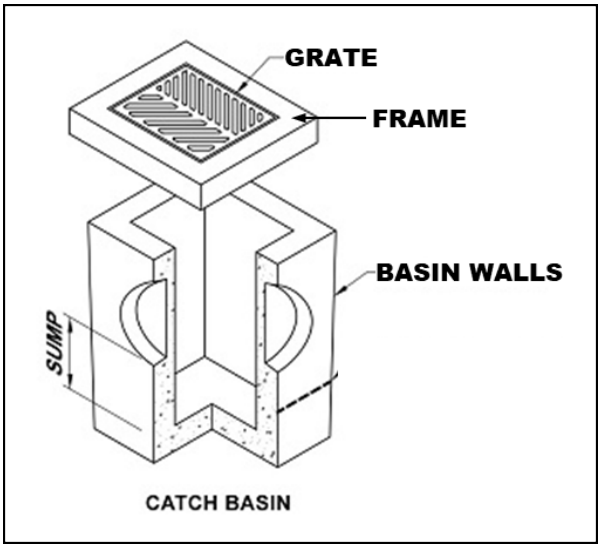

Figure 1 – Catch Basin Diagram

The following photos provide additional information related to the various inspection items, including examples of typical issues that may be encountered. The photo numbers correspond to the inspection checklist item number.

Inspection Item #1 [1]



Debris and sediment blocking inlet/catch basin grate.

Inspection Item #2 [2]



Damaged Grate

Inspection Item #2 [3]



Damaged Frame

Inspection Item #2 [4]



Failing brick walls with a stormwater inlet.

Inspection Item #2 [5]



Failing asphalt surrounding the inlet

[1] Grand Valley State University - https://www.gvsu.edu/groundswell/clogged-storm-drains-71.htm
[2] Georgia Department of Transportation – Stormwater System Inspection and Maintenance Manual, March 2020
[3] https://catchbasinauthority.ca/catch-basin-101/
[4] https://www.fixasphalt.com/catch-basin-repairs
[5] https://ccpia.org/catch-basin-and-manhole-inspections/

Inspection Item #3 [6]



Sediment and debris inside stormwater inlet

Inspection Item #3

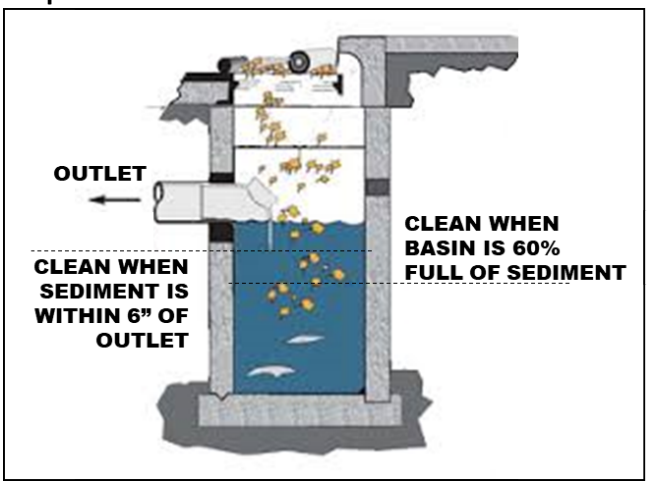

Remove sediment from a catch basin if it fills 60% of the sump or comes within 6" of a pipe.

Inspection Item #4 [7]



Example of inlet filter. Replace when filled or damaged. damaged.

Inspection Item #4 [8]



Example of an inlet filter sock, replace if

PIPES AND CULVERTS

Pipe systems are designed to convey stormwater runoff safely and effectively from inlets to various discharge points and outfalls. A culvert is a structure that channels water under an obstacle such as a roadway or railroad. These structures are subject to functional impairment by a variety of conditions, including:

- Blockage or obstruction due to build up of vegetation, debris, sediment, or other objects
- Cracks and/or joint separation
- Collapsed pipe
- Corrosion
- Root intrusion
- Lack of stabilization

[6] https://www.fixasphalt.com/catch-basin-repairs
[7] https://store.interstateproducts.com/products/Ultra-Drain-Guards/Ultra-Drain-Guard-Adjustable-Frame-Model
[8] https://www.newpig.com/pig-sediment-filter-sock/p/FLT787

Inspection Item #5 [9]



A pipe filled with sediment, inhibiting flow.

Inspection Item #5 [10]



Standing water around an inlet may indicate a blockage.

Inspection Item #6 [11]



Pipe conveyance filled with vegetation.

Inspection Item #7 [12]

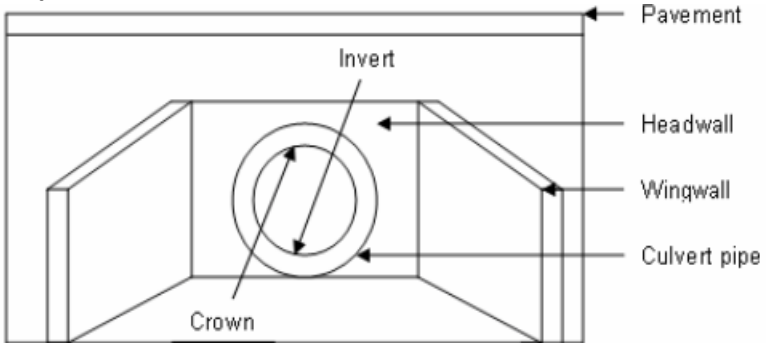

Diagram depicting various components of a culvert.

[9] Georgia Department of Transportation – Stormwater System Inspection and Maintenance Manual, March 2020
[10] https://www3.epa.gov/region9/water/npdes/stormwater-feature.html
[11] Georgia Department of Transportation – Stormwater System Inspection and Maintenance Manual, March 2020
[12] https://www.researchgate.net/figure/Components-of-a-Culvert_fig34_228685906

Inspection Item #7 [13]



A crack is the culvert headwall.

Inspection Item #7 [14]



Evidence of erosion around a culvert.

DITCHES AND SWALES

Ditches and swales serve similar functions. Both are used to convey stormwater. However, there are slight differences. A ditch is a narrow channel typically found along roads and at the edges of parking lots/driveways. A swale is like a ditch, but it is broad and shallow, and usually covered or lined with turfgrass or stone. Issues associated with these structures, which could impede their function include:

- Blockage or obstruction due to vegetation, debris, sediment, or other objects
- Erosion
- Rapidly moving water
- Lack of adequate vegetative cover for grass-lined channels

Inspection Item #8 [15]



Erosion and slumping within a drainage ditch.

Inspection Item #8 [16]



Slumping within a drainage swale.

[13] https://www.sbt-durabi.org/articles/xml/ARN0/
[14] https://lufkindailynews.com/news/local/culverts-crumbling-in-precinct-1/article_a9fed902-4379-5248-ab11-7471e2974298.html
[15] https://graniteseed.com/blog/how-to-stop-a-ditch-from-eroding/
[16] https://www.mnwcd.org/erosion-control

Inspection Item #9 [17]



Litter and debris within a ditch.

Inspection Item #9 [18]



Litter and debris within a swale.

Inspection Item #10 [19]



Cracks and joint separation in concrete channels, removal of vegetation may prevent future damage.

Inspection Item #11 [20]



Rock check dam across a channel.

Inspection Item #11 [21]



Filter sock check dams across a grass swale.

[17] https://craven.ces.ncsu.edu/2023/02/for-those-who-love-to-litter/
[18] https://www.cityoftulsa.org/government/departments/public-works/stormwater-quality/adopt-a-stream/
[19] Georgia Department of Transportation – Stormwater System Inspection and Maintenance Manual, March 2020
[20] EPA Stormwater Best Management Practice, Check Dams, December 2021
[21] EPA Stormwater Best Management Practice, Check Dams, December 2021

Inspection Item #12 [22]



Inlet to a rock-lined swale.

Inspection Item #12 [23]



Sediment accumulation at swale inlet.

END OF DOCUMENT

[22] https://www.stormwater.com/erosion-control/vegetation-management/article/13016118/inlet-protection-during-constructionand-after

[23] https://www.stormwater.com/erosion-control/vegetation-management/article/13016118/inlet-protection-during-constructionand-after

Appendix C

General Spill Response Procedures

SPILL RESPONSE AND NOTIFICATION PROCEDURES

A. Discovery of a Spill

1. Upon discovery of a spill, facility personnel should immediately assess the situation and determine if the spill is considered a "Minor" or "Major" spill. For a spill to be considered "Minor" all the following conditions must be satisfied:

    - ❖ The type of material spilled is known;
    - ❖ The spill is confined to the immediate work area;
    - ❖ The spill has not reached storm drains, sanitary sewer systems, open water, or surrounding soils;
    - ❖ The spill can be safely managed;
    - ❖ The employee can contain and clean up the spill with the PPE that is normally used in the work area;
    - ❖ The spill does not pose a serious threat of fire or an explosion; and
    - ❖ The spill does not pose conditions that are immediately dangerous to life or health.

2. If all the above conditions are met, the spill is considered "Minor". Refer to ***Section B*** of this document for appropriate response actions.

3. If all the above conditions are not met, then the spill is considered "Major". Refer to ***Section C*** of this document for appropriate response actions.

4. If a spill involves flammable liquids, ignitable vapors may be present - precautions must be taken to prevent ignition. Do not turn on or off equipment since sparks may be generated. Additionally, avoid the movement of equipment that could create static electricity. Larger spills of flammable liquids could pose a fire threat and would be considered a "Major" spill. Refer to ***Section C*** for appropriate actions.

B. Response to a "Minor" Spill

1. Identify the source of the spill and the direction in which the spill is heading.

2. Attempt to stop the spill at the source. Where applicable, the source of the spill shall be taken out of service until repairs can be made. If the spill is related to a fuel dispensing system, activate the Emergency Shut-Off (ESO) switch to prevent additional fuel disbursements.

3. If material is released outside a containment area, it is crucial that the material be contained as quickly as possible. Following proper safety procedures, use absorbent materials or diking to contain the spill. Prevent the spill from reaching storm drains, sanitary sewers, or open water. If a spill is flowing toward a drain, install temporary diking around the drain, block off the drain with a drain cover, or place absorbent material around the drain to prevent a discharge.

4. Once the spill has been stopped and contained, estimate the quantity of the spill. Consult applicable Safety Data Sheet (SDS) for material compatibility and environmental precautions. Note and follow recommendations regarding special precautions, spill response equipment, methods, or precautions. All cleanup work shall be conducted in accordance with existing safety protocols and SDS recommendations. Contact the facility Superintendent/Supervisor, or designee, for assistance if needed.

5. Recover or clean up the spilled material as much as possible. Material that cannot be reused must be discarded in accordance with state and federal regulations. Liquids absorbed by porous materials (e.g., wood, gravel, significant quantities of absorbent material, etc.) shall be placed into US DOT-approved 30-gallon or 55-gallon steel drums. Following cleanup, the container shall be secured and appropriately labeled to identify the contents and the date of the spill/cleanup. Containers shall be stored indoors and provided with secondary containment until transported off-site for disposal.

6. For spills that do not involve flammable liquids or other potential hazardous wastes, small quantities of used absorbent materials may be double bagged and disposed of along with municipal trash as long as all liquids have been absorbed (no free liquid may be present).

7. If the spilled material is a flammable liquid, corrosive liquid (pH ≤ 2 or ≥ 12.5), or other potential hazardous waste, all recovered product, impacted material, and used absorbent must be placed into a US DOT-approved containers/drums. Following cleanup, the container(s) shall be secured and appropriately labeled to identify the contents and the date of the spill/cleanup. Containers shall be stored indoors and provided with secondary containment until transported off-site for disposal. The facility Superintendent/ Supervisor, or designee shall be notified that a potential hazardous waste was released and that a waste characterization may be needed to facilitate proper disposal.

8. Surfaces that are contaminated by the spill shall be cleaned utilizing dry absorbent material. Tools and equipment that have been used in the cleanup must be decontaminated immediately after use. Decontamination water (if used) must be minimized, containerized, and disposed of properly.

9. If waste requires disposal, notify the facility Superintendent/Supervisor, or designee who will arrange for the proper characterization and disposal of any waste material. Representative sampling and analysis may be necessary to properly characterize the waste. The waste must be transported and disposed of in compliance with all applicable laws and regulations. Waste manifests, trip tickets, or bills of lading (if required) for waste disposal shall be kept on file.

10. Facility personnel shall restock/replace spill response equipment and absorbent materials used during the clean-up efforts.

11. The facility Superintendent/Supervisor, designee, or other appropriate County personnel shall be notified of the spill in accordance with ***Section D*** of this document.

C. Response to "Major" Spill

A "Major" spill is any discharge that does not meet the definition of a "Minor" spill. Any employee or contractor observing, being involved with, or recognizing a potential or actual spill of oil or other hazardous material, other than a "Minor" spill is responsible for performing the following actions:

1. If there is no danger to human health, attempt to stop and contain the spill at the source. If the spilled material is unknown, if PPE other than that which is typically used in your work area, is necessary to approach the spill area, or if assistance is required to stop the spill, do not attempt to contain the spill. If the spill is related to a fuel dispensing system, activate the Emergency Shut-Off (ESO) switch.

2. Most County employees lack the appropriate training to respond to "Major" spills. If the spill is of an unknown substance, is of a quantity that cannot be safely managed, or poses other risks beyond the training level of the employee, the employee should not attempt to contain or clean up the spill.

3. Evacuate individuals from the area and keep personnel away from the impacted area.

4. Immediately notify the facility Superintendent/Supervisor, or designee of the incident. The notified individual will determine the need for further evacuations and contact emergency response personnel (911), as necessary. *If a situation represents an immediate and grave danger to personnel, the public, structures, or other infrastructure, the individual discovering the incident may call 911 directly without first notifying facility management.*

5. The facility Superintendent/Supervisor or designee will determine if assistance from emergency response contractors is required to clean up the incident and will coordinate such spill response efforts with spill response contractors and other County agencies and first responders.

6. Facility personnel will provide assistance to emergency responders, as appropriate.

D. Reporting a Spill (Internal Notifications)

1. Once a spill is contained and cleanup operations have been initiated, the individual discovering the spill shall notify the appropriate County representatives and provide the following information:

    a) Identify the location, date, and time of the incident;
    b) Identify the type of material spilled or discharged;
    c) Estimate the quantity spilled and the rate of the spill;
    d) Identify the cause of the spill or discharge;
    e) Identify impacted media or infrastructure (soil, storm drains, open water bodies, etc.);
    f) Determine the extent of injuries involved; and
    g) Provide response measures implemented by the facility personnel.

E. Reporting a Spill (Regulatory Notifications)

State of Maryland Reporting Requirements (COMAR 26.10.01.05)

1. Upon discovery of a spill, the Responsible Person shall notify the MDE Emergency Response Division **within two (2) hours** by calling 866-633-4686. The caller shall be prepared to provide the following information:

    a) The time and date of the spill;
    b) The location and cause of the spill;
    c) The mode of transportation or type of facility involved;
    d) Type and quantity of oil spilled;
    e) Details regarding any assistance required;
    f) The name, address, and telephone number of the person making the report; and
    g) Any other pertinent information requested by the Department.

2. MDE will provide further guidance on additional responsibilities.

3. Within **ten (10) working days** of the completed removal and clean-up activities, the Responsible Person shall prepare a report using either County letterhead detailing the incident. The report shall contain the following:

    a) Date, time, and place of the spill;
    b) The amount and type of oil or hazardous substance spilled;
    c) A complete description of circumstances that contributed to the spill;
    d) A complete description of the containment and removal operations performed, including disposal sites to which oil refuse was transported;
    e) Procedures, methods, and precautions instituted to prevent the recurrence of an oil spill from the facility involved;
    f) Any other information considered necessary or required by the MDE for a complete description of the incident; and
    g) A certification that the information provided is true and correct to the knowledge of the person signing the report.

4. The completed report shall be submitted to mdeerd.mema@maryland.gov or faxed to 410-537-3932.

5. A digital copy of the completed report and any accompanying documentation shall be retained

Federal Reporting Requirements - National Response Center (40 CFR 110)

1. If any of the following criteria are met the Responsible Person shall notify the National Response Center (NRC) **within two (2) hours** of the spill discovery by calling 800-424-8802 or 202-426-2675.

    - ❖ The spill has caused a film, sheen, or discoloration of the surface water or shorelines;
    - ❖ The material spilled will violate applicable water quality standards (surface water or groundwater); or
    - ❖ The spill has caused a sludge or emulsion to be deposited beneath the surface of the water or on the shoreline.

2. At a minimum, the following information shall be provided to the NRC:

    a) Name, organization, and telephone number of reporting party;
    b) Name and address of the responsible party;
    c) Date, time, and location of the incident;
    d) Source and cause of the discharge;
    e) Type of material(s) discharged;
    f) Quantity of materials discharged;
    g) Danger or threat posed by discharge;
    h) Number and types of injuries (if any);
    i) Weather conditions at the incident location; and
    j) Other information to help emergency personnel respond to the incident.

3. If unable to report to the NRC, reports can be made to the EPA Regional Office at 800-438-2474 or the U.S. Coast Guard (USCG) at 202-372-1001. The NRC, EPA, or USCG will provide further guidance.

4. A digital record of the NRC notification and any accompanying documentation shall be retained on-site.

Federal Reporting Requirements - EPA Regional Administrator (40 CFR 112.4)

1. If the facility where the spill occurred is regulated under 40 CFR 112 and is required to have a Spill Prevention, Control, and Countermeasures (SPCC) Plan, the Responsible Person shall report the spill to the EPA Region III Administrator when any of the following criteria are met:

   - ❖ More than 1,000 gallons of oil is discharged to navigable waters or adjoining shorelines in a single incident; or
   - ❖ More than 42 gallons of oil is discharged to navigable waters or adjoining shorelines in each of two incidents occurring within any twelve-month period.

2. The report shall be made in writing **within 60 days** of the spill and shall contain:

   a) Name and location of the facility;
   b) Owner/operator name;
   c) Maximum storage/handling capacity of the facility and normal daily throughput;
   d) Corrective actions and countermeasures taken;
   e) Adequate description of the facility including maps, and flow diagrams;
   f) Cause of the discharge to navigable waters, including a failure analysis;
   g) Additional preventative measures taken or planned to minimize discharge reoccurrence; and
   h) Other information required by the EPA Regional III Administrator.

3. The report shall be submitted to the EPA Regional Administrator at the following address:

   EPA Regional Administrator
   US EPA Region 3
   1650 Arch Street (3RA00)
   Philadelphia, PA 19103-2029

4. A copy of the report shall be retained in the facility SPCC Plan.

Appendix D

Training Records

GOOD HOUSEKEEPING PLAN (GHP)
TRAINING ATTENDANCE LOG

FACILITY NAME: _____

DATE	NAME *(PRINT)*	SIGNATURE

By signing I affirm that I have completed the required annual training; and I am aware of and understand my responsibilities under this Plan.

GOOD HOUSEKEEPING PLAN (GHP)

North Harford Middle School
112 Pylesville Road
Pylesville, MD 21132

June 30, 2025

TABLE OF CONTENTS

1.0 BACKGROUND & INTRODUCTION 1
1.1 Objectives 1
1.2 Potential Stormwater Pollutants 1
2.0 RESPONSIBILITIES 3
2.1 GHP Implementation 3
2.2 Plan Review and Modification 3
2.3 Inspections 3
2.3.1 GHP Site Inspections 3
2.3.2 Conveyance System Inspections 4
2.4 Training 4
3.0 BEST MANAGEMENT PRACTICES (BMPs) 5
3.1 Applicability of BMP Fact Sheets 5
3.2 BMP Fact Sheets 5

List of Tables

TABLE 1-1 POTENTIAL STORMWATER POLLUTANTS AND THEIR SOURCES 2

List of BMP Fact Sheets

GH-01 - Waste Management
GH-02 - Vehicle and Equipment Storage
GH-03 - Vehicle/Equipment Refueling
GH-04 - Vehicle Maintenance
GH-05 - Vehicle/Equipment Washing
GH-06 - Material Storage
GH-07 - Aboveground Storage Tanks
GH-08 - Resident Drop-Off Centers
GH-09 - Stockpiles
GH-10 - Deicing Materials

Appendices

Appendix A: GHP Site Inspection Checklist
Appendix B: GHP Stormwater Conveyance Inspection Checklist
Appendix C: General Spill Response Procedures
Appendix D: Training Records

List of Acronyms

AST	-	Aboveground Storage Tank
BMP	-	Best Management Practice
CFR	-	Code of Federal Regulations
GHP	-	Good Housekeeping Plan
MDE	-	Maryland Department of the Environment
MS4	-	Municipal Separate Storm Sewer System
NPDES	-	National Pollutant Discharge Elimination System
SPCC	-	Spill Prevention, Control, and Countermeasure Plan

1.0 BACKGROUND & INTRODUCTION

Polluted stormwater runoff has the potential to enter the County's storm sewer systems (referred to as a municipal separate storm sewer system or MS4), and then discharge, untreated, into local water bodies. To address this potential stormwater pollution, the County is required to obtain a NPDES permit from the Maryland Department of the Environment (MDE). The NPDES Permit requires the County to take actions to prevent stormwater pollution, maintain storm sewer systems, monitor stormwater discharges, and develop and implement comprehensive management programs to minimize the discharge of pollutants from the storm sewer system.

To comply with Part IV.D.4.b of the County's Phase I MS4 Permit, the County must develop, implement, and maintain a Good Housekeeping Plan (GHP) for certain County-owned properties not required to be covered under Maryland's General Permit for Discharges from Stormwater Associated with Industrial Activities *(General Permit 12-SWA / 20-SW).*

To support this effort, a *"Good Housekeeping Plan Applicability Certification"* has been developed to evaluate and document if a specific County-owned facility is subject to the GHP requirements. The *"GHP Applicability Certification"* includes the following ten (10) potential stormwater polluting activities. If any of the covered activities are performed at the facility, then that facility is required to implement a site-specific GHP. The GHP will include each of the potential stormwater polluting activities identified in the *"GHP Applicability Certification"* and corresponding pollution prevention procedures.

- Waste Management
- Vehicle and Equipment Storage
- Vehicle/Equipment Refueling
- Vehicle Maintenance
- Vehicle/Equipment Washing
- Material Storage
- Aboveground Storage Tanks
- Resident Drop-Off Center
- Stockpiles
- Deicing Materials

1.1 Objectives

The GHP was developed to outline suitable practices, procedures, and protocols, or Best Management Practices ("BMPs") for reducing and/or preventing stormwater pollution associated with operations at covered County-owned properties. The intent of the pollution prevention procedures included in the GHP is to limit the release of materials with the potential to impact stormwater, this includes reducing or eliminating (to the extent practical):

- The occurrence of spills and leaks;
- The accidental dumping or release of materials;
- The accumulation of waste, trash, debris, unused parts/equipment, etc.;
- The exposure of hazardous materials to precipitation/run-off;
- Stormwater run-off contamination by improperly stored materials; and/or
- Illicit discharges to the storm drain system.

1.2 Potential Stormwater Pollutants

Table 1-1 on the following page provides a list of common potential pollutants that may result from the GHP-regulated activities identified above. Understanding the sources of these pollutants can help in achieving the goals and objectives of the GHP program.

TABLE 1-1 POTENTIAL STORMWATER POLLUTANTS AND THEIR SOURCES

		Waste Management	Vehicle/Equipment Storage	Vehicle/Equipment Refueling	Vehicle Maintenance	Vehicle/Equipment Washing	Material Storage	Aboveground Storage Tanks	Resident Drop-Off Center	Stockpiles	Deicing Materials
Pollutants	**Sources**	**Associated GHP Activity**									
Sediment	Land disturbance; erosion; paved surfaces; material stockpiles; waste storage; salt/abrasive application	X				X	X		X	X	X
Hydrocarbons *(petroleum compounds)*	Leaking vehicle and equipment; vehicle and equipment cleaning; spills; improper storage; maintenance activities; scrap metal disposal; improper disposal	X	X	X	X	X	X	X	X		
Metals	Vehicle brake and tire wear; vehicle/equipment exhaust; batteries; galvanized metal; paint and wood preservatives; fuels, pesticides, and cleaners; vehicle fueling, maintenance, and washing; industrial waste	X	X	X	X	X	X	X	X		
Toxic Chemicals	Pesticide application; improper chemical storage; leaks and spills from storage containers; leaking vehicles; maintenance activities	X	X		X	X	X	X	X		
Chlorides	De-Icing chemicals										X
Trash/Debris	Improper waste storage and disposal; leaking trash containers; littering; poor housekeeping	X	X				X		X		
Nutrients (nitrogen and Phosphorus)	Fertilizers; malfunctioning septic systems; sewer overflows; animal/pet waste; vehicle washing; decaying grass and leaves; leaking trash containers; atmospheric deposition	X				X	X		X		

2.0 RESPONSIBILITIES

2.1 GHP Implementation

A separate GHP is required for each covered facility. The following individual *(identified by name and/or title)* is accountable for the administration and implementation of the GHP at this facility and has the authority to commit the necessary resources to implement this Plan.

_____

Name and/or Title of Responsible Person

The Responsible Person listed above shall ensure that facility personnel involved in any GHP-covered activities identified in this Plan, are provided with access to, and are familiar with, the contents of this Plan.

2.2 Plan Review and Modification

The *"GHP Applicability Certification"* completed for this facility must be reviewed and updated once every permit term, or within one (1) year of substantial changes to a facility's operations that could reasonably contribute to stormwater pollution. Any newly constructed/acquired facility must be assessed within one (1) year of initiating operations at the facility. The facility's GHP must be amended and reissued to the facility within one (1) year of any changes to the facility's *"GHP Applicability Certification"*.

When warranted, the BMP Fact Sheets provided in Section 3.0 may need to be updated or revised. At the same time, additional BMP Facts Sheets may be added. The need for such updates or modifications will be at the discretion of the County's GHP Program Administrator.

2.3 Inspections

The County's MS4 permit requires each facility covered by a GHP to have the following:

1. Written procedures for annually assessing County properties to prevent the discharge of pollutants, spills, and leaks into the County's storm sewer system; and

2. Written procedure for performing stormwater conveyance system inspections and for removing debris that may cause clogging, backups, and flooding.

To meet these requirements, each facility that is covered by a GHP will be required to complete routine site inspections and stormwater conveyance system inspections as detailed below. Facility management will be responsible for ensuring the necessary inspections are completed within the required timeframes, that corrective actions (if needed) are performed, and that records of inspections and completed corrective actions are maintained for at least five (5) years.

2.3.1 GHP Site Inspections

The GHP Site Inspection will be performed to ensure that each GHP-covered facility is being properly maintained and that there are no visible signs of pollutants entering the stormwater system. GHP facilities shall utilize the *"GHP Site Inspection Checklist"*, provided in ***Appendix A*** to complete the required inspection. At a minimum, each facility is to be inspected every five (5) years.

2.3.2 Conveyance System Inspections

Stormwater conveyance systems are generally comprised of curbs and gutters, catch basins, inlet structures, swales, channels, piping, culverts, detention ponds, outfalls, or other structures that are used to collect, contain, and convey stormwater runoff.

The unimpeded movement of stormwater through conveyance systems is critical in avoiding backups and flooding, which can impede facility operations and damage property. Routine inspections and preventative care of stormwater conveyance systems can ensure these systems function as intended and prevent the need for costly and time-consuming repairs and retrofits.

Each GHP-covered facility is required to conduct routine stormwater conveyance system inspections to ensure the free flow of stormwater within the conveyance systems. GHP-covered facilities shall utilize the *"GHP Stormwater Conveyance System Inspection Checklist"*, provided in ***Appendix B*** to complete the required inspections. At a minimum, facility conveyance system inspections are to be conducted every five (5) years.

2.4 Training

As part of the GHP requirements within the County's Phase I NPDES permit, annual training must be provided to all appropriate staff and contractors. Such training shall be provided to any individuals responsible for implementing the GHP, performing the required inspections, or involved in any of the GHP-covered activities identified in this Plan. The required training shall focus on the duties and responsibilities assigned to site personnel in implementing the GHP and the best management practices (BMPs) prescribed in this Plan for preventing, reducing, and eliminating the discharge of pollutants during facility activities.

The County's MS4/GHP Program Coordinator will be responsible for developing the required training and disseminating it to GHP-covered facilities. Each GHP-covered facility will be responsible for identifying staff/contractors who must attend annual training, ensuring identified staff complete the required training, and maintaining records that document training dates and attendees. Training records and other documentation shall be maintained in ***Appendix D*** of this Plan.

3.0 BEST MANAGEMENT PRACTICES (BMPs)

This section contains a BMP Fact Sheet for each of the ten (10) GHP-regulated activities. The County's operations are not limited to the BMPs contained within this document; nor is the County required to implement all of the pollution prevention measures identified within each BMP Fact Sheet. The County should select and implement those measures that are applicable and have the greatest potential for reducing stormwater pollution.

The BMP Fact Sheets contained within this document offer recommended protocols for a particular activity. These pollution prevention measures are considered non-structural BMPs with a focus on source control of potential pollutants.

3.1 Applicability of BMP Fact Sheets

The *"GHP Applicability Certification"* completed for this facility has identified the activities conducted at this facility that require coverage under this Plan. Each of the BMP Fact Sheets shall be marked as to whether they are applicable or not applicable to this facility. The Applicable/Not Applicable indicator on each BMP Fact Sheet can be revised in response to changes in operations at the facility.

3.2 BMP Fact Sheets

BMP Fact Sheets can be found on the following pages. For the sake of consistency, the general outline of a BMP Fact Sheet will be as follows:

- Identification of GHP-covered activity.
- Applicability of the BMP Fact Sheet to the facility.
- A general description of the concern the activity poses to stormwater.
- Recommended pollution prevention measures for reducing/eliminating stormwater pollution.
- Additional sources of information, if applicable.

BMP Fact Sheet

WASTE MANAGEMENT

GH-01

Not Applicable ☒ Applicable ☐

CONCERN

Improperly managed waste can allow trash and debris to be washed into storm drains which poses a concern to water quality, marine life, and public health. It also has the potential to create obstructions in the drainage system, which can lead to backups and flooding. Additionally, improper storage and handling of waste materials can allow pollutants including oils and greases, toxic and chemical compounds (including nutrients), bacteria, metals, and other potentially hazardous wastes to enter waterways.

POLLUTION PREVENTION MEASURES

General *(applicable to all waste management activities)*

1) Provide suitable containers, preferably with working covers, to collect waste materials.
2) Ensure that appropriate waste containers are available in areas where waste is generated.
3) Provide a cover over waste storage areas, if feasible.
4) Avoid positioning waste receptacles near storm drains, water bodies, or areas of concentrated runoff.
5) Ensure that lids to waste containers *(if present)* are kept closed to prevent the intrusion of precipitation and prevent trash from blowing out of the receptacle.
6) For waste receptacles, which do not have lids and could leak, containers should be inspected regularly and controls (e.g., containment, spill response, etc.) shall be enacted whenever leaks or dry-weather discharges are observed.
7) Routinely inspect waste containers, roll-offs, compactors, and other waste receptacles for the presence of excessive waste accumulation and overflowing containers.
8) Ensure that wastes accumulating on the ground are placed in a suitable waste container.
9) Ensure that wastes are removed from the facility regularly by a licensed and contracted vendor.
10) Repair or replace damaged waste container lids.

Trash Compactors

1) Routinely inspect trash compactors for malfunctioning equipment or leaking hydraulic oil and provide the appropriate spill response if leaking equipment is encountered.
2) Regularly inspect compactors for leaking fluids and implement appropriate controls such as spill response/cleanup, collection or diversion of released fluids, providing secondary containment, etc. whenever leaks or dry-weather discharges are observed.

Scrap Metal Collection Containers

1) Avoid placing oily or grease-covered items in uncovered scrap metal recycling collection containers. If needed, wrap oily/greasy items in plastic garbage bags before placing them in the collection container.

Hazardous/Universal Wastes

1) Ensure that hazardous waste and universal wastes (e.g., batteries, bulbs, etc.) are collected and stored indoors or within covered collection containers.
2) Verify that hazardous/universal waste collection containers are in good condition, not leaking, and compatible with the wastes being stored.

Street Sweeping / Vactor Truck Material Storage

1) Do not site storage areas near storm drains, open water bodies, or areas of concentrated runoff.
2) Install sediment control devices (e.g. silt fence, silt socks, hay bales, etc.) around the staging area. Inspect these controls regularly and replace them as needed.
3) Cover the materials staging area, if feasible.
4) Provide oil-absorbent booms if necessary to control oily discharge. Inspect and replace booms regularly.
5) The staging area should be checked periodically for evidence of sediment migrating outside of the staging area. Material that has migrated out of the staging area should be promptly swept and returned to the staging area or disposed of.

Waste Cooking Oil/Grease

1) Maintain storage containers indoors or within a covered location, if feasible.
2) Storage containers shall be secured to prevent infiltration of precipitation and accidental/intentional spills or releases.
3) Carefully transfer waste oil/grease to the appropriate collection container to avoid spills.
4) Maintain suitable spill response equipment near collection containers. Immediately clean up any spilled oil/grease. Keep the exterior of the collection container clean and free of spilled oil/grease.
5) Provide secondary containment for collection containers, if feasible.

BMP Fact Sheet

VEHICLE AND EQUIPMENT STORAGE

GH-02

Not Applicable ☒ Applicable ☐

CONCERN

Vehicles and equipment may be stored onsite to support various County operations (e.g., construction, maintenance, snow removal, roadside assistance, mass transit, mowing, etc.). Examples of County owned and operated vehicles and equipment stored onsite at any given time include but are not limited to, the following: cars, trucks, buses, emergency response vehicles, garbage trucks, heavy equipment (backhoes, frontend loaders, etc.), forklifts, towable generators, portable light stands, and roadside equipment. Vehicle and equipment storage is considered a pollutant source due to the potential for incidental releases of petroleum products, lubricants, and various automotive fluids.

POLLUTION PREVENTION MEASURES

1) When possible/practical, store vehicles and equipment inside or under cover to prevent exposure to precipitation.
2) If vehicles or equipment must be stored outside, store vehicles/equipment in designated areas away from areas of concentrated runoff, storm drains, and other stormwater conveyances.
3) Vehicles and equipment shall be staged on impervious (asphalt or concrete) surfaces;
4) Keep truck beds clean and ensure potential stormwater pollutants are stored in closed containers, covered, or otherwise protected from stormwater exposure.
5) Conduct routine visual inspections of vehicles and equipment for the presence of leaks and respond accordingly.
6) Leaking vehicles/equipment should be moved inside or under cover. At a minimum, drip pans or absorbent pads shall be used to contain the leak until the vehicle/equipment can be relocated and the leak addressed.
7) Drain all fluids from wrecked or heavily damaged vehicles and equipment before storage.
8) Have an adequate supply of appropriate spill response equipment readily available and clean up all spills and leaks immediately utilizing dry cleaning techniques (e.g. absorbents and brooms).
9) Train staff in spill response so that incidents are addressed in a timely fashion.
10) Do not wash down areas where leaks have collected on ground surfaces; use dry cleaning methods such as granular absorbents and brooms.

VEHICLE AND EQUIPMENT REFUELING

Not Applicable ☐ Applicable ☒

CONCERN

Refueling activities associated with County vehicles and equipment can result in a discharge of fuel (gasoline and diesel fuel), which has the potential to enter the storm drain system and/or a nearby waterway. Such releases can introduce hydrocarbons, metals, and other toxic chemicals to stormwater runoff.

POLLUTION PREVENTION MEASURES

General Procedures *(applicable to all refueling activities)*

1) Routinely *(at least daily)* inspect the fuel dispensing area for any spills or leaks.
2) Routinely inspect fuel dispensing equipment looking for leaking or damaged equipment. Damaged or malfunctioning equipment shall be taken out of service until it has been repaired.
3) Fuels will only be dispensed into authorized vehicles, equipment, and approved containers.
4) Vehicle operators must remain outside of their vehicles and in attendance of fuel dispensers at all times while dispensing fuel.
5) Third-party contractors must be trained in proper refueling procedures and pollution prevention.
6) Do not utilize a foreign object to keep the dispenser nozzle in the open position. If present, a "hold-open" latch on the nozzle may be used.
7) Do not "top off" a vehicle's fuel tank once the dispenser nozzle's automatic shut-off has been activated. Topping off tanks may result in spills. Post signs in fueling areas warning vehicle operators against "topping off" of vehicle fuel tanks.
8) After refueling has stopped, allow several seconds to pass before removing the nozzle and returning it to the dispenser. This will prevent incidental dripping from the nozzle.
9) Employees refueling vehicles shall note the location of the "Emergency Fuel Shut Off" switch, to be used to stop the flow of fuel to the dispensers in the event of a release or emergency.
10) Have an adequate supply of appropriate spill response equipment readily available and clean up all spills immediately utilizing dry cleaning techniques (e.g. absorbents and brooms).
11) Immediately clean up and dispose of used absorbent material.
12) Do not wash down fueling areas; use dry cleaning methods such as granular absorbents and brooms.
13) Conduct refueling activities over impervious (e.g. concrete) surfaces. Place drip pans or absorbent pads under the nozzle if fueling occurs over a permeable surface such as grass or soil.
14) Install oil control devices in storm drains that may receive contaminated runoff from fueling areas.
15) Cover fueling areas with a canopy or roof to prevent direct contact with rainfall. Direct run-on away from fueling areas and collect fueling area run-off in a dead-end sump or oil-water separator.

Mobile Equipment Refueling

1) Refuel equipment on an impervious surface, downgradient of, and at the farthest practical distance from any storm drain, stormwater conveyance, stormwater management feature, or waterway.
2) Utilize secondary containment when refueling equipment (when practical).
3) Ensure mobile refuelers are parked in designated locations and away from areas of concentrated run-off, storm drains, and other stormwater conveyances.
4) Ensure that procedures are in place and that staff is properly trained in spill response/cleanup so that leaks and spills are addressed appropriately and promptly.

BMP Fact Sheet

VEHICLE MAINTENANCE

GH-04

Not Applicable ☒ Applicable ☐

CONCERN

Vehicle and equipment maintenance can impact the water quality of nearby waterways by exposing stormwater to various pollutants including petroleum hydrocarbons, solvents, antifreeze/coolants, used oil, lubricating oil, grease, brake fluid, metals, and various chemicals. Additionally, vehicles that are wrecked or awaiting repair can be a source of pollution if leaking fluids are not properly controlled.

POLLUTION PREVENTION MEASURES

1) Conduct vehicle and equipment maintenance activities indoors.
2) Make sure incoming vehicles and equipment are inspected for leaking fluids and oil.
3) Move leaking vehicles or equipment indoors or under cover as soon as possible. At a minimum, a drip pan or absorbent pads shall be utilized to contain the leak until the vehicle/equipment can be relocated and the leak addressed.
4) Avoid performing maintenance on vehicles in close proximity to exterior doorways, which may allow released fluids to migrate outdoors.
5) Have an adequate supply of appropriate spill response equipment readily available and clean up all spills and leaks immediately utilizing dry cleaning techniques (e.g. absorbents and brooms).
6) Keep maintenance areas neat and well organized. Remove dirt, debris, and used absorbent regularly.
7) Inspect maintenance areas as well as maintenance equipment on a routine basis.
8) Store vehicles, parts, and generated wastes indoors or off the ground and under cover whenever possible. When practical, provide secondary containment.
9) Promptly transfer used fluids to the proper waste container; do not leave full drip pans or other open containers around the shop. Empty and clean drip pans and containers regularly.
10) Waste liquids shall not be poured into floor drains, sinks, outdoor storm drain inlets, or other storm drains or sewer connections. Liquid wastes are to be collected in properly labeled containers and disposed of by a licensed waste hauler or other appropriate method.
11) Store leaking batteries in a sealed container and provide secondary containment, if feasible.
12) Clean all parts indoors utilizing a self-contained parts washer.
13) Do not hose down indoor service areas to storm drains or areas where it can seep into groundwater.
14) Maintain floor drains in good working order and inspect for proper function on a routine basis. Consider plugging floor drains that discharge to the storm sewer.
15) Ensure oil/water separators (if present) are maintained in proper working order and are checked on a routine basis for the presence of oil.
16) If maintenance work must be performed outdoors, adhere to the following requirements:
    - Conduct maintenance activities over an impervious surface, away from stormwater inlets.
    - Cover outdoor maintenance areas and direct stormwater run-on away from the area.
    - Use drip pans or drop cloths underneath the equipment to catch leaks and drips.
    - Have an adequate supply of appropriate spill response equipment readily available.
    - Clean all spills immediately using dry cleaning techniques (e.g. absorbents and brooms).
    - Avoid performing maintenance activities during precipitation events.
    - Limit temporary outdoor maintenance activities to a single shift/day if additional time is needed to cover the work area at the end of each day/shift.

VEHICLE AND EQUIPMENT WASHING

Not Applicable ☒ Applicable ☐

CONCERN

Vehicle and equipment washing can generate washwater that contains oil, grease, organic compounds, surfactants, phosphates, metals, and suspended solids. If vehicles/equipment are washed outdoors on impervious surfaces, dirty washwater can contaminate stormwater that ends up in waterways. Washing equipment over pervious surfaces can allow washwater to seep into the ground contaminating groundwater.

POLLUTION PREVENTION MEASURES

1) Vehicle and equipment washing should only be conducted in designated indoor wash bays that capture and recycle washwater to the extent practical.
2) Wastewater from the washing facility should be discharged to the sanitary sewer system under the authorization of a wastewater discharge permit issued by the local municipal authority.
3) The floor of indoor vehicle wash bays should be completely bermed or sloped to collect wash water and prevent migration outdoors.
4) No other activities (e.g., fluid changes, repairs, material storage) shall be performed in wash areas.
5) Keep the wash bay neat and well organized. Sweep or pick up all trash and debris daily or as needed.
6) Solid materials accumulated on vehicles or in vehicle beds (e.g. salt, soil, grass, etc.) shall be knocked off or otherwise removed from the vehicle (while inside the wash bay) prior to washing. Solid materials shall be collected and disposed of properly.
7) For vehicles too large to completely fit in the wash bays, only the portion of the vehicle physically located in the confines of the wash bay shall be cleaned. The vehicle shall then be rotated to allow for the remaining portion of the vehicle to be washed.
8) Use nozzles that automatically turn off water when not in use and consider high-pressure, low-volume sprays.
9) Avoid detergents as much as possible. If detergents are necessary, use a biodegradable, phosphate-free detergent.
10) If discharging to an oil-water separator, use a non-emulsifying detergent.
11) Inspect floor drain systems, holding tanks, and conveyances associated with designated wash areas regularly. Maintain oil/water separators and/or process flowthrough separators on a routine basis.
12) Use commercial car washes when vehicle or equipment washing cannot be performed onsite without causing impacts to stormwater.
13) If washing must occur onsite and outdoors, use a designated impervious area that is marked with posted signs indicating proper washing procedures. This area must be bermed to contain the wash water and graded to direct the wash water to the sanitary sewer, an oil-water separator, a holding tank, a dead-end sump, or other containment area. Captured water shall be disposed of properly.
14) Avoid steam cleaning and engine/undercarriage washing which can produce high pollutant concentrations. If steam cleaning or engine washing is necessary, perform such cleanings within isolated indoor areas, and ensure wash water is treated and discharged to the sanitary sewer (if permitted to do so) or captured for off-site disposal.
15) Train staff in proper washing techniques and how to confine washing to designated wash areas.
16) Consider alternatives to washing such as using air to blow grass and debris from small equipment, wet-wiping equipment with rags, etc.

BMP Fact Sheet

MATERIAL STORAGE

GH-06

Not Applicable ☒ Applicable ☐

CONCERN

The storage of petroleum products, chemicals, paints, cleaners, pesticides, fertilizers, bags of erodible materials like sand, cement, and soil, and other potential pollutants can negatively impact surface waters through the accidental releases or leaching of materials into stormwater. Unprotected outdoor storage areas can generate a wide range of stormwater pollutants, such as sediment, nutrients, toxic materials, and petroleum products.

POLLUTION PREVENTION MEASURES

1) Whenever possible, store containers (e.g. drums, bins, bags, cans, and totes) indoors or under cover to limit exposure to stormwater.
2) Designate specific areas for material delivery and storage that are away from heavy traffic areas, storm drains, stormwater conveyances, and areas of concentrated run-off.
3) Designated outdoor storage areas should be paved or consist of an impervious surface.
4) Provide secondary containment for materials whenever possible or required per regulation.
5) Store materials on pallets to prevent stormwater run-on from coming into contact with materials, prevent container corrosion, and allow for better leak detection. Pallets must be in good condition and promptly replaced once damaged or deteriorated.
6) Stack containers according to the manufacturer's recommendations to avoid damage.
7) Immediately replace damaged, corroded, or leaking containers.
8) Ensure all storage containers are clearly labeled with their contents.
9) Keep containers tightly sealed after use.
10) Maintain an accurate inventory of hazardous substances and limit on-site storage to that which is necessary to support facility operations.
11) Keep storage areas neat and well organized; remove debris and unneeded material promptly.
12) If empty drums are stored outdoors, ensure that all openings are equipped with caps to prevent water intrusion and that the drum/storage area is labeled "Empty Drums".
13) Have an adequate supply of appropriate spill response equipment readily available and clean up all spills and releases immediately utilizing dry cleaning techniques (e.g. sweeping/absorbents).
14) Clean up all migrating dry materials upon discovery and address the source of the release.
15) Provide perimeter controls (e.g., berms, rock check dams, etc.) for erodible stockpiles of materials such as mulch, sand, and gravel to prevent migration into the stormwater system.
16) Routinely inspect material storage areas for leaks, material migration, and damaged or corroded containers. Ensure that secondary containment and other perimeter controls are in satisfactory condition.
17) Additional visual inspections of outdoor storage areas should be conducted after significant rainfall events (i.e., greater than 0.5 inches).

BMP Fact Sheet

ABOVEGROUND STORAGE TANKS

GH-07

Not Applicable ☐ Applicable ☒

CONCERN

Aboveground storage tanks (ASTs) may be used to store fuels, automotive fluids, chemicals, or deicing fluids. Leaks from tanks, piping, or other equipment and releases during fluid transfers can all impact stormwater quality. It is critical to maintain ASTs in good working condition to prevent spills and/or releases from occurring. Improperly managed storage tanks can cause significant environmental impacts.

POLLUTION PREVENTION MEASURES

General *(applicable to all storage tanks)*

1) ASTs should be installed and maintained in accordance with COMAR 26.10 and applicable fire codes.
2) ASTs should be provided with secondary containment, whenever feasible or required by regulation.
3) Secondary containment areas shall be maintained clean and dry; drain valves must be kept closed; accumulated liquid shall only be discharged if there are no visible signs of impacts, and in accordance with applicable regulations.
4) Inspect ASTs monthly to identify any leaking or malfunctioning equipment and ensure tanks are functioning as designed.
5) ASTs shall be equipped with a form of liquid-level detection (i.e. sight gauge, electronic monitoring).
6) ASTs shall be equipped with overfill prevention (i.e. overfill alarm and/or overfill prevention valve).
7) Tanks and piping should be protected from vehicle impact via barriers, bollards, guard rails, etc.
8) Install ASTs on solid foundations over impervious surfaces, and away from areas of concentrated run-off, storm drains, and other stormwater conveyances.
9) Properly label all storage tanks (e.g., contents, capacity, etc.).
10) Keep remote fills and fill port spill buckets clean and dry.
11) Keep fill ports, gates, and tank areas secured when not in use to prevent fuel theft and tampering.
12) Have an adequate supply of appropriate spill response equipment readily available and clean up all spills and leaks immediately utilizing dry cleaning techniques (e.g. absorbents and brooms).
13) Facilities that maintain 1,320 gallons or more of aboveground oil products shall prepare and implement a Spill Prevention, Control, and Countermeasure (SPCC) Plan, per 40 CFR 112.
14) Facilities that maintain 1,000 gallons or more of used oil or 10,000 gallons or more of virgin oil in ASTs shall obtain an Individual Oil Operations Permit from the MDE, per COMAR 26.10.01.09.
15) Owners/Operators of facilities that maintain more than 2,500 gallons of oil in ASTs are required to register each AST with MDE, per COMAR 26.10.01.10.

Bulk Fluid Transfers (Deliveries)

1) All bulk fluid transfer operations shall be performed under the direct supervision of knowledgeable County personnel. At no time shall the delivery vehicle or delivery vehicle operator be unsupervised.
2) The product level within the tank must be measured and available capacity verified before delivery.
3) Deliveries shall be made via fill ports equipped with catch basins to capture drips and spills.
4) Ensure an adequate supply of appropriate spill response equipment is readily available.
5) Post signs in delivery area displaying proper delivery procedures and emergency contact information.

ABOVEGROUND STORAGE TANKS

Used Oil Tanks

1) County personnel must verify the level of product in used oil tanks prior to filling.
2) Used oil tanks should only be filled via designated fill ports. Pumping used oil into the tank via a closed piping system is preferred to manually pouring used oil into the tank.

Brine Tanks

1) If multiple tanks are located onsite, the tanks should be plumbed to ensure that the complete failure of one tank will not drain all the tanks in the system (tanks must be isolated).
2) Minimize seeping and leaking at fittings by properly supporting piping and fittings, using flexible connectors or hoses to reduce stress, and installing corrosion-resistant fittings.
3) Consider placing hoses in non-permeable trenches or using drip-less nozzles to reduce repeated small spills.

RESIDENT DROP-OFF CENTER

GH-08

Not Applicable ☒ Applicable ☐

CONCERN

Resident Drop-Off Centers are publicly accessible facilities where residents can drop off used automotive fluids (i.e. oil or antifreeze), municipal waste, recyclable, and/or organic waste, typically free of charge. Improper transfer or management of the waste materials can allow a number of pollutants including oils and greases, toxic and chemical compounds, nutrients, metals, and other wastes to enter waterways.

POLLUTION PREVENTION MEASURES

General *(applicable to all materials collected)*

1) Clearly identify waste materials accepted by the facility, and clearly mark designated collection areas.
2) Waste material should be inspected by a County representative, prior to disposal.
3) Avoid positioning waste receptacles near storm drains, water bodies, or areas of concentrated runoff.
4) When practical, receiving areas should be covered.
5) Do not allow containers to overflow or waste materials to accumulate on the ground.

Automotive Fluid Collection

1) Used oil, antifreeze, and automotive fluid receiving areas should be on impervious surfaces, covered, and provided with secondary containment, which shall be maintained clean and dry.
2) Provide lidded waste receptacles in the receiving area for the public to dispose of empty containers. Waste receptacles shall be emptied routinely and waste disposed of properly.
3) Collection areas shall be inspected daily and all trash and spilled liquids appropriately cleaned up.
4) The available capacity of waste liquid collection containers shall be routinely verified and waste removals scheduled, as needed.
5) Install appropriate controls to prohibit the overfilling of waste fluid collection containers.
6) Place appropriate spill response equipment in close proximity to drop-off areas.
7) If aboveground tanks are used to collect waste fluids, refer to BMP Fact Sheet GHP-07 (Aboveground Storage Tanks) for additional recommendations.

Organic Debris Collection

1) Routinely transfer collected organic debris/waste to a composting or disposal facility.
2) Do not permit composting of organic waste except at properly designed and permitted facilities.
3) Enact controls to prevent leaves and other windblown debris from entering stormwater inlets.

Municipal Waste / Recyclables Collection

1) Refer to BMP Fact Sheet GHP-01 (Waste Management) for additional recommendations.

BMP Fact Sheet

STOCKPILES

GH-09

Not Applicable ☒ Applicable ☐

CONCERN

The County may stockpile various erodible materials, the type of material can vary depending on the needs of the County. Stockpiled material may include soil, sand, millings, slag, cinders, sawdust, landscaping bark, compost, etc. Exposed stockpiles can easily erode due to wind or precipitation and contribute suspended solids to stormwater runoff.

POLLUTION PREVENTION MEASURES

1) Maintain stockpiles of erodible materials within roofed storage buildings or covered storage bins, if feasible. If not, stockpile material on an impervious surface and cover the stockpile.
2) Temporary stockpiles should be placed on an impermeable membrane (tarp) for quick clean-up.
3) Locate stockpiles away from drain inlets, catch basins, swales, areas of concentrated stormwater flow, water bodies, and environmentally sensitive areas.
4) Divert stormwater flows away from/around the stockpiles using a diversion device (e.g., temporary swale, berm, sandbags, or diversion fence).
5) Cover temporary stockpiles of erodible materials with a tarp that has been adequately secured. The covers must be in place at all times when the stockpile is not in active use.
6) When accessing a portion of the stockpile, only remove a section of the cover to minimize exposure to the elements.
7) Use barriers to isolate stockpiled materials from high-traffic areas to prevent tracking of materials.
8) Sweep (do not wash or hose down) in front of material stockpile storage areas at regular intervals, following loading and unloading activities, and during times of heavy use.
9) If material is observed migrating from the stockpile, clean up all migrated material upon discovery and provide additional controls to reduce migration from the stockpile. If such measures are ineffective implement controls to capture pollutants before they migrate off-site (e.g. silt fencing, inlet filters, filter socks, at-grade inlet protection, etc.).
10) Minimize material stockpile inventory based on historical inventory/usage records and public safety operational needs.
11) Cold mix asphalt shall be stored on and covered with plastic sheeting or comparable material.
12) Routinely inspect outdoor material stockpiles to verify existing controls are functioning properly and for signs of erosion or material transport.

BMP Fact Sheet

DEICING MATERIALS

GH-10

Not Applicable ☒ Applicable ☐

CONCERN

When salt and other de-icing materials are stored outside and uncovered, they have a much higher risk of being eroded and transported offsite by stormwater. Improper de-icing material and sand storage may result in stormwater runoff containing elevated concentrations of sodium chloride and dissolved solids. Sodium chloride (e.g., road salt) is an effective deicer but can be highly corrosive to stormwater facilities. Smaller waterways are at a higher risk to increases in salinity, which can threaten aquatic species. Additionally, runoff containing sodium chloride has the potential to reach drinking water sources where small traces can adversely impact public health.

POLLUTION PREVENTION MEASURES

1) Bagged de-icing chemicals must be stored indoors. If stored outdoors bags must be kept on pallets (off the ground) and covered at all times. Bags must be intact without holes or openings.
2) Bulk de-icing materials shall be stored under cover and on an impervious surface.
3) Bulk salt storage areas/buildings shall not be overfilled so that salt spills out beyond the entrance of the storage area/building.
4) Bulk salt storage areas/buildings shall be maintained in a structurally sound condition and in a way that prevents the release of salt and the infiltration of stormwater. Deicing materials should not touch the sides of metal storage containers.
5) Barriers such as berms, gates, knee walls, tarps, and/or straw bales shall be placed at the entrances of bulk salt storage areas/buildings to prohibit the migration of salt and prevent contact with precipitation/stormwater runoff.
6) Routinely inspect storage areas for migrating materials or deterioration of containment structures. Sweep up all migrating materials upon discovery and repair the source of the migrating pollutant.
7) Loading areas should be constructed of impervious material and covered or enclosed, to the extent practical, to reduce potential contact with stormwater.
8) Minimize the distance de-icing materials are transported during loading/unloading activities.
9) Prevent and/or minimize the spillage of salt and de-icing materials during loading/unloading activities, immediately clean spilled or tracked materials.
10) Sweeping of storage and loading/unloading areas shall be conducted immediately following loading/unloading activities.
11) Do not store de-icing materials (bulk or bagged) over or immediately adjacent to drains or waterways.
12) Control site drainage by diverting stormwater run-on away from storage/loading areas using appropriate measures (e.g., curbing, berms, etc.).
13) Slope storage/loading areas to direct salt-contaminated runoff to an appropriate collection area, and in a manner that prevents the runoff from reaching adjacent soil or surface waters.
14) Excess salt shall be removed from salt handling equipment (trucks, spreaders, etc.) following use/prior to storage. All cleaning shall occur on an impervious surface, which is sloped or curbed to contain any washwater and direct it to a collection area for recycling or proper disposal.

Appendix A

GHP Site Inspection Checklist

GOOD HOUSEKEEPING PLAN (GHP)
SITE INSPECTION CHECKLIST

Facility Name: _____ **Inspection Date:** _____

Inspector Name: _____ **Inspector Signature:** _____

- The intent of this inspection is to ensure that the site is being properly maintained and that there are no visible signs of pollutants entering the stormwater system.
- **A shaded status box designates an item in a non-compliant status. Please provide an explanation for all non-compliant items and subsequently document all corrective actions performed.**
- Retain the completed checklists for five (5) years.

Item	Status			CORRECTIVE ACTIONS/COMMENTS *Items which cannot be corrected immediately must be reported to the GHP/NPDES Program Manager*
	Yes	No	N/A	
GENERAL HOUSEKEEPING				
1. Are exterior areas of the facility free of accumulated trash, debris, and unneeded materials?				
2. Are stormwater drains and inlets free from debris, sediment, and evidence of spills/releases?				
3. Is the facility free from signs of erosion?				
4. Are paved surfaces free of accumulated sediment?				
5. Is spill response equipment available in maintenance areas, fueling areas, hazardous material storage areas, and/or other required areas?				
6. Are spill kits and absorbent materials clearly labeled and accessible (i.e. items are not piled on top of or in front of spill kits)?				
7. Are spill kits secured from being stolen or misused?				
8. Is there a labeled container present for the disposal of used spill cleanup material?				

GOOD HOUSEKEEPING PLAN (GHP)
SITE INSPECTION CHECKLIST

Item	Status			CORRECTIVE ACTIONS/COMMENTS *Items which cannot be corrected immediately must be reported to the GHP/NPDES Program Manager*
	Yes	No	N/A	
9. Does spill response equipment (i.e. spill kits, absorbent materials) need to be replenished?				
WASTE MANAGEMENT				
10. Are areas around solid waste containers/roll-offs/compactors free of excessive trash accumulation or overflowing containers?				
11. Are areas around solid waste containers/roll-offs/compactors free of visible evidence (i.e. leaks, staining) of ongoing stormwater pollution?				
12. Are scrap metal containers in good order and free from evidence of leaking oil/grease?				
13. For dumpsters, roll-offs, and other waste receptacles, where leaks are observed, have appropriate controls (e.g. containment, spill response, etc.) been enacted?				
14. Are the lids (if present) to solid waste containers closed?				
15. Is street sweeping/vactor waste being managed appropriately (i.e. no evidence of material migration)?				
16. Is waste cooking grease managed appropriately (i.e. no evidence of spilled material or excessive staining)?				
VEHICLE & EQUIPMENT STORAGE				
17. Are stored vehicles/equipment free from leaks?				
18. If leaks are present, are they being managed appropriately (drip pan or other methods in place to capture released liquids)?				
19. Are storage areas free of visible evidence of chronic leaks/spills (i.e. significant staining)?				

GOOD HOUSEKEEPING PLAN (GHP)
SITE INSPECTION CHECKLIST

Item	Status			CORRECTIVE ACTIONS/COMMENTS *Items which cannot be corrected immediately must be reported to the GHP/NPDES Program Manager*
	Yes	No	N/A	
VEHICLE & EQUIPMENT REFUELING				
20. Are the areas around refueling areas free from evidence of spills or leaks?				
21. Are refueling areas free of used absorbent material that has not been swept/cleaned up?				
22. Do fuel dispensers and hoses appear to be in good working order and well-maintained?				
VEHICLE MAINTENANCE				
23. Is there any indication that vehicle maintenance activities are being conducted outdoors?				
24. Is there any indication that vehicle maintenance activities are contributing to stormwater pollution?				
VEHICLE & EQUIPMENT WASHING				
25. If performed on-site, does all vehicle/equipment washing occur indoors?				
26. Is wash water collected and disposed of properly?				
27. Is there any indication that vehicle/equipment wash water is being released to stormwater conveyances or pervious areas?				
MATERIAL STORAGE				
28. Are all outdoor storage areas free from visible signs of leaks or spilled material?				
29. Are material storage containers in good condition?				

GOOD HOUSEKEEPING PLAN (GHP)
SITE INSPECTION CHECKLIST

Item	Status			CORRECTIVE ACTIONS/COMMENTS *Items which cannot be corrected immediately must be reported to the GHP/NPDES Program Manager*
	Yes	No	N/A	
30. Are drums, totes, and other containers (that are <u>not</u> empty) stored off the ground and covered, or stored indoors?				
31. Are liquid-containing drums/totes located outdoors provided with secondary containment?				
32. Are containers that are located outdoors equipped with closed lids except when material transfers are occurring?				
33. Are materials, which could impact stormwater, stored away from heavy traffic areas, or protected from vehicle collisions?				
34. Are chemical storage containers properly labeled?				
35. If empty drums are stored outside, are all openings equipped with caps to prevent water intrusion?				
ABOVEGROUND STORAGE TANKS				
36. Are all storage tanks, and surrounding areas free from visible signs of leaks or spilled material?				
37. Do storage tanks appear to be in good working order (e.g. free of obvious signs of damage or malfunctioning equipment)?				
38. Are remote fills associated with tanks free of liquid and debris?				
RESIDENT DROP-OFF CENTERS				
39. Are waste collection areas clearly identified?				
40. Are used oil/antifreeze collection tanks, containment structures, and surrounding areas free from visible signs of leaks or spilled material?				

GOOD HOUSEKEEPING PLAN (GHP)
SITE INSPECTION CHECKLIST

Item	Status			CORRECTIVE ACTIONS/COMMENTS *Items which cannot be corrected immediately must be reported to the GHP/NPDES Program Manager*
	Yes	No	N/A	
41. Do used oil/antifreeze collection tanks appear to be in good working order (e.g. free of obvious signs of damage or malfunctioning equipment)?				
42. Are empty used oil/antifreeze containers being collected and disposed of in the trash?				
43. Are areas around waste/recyclables containers free of excessive trash accumulation or overflowing containers?				
44. Are areas around waste/recyclables containers free of visible evidence (i.e. leaks, staining) of ongoing stormwater pollution?				
45. Are organic debris collection areas free of visible evidence of ongoing stormwater pollution (e.g. leaves and debris in stormwater conveyances)?				
STOCKPILES				
46. Are material piles, including salt, soil, sand, and millings isolated (i.e. covered, bermed, etc.) to prevent stormwater run-on and run-off?				
47. Are areas surrounding material piles (e.g. salt, soil, sand, millings, etc.) free of tracked or migrated material?				
DEICING MATERIALS				
48. Are all deicing materials stored indoors or undercover?				
49. Are salt storage structures in good condition (e.g. no evidence of material escaping or stormwater infiltration)?				
50. Is the salt loading area clean?				

GOOD HOUSEKEEPING PLAN (GHP)
SITE INSPECTION CHECKLIST

Item	Status			CORRECTIVE ACTIONS/COMMENTS *Items which cannot be corrected immediately must be reported to the GHP/NPDES Program Manager*
	Yes	No	N/A	
51. If deicing materials are tarped, is the tarp secure and covering the entire pile?				
52. Are bags of salt stored indoors, or off the ground and covered?				

ADDITIONAL COMMENTS:

Appendix B

GHP Stormwater Conveyance System Inspection Checklist

GOOD HOUSEKEEPING PLAN (GHP)
STORMWATER CONVEYANCE SYSTEM INSPECTION CHECKLIST

Facility Name: _____ **Inspection Date:** _____

Inspector Name: _____ **Inspector Signature:** _____

- The intent of this inspection is to ensure the free flow of stormwater within on-site conveyance systems and prevent damage/flooding.
- **If maintenance is needed, please provide an explanation, and document all corrective actions performed.**
- **Inspections shall include visually accessible infrastructure only; at no time shall inspection personnel enter a confined space.**
- Retain the completed checklists for five (5) years.

Item	Item Checked (Y/N/NA)	Maintenance Needed (Y/N)	CORRECTIVE ACTIONS/COMMENTS *Items which cannot be corrected immediately must be reported to the GHP/NPDES Program Manager*
CATCH BASINS / INLETS			
1. Look for debris and sediment blocking catch basin grates. If found, remove.			
2. Look for damage or cracks to the frame, grate, basin walls or bottom. If found, schedule repairs or replacement.			
3. Look for sediment and debris in the catch basin sump. If sediment fills 60% of the sump or comes within 6” of a pipe it should be scheduled for cleaning.			
4. If any type of filtering device is present, verify that the filter is not clogged, torn, or damaged; clean if clogged, replace if damaged.			
PIPES / CULVERTS			
5. Look for evidence of clogged piping (e.g. visual obstructions, standing water within manholes/inlets structures, etc.). If found, remove or schedule cleaning.			
6. Verify vegetation growth, if present, does not impede water flow. If it does, mow, cut back, or remove.			

GOOD HOUSEKEEPING PLAN (GHP)
STORMWATER CONVEYANCE SYSTEM INSPECTION CHECKLIST

Item	Item Checked (Y/N/NA)	Maintenance Needed (Y/N)	CORRECTIVE ACTIONS/COMMENTS *Items which cannot be corrected immediately must be reported to the GHP/NPDES Program Manager*
7. Inspect for damaged piping, inlets, outlets, headwalls, wingwalls, or excessive erosion. If found, make or schedule repairs.			
DITCHES / TRAPEZOIDAL SWALES			
8. Check for erosion, slumping, or undercutting. If found, make or schedule repairs.			
9. Look for trash and sediment accumulation. Remove all trash and remove sediment if it will impede water flow or clog downstream structures.			
10. Verify vegetation growth does not impede water flow. If it does, mow, cut back, or remove. Remove any trees or shrubs growing within the ditch.			
11. Check the integrity of check dams, filter socks, or other flow dissipation/filtering devices within the ditch or swale. Perform or schedule service if they are clogged, damaged, or deteriorated.			
12. Check inlets and outlets for debris accumulation, damage, or erosion. If found, make or schedule repairs.			

ADDITIONAL COMMENTS:

GUIDANCE DOCUMENT
GOOD HOUSEKEEPING PLAN - STORMWATER CONVEYANCE INSPECTIONS

INTRODUCTION

Maintaining catch basins, stormwater inlets, and other stormwater conveyance structures on a regular basis will remove pollutants, prevent backups, and ensure the system functions as intended to avoid flooding.

Each GHP-covered facility is required to conduct routine stormwater conveyance system inspections to ensure the free flow of stormwater within the conveyance system(s). The GHP includes a *"GHP Stormwater Conveyance System Inspection Checklist"*, to be used when completing the required inspections. This document provides additional background and guidance to aid facility personnel in completing the inspections.

CATCH BASINS / INLETS

Catch basins and inlets are all points for stormwater to enter storm drain systems. These structures are typically part of a larger conveyance system with many interconnected components where the impairment of one component can compromise the functionality of the larger system. Inlets and catch basins are subject to functional impairment by a variety of conditions, including:

- Structural damage including from vehicles and plows
- Cracks/joint separation at piping (inlet and outlet) connections
- Leaking due to cracks and joint separation
- Missing or damaged grates and grate frames
- Corrosion
- Blockage caused by debris, sediment, vegetation, or other objects

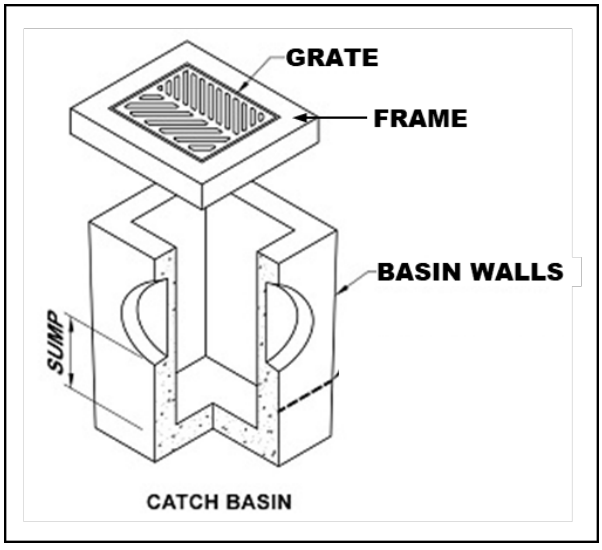

Figure 1 – Catch Basin Diagram

The following photos provide additional information related to the various inspection items, including examples of typical issues that may be encountered. The photo numbers correspond to the inspection checklist item number.

Inspection Item #1 [1]



Debris and sediment blocking inlet/catch basin grate.

Inspection Item #2 [2]



Damaged Grate

Inspection Item #2 [3]



Damaged Frame

Inspection Item #2 [4]



Failing brick walls with a stormwater inlet.

Inspection Item #2 [5]



Failing asphalt surrounding the inlet

[1] Grand Valley State University - https://www.gvsu.edu/groundswell/clogged-storm-drains-71.htm
[2] Georgia Department of Transportation – Stormwater System Inspection and Maintenance Manual, March 2020
[3] https://catchbasinauthority.ca/catch-basin-101/
[4] https://www.fixasphalt.com/catch-basin-repairs
[5] https://ccpia.org/catch-basin-and-manhole-inspections/

Inspection Item #3 [6]



Sediment and debris inside stormwater inlet

Inspection Item #3

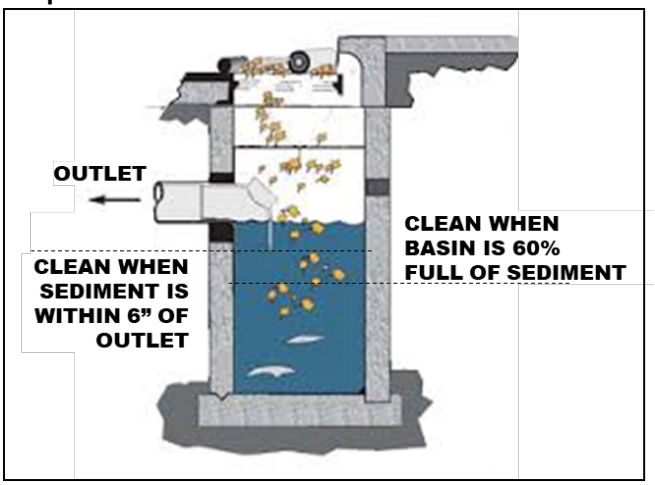

Remove sediment from a catch basin if it fills 60% of the sump or comes within 6" of a pipe.

Inspection Item #4 [7]



Example of inlet filter. Replace when filled or damaged.

Inspection Item #4 [8]



Example of an inlet filter sock, replace if damaged.

PIPES AND CULVERTS

Pipe systems are designed to convey stormwater runoff safely and effectively from inlets to various discharge points and outfalls. A culvert is a structure that channels water under an obstacle such as a roadway or railroad. These structures are subject to functional impairment by a variety of conditions, including:

- Blockage or obstruction due to build up of vegetation, debris, sediment, or other objects
- Cracks and/or joint separation
- Collapsed pipe
- Corrosion
- Root intrusion
- Lack of stabilization

[6] https://www.fixasphalt.com/catch-basin-repairs
[7] https://store.interstateproducts.com/products/Ultra-Drain-Guards/Ultra-Drain-Guard-Adjustable-Frame-Model
[8] https://www.newpig.com/pig-sediment-filter-sock/p/FLT787

Inspection Item #5 [9]



A pipe filled with sediment, inhibiting flow.

Inspection Item #5 [10]



Standing water around an inlet may indicate a blockage.

Inspection Item #6 [11]



Pipe conveyance filled with vegetation.

Inspection Item #7 [12]

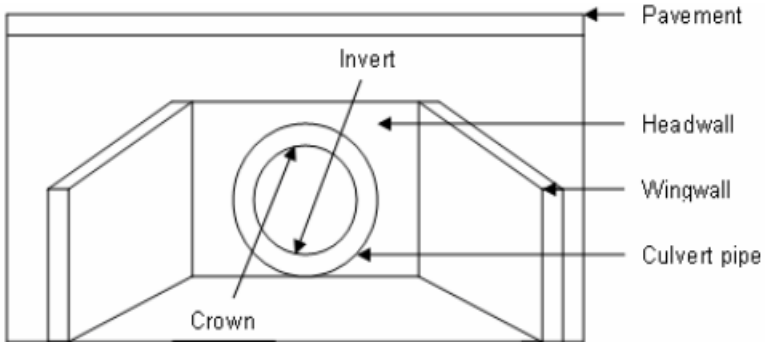

Diagram depicting various components of a culvert.

[9] Georgia Department of Transportation – Stormwater System Inspection and Maintenance Manual, March 2020
[10] https://www3.epa.gov/region9/water/npdes/stormwater-feature.html
[11] Georgia Department of Transportation – Stormwater System Inspection and Maintenance Manual, March 2020
[12] https://www.researchgate.net/figure/Components-of-a-Culvert_fig34_228685906

Inspection Item #7 [13]



A crack is the culvert headwall.

Inspection Item #7 [14]



Evidence of erosion around a culvert.

DITCHES AND SWALES

Ditches and swales serve similar functions. Both are used to convey stormwater. However, there are slight differences. A ditch is a narrow channel typically found along roads and at the edges of parking lots/driveways. A swale is like a ditch, but it is broad and shallow, and usually covered or lined with turfgrass or stone. Issues associated with these structures, which could impede their function include:

- Blockage or obstruction due to vegetation, debris, sediment, or other objects
- Erosion
- Rapidly moving water
- Lack of adequate vegetative cover for grass-lined channels

Inspection Item #8 [15]



Erosion and slumping within a drainage ditch.

Inspection Item #8 [16]



Slumping within a drainage swale.

[13] https://www.sbt-durabi.org/articles/xml/ARN0/
[14] https://lufkindailynews.com/news/local/culverts-crumbling-in-precinct-1/article_a9fed902-4379-5248-ab11-7471e2974298.html
[15] https://graniteseed.com/blog/how-to-stop-a-ditch-from-eroding/
[16] https://www.mnwcd.org/erosion-control

Inspection Item #9 [17]



Litter and debris within a ditch.

Inspection Item #9 [18]



Litter and debris within a swale.

Inspection Item #10 [19]



Cracks and joint separation in concrete channels, removal of vegetation may prevent future damage.

Inspection Item #11 [20]



Rock check dam across a channel.

Inspection Item #11 [21]



Filter sock check dams across a grass swale.

[17] https://craven.ces.ncsu.edu/2023/02/for-those-who-love-to-litter/
[18] https://www.cityoftulsa.org/government/departments/public-works/stormwater-quality/adopt-a-stream/
[19] Georgia Department of Transportation – Stormwater System Inspection and Maintenance Manual, March 2020
[20] EPA Stormwater Best Management Practice, Check Dams, December 2021
[21] EPA Stormwater Best Management Practice, Check Dams, December 2021

Inspection Item #12 [22]



Inlet to a rock-lined swale.

Inspection Item #12 [23]



Sediment accumulation at swale inlet.

END OF DOCUMENT

[22] https://www.stormwater.com/erosion-control/vegetation-management/article/13016118/inlet-protection-during-constructionand-after

[23] https://www.stormwater.com/erosion-control/vegetation-management/article/13016118/inlet-protection-during-constructionand-after

Appendix C

General Spill Response Procedures

SPILL RESPONSE AND NOTIFICATION PROCEDURES

A. Discovery of a Spill

1. Upon discovery of a spill, facility personnel should immediately assess the situation and determine if the spill is considered a "Minor" or "Major" spill. For a spill to be considered "Minor" all the following conditions must be satisfied:

    - ❖ The type of material spilled is known;
    - ❖ The spill is confined to the immediate work area;
    - ❖ The spill has not reached storm drains, sanitary sewer systems, open water, or surrounding soils;
    - ❖ The spill can be safely managed;
    - ❖ The employee can contain and clean up the spill with the PPE that is normally used in the work area;
    - ❖ The spill does not pose a serious threat of fire or an explosion; and
    - ❖ The spill does not pose conditions that are immediately dangerous to life or health.

2. If all the above conditions are met, the spill is considered "Minor". Refer to ***Section B*** of this document for appropriate response actions.

3. If all the above conditions are not met, then the spill is considered "Major". Refer to ***Section C*** of this document for appropriate response actions.

4. If a spill involves flammable liquids, ignitable vapors may be present - precautions must be taken to prevent ignition. Do not turn on or off equipment since sparks may be generated. Additionally, avoid the movement of equipment that could create static electricity. Larger spills of flammable liquids could pose a fire threat and would be considered a "Major" spill. Refer to ***Section C*** for appropriate actions.

B. Response to a "Minor" Spill

1. Identify the source of the spill and the direction in which the spill is heading.

2. Attempt to stop the spill at the source. Where applicable, the source of the spill shall be taken out of service until repairs can be made. If the spill is related to a fuel dispensing system, activate the Emergency Shut-Off (ESO) switch to prevent additional fuel disbursements.

3. If material is released outside a containment area, it is crucial that the material be contained as quickly as possible. Following proper safety procedures, use absorbent materials or diking to contain the spill. Prevent the spill from reaching storm drains, sanitary sewers, or open water. If a spill is flowing toward a drain, install temporary diking around the drain, block off the drain with a drain cover, or place absorbent material around the drain to prevent a discharge.

4. Once the spill has been stopped and contained, estimate the quantity of the spill. Consult applicable Safety Data Sheet (SDS) for material compatibility and environmental precautions. Note and follow recommendations regarding special precautions, spill response equipment, methods, or precautions. All cleanup work shall be conducted in accordance with existing safety protocols and SDS recommendations. Contact the facility Superintendent/Supervisor, or designee, for assistance if needed.

5. Recover or clean up the spilled material as much as possible. Material that cannot be reused must be discarded in accordance with state and federal regulations. Liquids absorbed by porous materials (e.g., wood, gravel, significant quantities of absorbent material, etc.) shall be placed into US DOT-approved 30-gallon or 55-gallon steel drums. Following cleanup, the container shall be secured and appropriately labeled to identify the contents and the date of the spill/cleanup. Containers shall be stored indoors and provided with secondary containment until transported off-site for disposal.

6. For spills that do not involve flammable liquids or other potential hazardous wastes, small quantities of used absorbent materials may be double bagged and disposed of along with municipal trash as long as all liquids have been absorbed (no free liquid may be present).

7. If the spilled material is a flammable liquid, corrosive liquid (pH ≤ 2 or ≥ 12.5), or other potential hazardous waste, all recovered product, impacted material, and used absorbent must be placed into a US DOT-approved containers/drums. Following cleanup, the container(s) shall be secured and appropriately labeled to identify the contents and the date of the spill/cleanup. Containers shall be stored indoors and provided with secondary containment until transported off-site for disposal. The facility Superintendent/ Supervisor, or designee shall be notified that a potential hazardous waste was released and that a waste characterization may be needed to facilitate proper disposal.

8. Surfaces that are contaminated by the spill shall be cleaned utilizing dry absorbent material. Tools and equipment that have been used in the cleanup must be decontaminated immediately after use. Decontamination water (if used) must be minimized, containerized, and disposed of properly.

9. If waste requires disposal, notify the facility Superintendent/Supervisor, or designee who will arrange for the proper characterization and disposal of any waste material. Representative sampling and analysis may be necessary to properly characterize the waste. The waste must be transported and disposed of in compliance with all applicable laws and regulations. Waste manifests, trip tickets, or bills of lading (if required) for waste disposal shall be kept on file.

10. Facility personnel shall restock/replace spill response equipment and absorbent materials used during the clean-up efforts.

11. The facility Superintendent/Supervisor, designee, or other appropriate County personnel shall be notified of the spill in accordance with ***Section D*** of this document.

C. Response to "Major" Spill

A "Major" spill is any discharge that does not meet the definition of a "Minor" spill. Any employee or contractor observing, being involved with, or recognizing a potential or actual spill of oil or other hazardous material, other than a "Minor" spill is responsible for performing the following actions:

1. If there is no danger to human health, attempt to stop and contain the spill at the source. If the spilled material is unknown, if PPE other than that which is typically used in your work area, is necessary to approach the spill area, or if assistance is required to stop the spill, do not attempt to contain the spill. If the spill is related to a fuel dispensing system, activate the Emergency Shut-Off (ESO) switch.

2. Most County employees lack the appropriate training to respond to "Major" spills. If the spill is of an unknown substance, is of a quantity that cannot be safely managed, or poses other risks beyond the training level of the employee, the employee should not attempt to contain or clean up the spill.

3. Evacuate individuals from the area and keep personnel away from the impacted area.

4. Immediately notify the facility Superintendent/Supervisor, or designee of the incident. The notified individual will determine the need for further evacuations and contact emergency response personnel (911), as necessary. *If a situation represents an immediate and grave danger to personnel, the public, structures, or other infrastructure, the individual discovering the incident may call 911 directly without first notifying facility management.*

5. The facility Superintendent/Supervisor or designee will determine if assistance from emergency response contractors is required to clean up the incident and will coordinate such spill response efforts with spill response contractors and other County agencies and first responders.

6. Facility personnel will provide assistance to emergency responders, as appropriate.

D. Reporting a Spill (Internal Notifications)

1. Once a spill is contained and cleanup operations have been initiated, the individual discovering the spill shall notify the appropriate County representatives and provide the following information:

    a) Identify the location, date, and time of the incident;
    b) Identify the type of material spilled or discharged;
    c) Estimate the quantity spilled and the rate of the spill;
    d) Identify the cause of the spill or discharge;
    e) Identify impacted media or infrastructure (soil, storm drains, open water bodies, etc.);
    f) Determine the extent of injuries involved; and
    g) Provide response measures implemented by the facility personnel.

E. Reporting a Spill (Regulatory Notifications)

State of Maryland Reporting Requirements (COMAR 26.10.01.05)

1. Upon discovery of a spill, the Responsible Person shall notify the MDE Emergency Response Division **within two (2) hours** by calling 866-633-4686. The caller shall be prepared to provide the following information:

    a) The time and date of the spill;
    b) The location and cause of the spill;
    c) The mode of transportation or type of facility involved;
    d) Type and quantity of oil spilled;
    e) Details regarding any assistance required;
    f) The name, address, and telephone number of the person making the report; and
    g) Any other pertinent information requested by the Department.

2. MDE will provide further guidance on additional responsibilities.

3. Within **ten (10) working days** of the completed removal and clean-up activities, the Responsible Person shall prepare a report using either County letterhead detailing the incident. The report shall contain the following:

    a) Date, time, and place of the spill;
    b) The amount and type of oil or hazardous substance spilled;
    c) A complete description of circumstances that contributed to the spill;
    d) A complete description of the containment and removal operations performed, including disposal sites to which oil refuse was transported;
    e) Procedures, methods, and precautions instituted to prevent the recurrence of an oil spill from the facility involved;
    f) Any other information considered necessary or required by the MDE for a complete description of the incident; and
    g) A certification that the information provided is true and correct to the knowledge of the person signing the report.

4. The completed report shall be submitted to mdeerd.mema@maryland.gov or faxed to 410-537-3932.

5. A digital copy of the completed report and any accompanying documentation shall be retained

Federal Reporting Requirements - National Response Center (40 CFR 110)

1. If any of the following criteria are met the Responsible Person shall notify the National Response Center (NRC) **within two (2) hours** of the spill discovery by calling 800-424-8802 or 202-426-2675.

    - ❖ The spill has caused a film, sheen, or discoloration of the surface water or shorelines;
    - ❖ The material spilled will violate applicable water quality standards (surface water or groundwater); or
    - ❖ The spill has caused a sludge or emulsion to be deposited beneath the surface of the water or on the shoreline.

2. At a minimum, the following information shall be provided to the NRC:

    a) Name, organization, and telephone number of reporting party;
    b) Name and address of the responsible party;
    c) Date, time, and location of the incident;
    d) Source and cause of the discharge;
    e) Type of material(s) discharged;
    f) Quantity of materials discharged;
    g) Danger or threat posed by discharge;
    h) Number and types of injuries (if any);
    i) Weather conditions at the incident location; and
    j) Other information to help emergency personnel respond to the incident.

3. If unable to report to the NRC, reports can be made to the EPA Regional Office at 800-438-2474 or the U.S. Coast Guard (USCG) at 202-372-1001. The NRC, EPA, or USCG will provide further guidance.

4. A digital record of the NRC notification and any accompanying documentation shall be retained on-site.

Federal Reporting Requirements - EPA Regional Administrator (40 CFR 112.4)

1. If the facility where the spill occurred is regulated under 40 CFR 112 and is required to have a Spill Prevention, Control, and Countermeasures (SPCC) Plan, the Responsible Person shall report the spill to the EPA Region III Administrator when any of the following criteria are met:

   - More than 1,000 gallons of oil is discharged to navigable waters or adjoining shorelines in a single incident; or
   - More than 42 gallons of oil is discharged to navigable waters or adjoining shorelines in each of two incidents occurring within any twelve-month period.

2. The report shall be made in writing **within 60 days** of the spill and shall contain:

   a) Name and location of the facility;
   b) Owner/operator name;
   c) Maximum storage/handling capacity of the facility and normal daily throughput;
   d) Corrective actions and countermeasures taken;
   e) Adequate description of the facility including maps, and flow diagrams;
   f) Cause of the discharge to navigable waters, including a failure analysis;
   g) Additional preventative measures taken or planned to minimize discharge reoccurrence; and
   h) Other information required by the EPA Regional III Administrator.

3. The report shall be submitted to the EPA Regional Administrator at the following address:

   EPA Regional Administrator
   US EPA Region 3
   1650 Arch Street (3RA00)
   Philadelphia, PA 19103-2029

4. A copy of the report shall be retained in the facility SPCC Plan.

Appendix D

Training Records

GOOD HOUSEKEEPING PLAN (GHP)
TRAINING ATTENDANCE LOG

FACILITY NAME: _____

DATE	NAME *(PRINT)*	SIGNATURE

By signing I affirm that I have completed the required annual training; and I am aware of and understand my responsibilities under this Plan.

GOOD HOUSEKEEPING PLAN (GHP)

North Harford Station
50 Pylesville Road
Pylesville, MD 21132

June 30, 2025

TABLE OF CONTENTS

1.0 BACKGROUND & INTRODUCTION 1
1.1 Objectives 1
1.2 Potential Stormwater Pollutants 1
2.0 RESPONSIBILITIES 3
2.1 GHP Implementation 3
2.2 Plan Review and Modification 3
2.3 Inspections 3
2.3.1 GHP Site Inspections 3
2.3.2 Conveyance System Inspections 4
2.4 Training 4
3.0 BEST MANAGEMENT PRACTICES (BMPs) 5
3.1 Applicability of BMP Fact Sheets 5
3.2 BMP Fact Sheets 5

List of Tables

TABLE 1-1 POTENTIAL STORMWATER POLLUTANTS AND THEIR SOURCES 2

List of BMP Fact Sheets

GH-01 - Waste Management
GH-02 - Vehicle and Equipment Storage
GH-03 - Vehicle/Equipment Refueling
GH-04 - Vehicle Maintenance
GH-05 - Vehicle/Equipment Washing
GH-06 - Material Storage
GH-07 - Aboveground Storage Tanks
GH-08 - Resident Drop-Off Centers
GH-09 - Stockpiles
GH-10 - Deicing Materials

Appendices

Appendix A: GHP Site Inspection Checklist
Appendix B: GHP Stormwater Conveyance Inspection Checklist
Appendix C: General Spill Response Procedures
Appendix D: Training Records

List of Acronyms

AST	-	Aboveground Storage Tank
BMP	-	Best Management Practice
CFR	-	Code of Federal Regulations
GHP	-	Good Housekeeping Plan
MDE	-	Maryland Department of the Environment
MS4	-	Municipal Separate Storm Sewer System
NPDES	-	National Pollutant Discharge Elimination System
SPCC	-	Spill Prevention, Control, and Countermeasure Plan

1.0 BACKGROUND & INTRODUCTION

Polluted stormwater runoff has the potential to enter the County's storm sewer systems (referred to as a municipal separate storm sewer system or MS4), and then discharge, untreated, into local water bodies. To address this potential stormwater pollution, the County is required to obtain a NPDES permit from the Maryland Department of the Environment (MDE). The NPDES Permit requires the County to take actions to prevent stormwater pollution, maintain storm sewer systems, monitor stormwater discharges, and develop and implement comprehensive management programs to minimize the discharge of pollutants from the storm sewer system.

To comply with Part IV.D.4.b of the County's Phase I MS4 Permit, the County must develop, implement, and maintain a Good Housekeeping Plan (GHP) for certain County-owned properties not required to be covered under Maryland's General Permit for Discharges from Stormwater Associated with Industrial Activities *(General Permit 12-SWA / 20-SW).*

To support this effort, a *"Good Housekeeping Plan Applicability Certification"* has been developed to evaluate and document if a specific County-owned facility is subject to the GHP requirements. The *"GHP Applicability Certification"* includes the following ten (10) potential stormwater polluting activities. If any of the covered activities are performed at the facility, then that facility is required to implement a site-specific GHP. The GHP will include each of the potential stormwater polluting activities identified in the *"GHP Applicability Certification"* and corresponding pollution prevention procedures.

- Waste Management
- Vehicle and Equipment Storage
- Vehicle/Equipment Refueling
- Vehicle Maintenance
- Vehicle/Equipment Washing
- Material Storage
- Aboveground Storage Tanks
- Resident Drop-Off Center
- Stockpiles
- Deicing Materials

1.1 Objectives

The GHP was developed to outline suitable practices, procedures, and protocols, or Best Management Practices ("BMPs") for reducing and/or preventing stormwater pollution associated with operations at covered County-owned properties. The intent of the pollution prevention procedures included in the GHP is to limit the release of materials with the potential to impact stormwater, this includes reducing or eliminating (to the extent practical):

- The occurrence of spills and leaks;
- The accidental dumping or release of materials;
- The accumulation of waste, trash, debris, unused parts/equipment, etc.;
- The exposure of hazardous materials to precipitation/run-off;
- Stormwater run-off contamination by improperly stored materials; and/or
- Illicit discharges to the storm drain system.

1.2 Potential Stormwater Pollutants

Table 1-1 on the following page provides a list of common potential pollutants that may result from the GHP-regulated activities identified above. Understanding the sources of these pollutants can help in achieving the goals and objectives of the GHP program.

TABLE 1-1 POTENTIAL STORMWATER POLLUTANTS AND THEIR SOURCES

		Waste Management	Vehicle/Equipment Storage	Vehicle/Equipment Refueling	Vehicle Maintenance	Vehicle/Equipment Washing	Material Storage	Aboveground Storage Tanks	Resident Drop-Off Center	Stockpiles	Deicing Materials
Pollutants	**Sources**	**Associated GHP Activity**									
Sediment	Land disturbance; erosion; paved surfaces; material stockpiles; waste storage; salt/abrasive application	X				X	X		X	X	X
Hydrocarbons *(petroleum compounds)*	Leaking vehicle and equipment; vehicle and equipment cleaning; spills; improper storage; maintenance activities; scrap metal disposal; improper disposal	X	X	X	X	X	X	X	X		
Metals	Vehicle brake and tire wear; vehicle/equipment exhaust; batteries; galvanized metal; paint and wood preservatives; fuels, pesticides, and cleaners; vehicle fueling, maintenance, and washing; industrial waste	X	X	X	X	X	X	X	X		
Toxic Chemicals	Pesticide application; improper chemical storage; leaks and spills from storage containers; leaking vehicles; maintenance activities	X	X		X	X	X	X	X		
Chlorides	De-Icing chemicals										X
Trash/Debris	Improper waste storage and disposal; leaking trash containers; littering; poor housekeeping	X	X				X		X		
Nutrients (nitrogen and Phosphorus)	Fertilizers; malfunctioning septic systems; sewer overflows; animal/pet waste; vehicle washing; decaying grass and leaves; leaking trash containers; atmospheric deposition	X				X	X		X		

2.0 RESPONSIBILITIES

2.1 GHP Implementation

A separate GHP is required for each covered facility. The following individual *(identified by name and/or title)* is accountable for the administration and implementation of the GHP at this facility and has the authority to commit the necessary resources to implement this Plan.

_____

Name and/or Title of Responsible Person

The Responsible Person listed above shall ensure that facility personnel involved in any GHP-covered activities identified in this Plan, are provided with access to, and are familiar with, the contents of this Plan.

2.2 Plan Review and Modification

The *"GHP Applicability Certification"* completed for this facility must be reviewed and updated once every permit term, or within one (1) year of substantial changes to a facility's operations that could reasonably contribute to stormwater pollution. Any newly constructed/acquired facility must be assessed within one (1) year of initiating operations at the facility. The facility's GHP must be amended and reissued to the facility within one (1) year of any changes to the facility's *"GHP Applicability Certification"*.

When warranted, the BMP Fact Sheets provided in Section 3.0 may need to be updated or revised. At the same time, additional BMP Facts Sheets may be added. The need for such updates or modifications will be at the discretion of the County's GHP Program Administrator.

2.3 Inspections

The County's MS4 permit requires each facility covered by a GHP to have the following:

1. Written procedures for annually assessing County properties to prevent the discharge of pollutants, spills, and leaks into the County's storm sewer system; and

2. Written procedure for performing stormwater conveyance system inspections and for removing debris that may cause clogging, backups, and flooding.

To meet these requirements, each facility that is covered by a GHP will be required to complete routine site inspections and stormwater conveyance system inspections as detailed below. Facility management will be responsible for ensuring the necessary inspections are completed within the required timeframes, that corrective actions (if needed) are performed, and that records of inspections and completed corrective actions are maintained for at least five (5) years.

2.3.1 GHP Site Inspections

The GHP Site Inspection will be performed to ensure that each GHP-covered facility is being properly maintained and that there are no visible signs of pollutants entering the stormwater system. GHP facilities shall utilize the *"GHP Site Inspection Checklist"*, provided in ***Appendix A*** to complete the required inspection. At a minimum, each facility is to be inspected every five (5) years.

2.3.2 Conveyance System Inspections

Stormwater conveyance systems are generally comprised of curbs and gutters, catch basins, inlet structures, swales, channels, piping, culverts, detention ponds, outfalls, or other structures that are used to collect, contain, and convey stormwater runoff.

The unimpeded movement of stormwater through conveyance systems is critical in avoiding backups and flooding, which can impede facility operations and damage property. Routine inspections and preventative care of stormwater conveyance systems can ensure these systems function as intended and prevent the need for costly and time-consuming repairs and retrofits.

Each GHP-covered facility is required to conduct routine stormwater conveyance system inspections to ensure the free flow of stormwater within the conveyance systems. GHP-covered facilities shall utilize the *"GHP Stormwater Conveyance System Inspection Checklist"*, provided in ***Appendix B*** to complete the required inspections. At a minimum, facility conveyance system inspections are to be conducted every five (5) years.

2.4 Training

As part of the GHP requirements within the County's Phase I NPDES permit, annual training must be provided to all appropriate staff and contractors. Such training shall be provided to any individuals responsible for implementing the GHP, performing the required inspections, or involved in any of the GHP-covered activities identified in this Plan. The required training shall focus on the duties and responsibilities assigned to site personnel in implementing the GHP and the best management practices (BMPs) prescribed in this Plan for preventing, reducing, and eliminating the discharge of pollutants during facility activities.

The County's MS4/GHP Program Coordinator will be responsible for developing the required training and disseminating it to GHP-covered facilities. Each GHP-covered facility will be responsible for identifying staff/contractors who must attend annual training, ensuring identified staff complete the required training, and maintaining records that document training dates and attendees. Training records and other documentation shall be maintained in ***Appendix D*** of this Plan.

3.0 BEST MANAGEMENT PRACTICES (BMPs)

This section contains a BMP Fact Sheet for each of the ten (10) GHP-regulated activities. The County's operations are not limited to the BMPs contained within this document; nor is the County required to implement all of the pollution prevention measures identified within each BMP Fact Sheet. The County should select and implement those measures that are applicable and have the greatest potential for reducing stormwater pollution.

The BMP Fact Sheets contained within this document offer recommended protocols for a particular activity. These pollution prevention measures are considered non-structural BMPs with a focus on source control of potential pollutants.

3.1 Applicability of BMP Fact Sheets

The *"GHP Applicability Certification"* completed for this facility has identified the activities conducted at this facility that require coverage under this Plan. Each of the BMP Fact Sheets shall be marked as to whether they are applicable or not applicable to this facility. The Applicable/Not Applicable indicator on each BMP Fact Sheet can be revised in response to changes in operations at the facility.

3.2 BMP Fact Sheets

BMP Fact Sheets can be found on the following pages. For the sake of consistency, the general outline of a BMP Fact Sheet will be as follows:

- Identification of GHP-covered activity.
- Applicability of the BMP Fact Sheet to the facility.
- A general description of the concern the activity poses to stormwater.
- Recommended pollution prevention measures for reducing/eliminating stormwater pollution.
- Additional sources of information, if applicable.

WASTE MANAGEMENT

Not Applicable ☒ Applicable ☐

CONCERN

Improperly managed waste can allow trash and debris to be washed into storm drains which poses a concern to water quality, marine life, and public health. It also has the potential to create obstructions in the drainage system, which can lead to backups and flooding. Additionally, improper storage and handling of waste materials can allow pollutants including oils and greases, toxic and chemical compounds (including nutrients), bacteria, metals, and other potentially hazardous wastes to enter waterways.

POLLUTION PREVENTION MEASURES

General *(applicable to all waste management activities)*

1) Provide suitable containers, preferably with working covers, to collect waste materials.
2) Ensure that appropriate waste containers are available in areas where waste is generated.
3) Provide a cover over waste storage areas, if feasible.
4) Avoid positioning waste receptacles near storm drains, water bodies, or areas of concentrated runoff.
5) Ensure that lids to waste containers *(if present)* are kept closed to prevent the intrusion of precipitation and prevent trash from blowing out of the receptacle.
6) For waste receptacles, which do not have lids and could leak, containers should be inspected regularly and controls (e.g., containment, spill response, etc.) shall be enacted whenever leaks or dry-weather discharges are observed.
7) Routinely inspect waste containers, roll-offs, compactors, and other waste receptacles for the presence of excessive waste accumulation and overflowing containers.
8) Ensure that wastes accumulating on the ground are placed in a suitable waste container.
9) Ensure that wastes are removed from the facility regularly by a licensed and contracted vendor.
10) Repair or replace damaged waste container lids.

Trash Compactors

1) Routinely inspect trash compactors for malfunctioning equipment or leaking hydraulic oil and provide the appropriate spill response if leaking equipment is encountered.
2) Regularly inspect compactors for leaking fluids and implement appropriate controls such as spill response/cleanup, collection or diversion of released fluids, providing secondary containment, etc. whenever leaks or dry-weather discharges are observed.

Scrap Metal Collection Containers

1) Avoid placing oily or grease-covered items in uncovered scrap metal recycling collection containers. If needed, wrap oily/greasy items in plastic garbage bags before placing them in the collection container.

Hazardous/Universal Wastes

1) Ensure that hazardous waste and universal wastes (e.g., batteries, bulbs, etc.) are collected and stored indoors or within covered collection containers.
2) Verify that hazardous/universal waste collection containers are in good condition, not leaking, and compatible with the wastes being stored.

Street Sweeping / Vactor Truck Material Storage

1) Do not site storage areas near storm drains, open water bodies, or areas of concentrated runoff.
2) Install sediment control devices (e.g. silt fence, silt socks, hay bales, etc.) around the staging area. Inspect these controls regularly and replace them as needed.
3) Cover the materials staging area, if feasible.
4) Provide oil-absorbent booms if necessary to control oily discharge. Inspect and replace booms regularly.
5) The staging area should be checked periodically for evidence of sediment migrating outside of the staging area. Material that has migrated out of the staging area should be promptly swept and returned to the staging area or disposed of.

Waste Cooking Oil/Grease

1) Maintain storage containers indoors or within a covered location, if feasible.
2) Storage containers shall be secured to prevent infiltration of precipitation and accidental/intentional spills or releases.
3) Carefully transfer waste oil/grease to the appropriate collection container to avoid spills.
4) Maintain suitable spill response equipment near collection containers. Immediately clean up any spilled oil/grease. Keep the exterior of the collection container clean and free of spilled oil/grease.
5) Provide secondary containment for collection containers, if feasible.

VEHICLE AND EQUIPMENT STORAGE

Not Applicable ☐ Applicable ☒

CONCERN

Vehicles and equipment may be stored onsite to support various County operations (e.g., construction, maintenance, snow removal, roadside assistance, mass transit, mowing, etc.). Examples of County owned and operated vehicles and equipment stored onsite at any given time include but are not limited to, the following: cars, trucks, buses, emergency response vehicles, garbage trucks, heavy equipment (backhoes, frontend loaders, etc.), forklifts, towable generators, portable light stands, and roadside equipment. Vehicle and equipment storage is considered a pollutant source due to the potential for incidental releases of petroleum products, lubricants, and various automotive fluids.

POLLUTION PREVENTION MEASURES

1) When possible/practical, store vehicles and equipment inside or under cover to prevent exposure to precipitation.
2) If vehicles or equipment must be stored outside, store vehicles/equipment in designated areas away from areas of concentrated runoff, storm drains, and other stormwater conveyances.
3) Vehicles and equipment shall be staged on impervious (asphalt or concrete) surfaces;
4) Keep truck beds clean and ensure potential stormwater pollutants are stored in closed containers, covered, or otherwise protected from stormwater exposure.
5) Conduct routine visual inspections of vehicles and equipment for the presence of leaks and respond accordingly.
6) Leaking vehicles/equipment should be moved inside or under cover. At a minimum, drip pans or absorbent pads shall be used to contain the leak until the vehicle/equipment can be relocated and the leak addressed.
7) Drain all fluids from wrecked or heavily damaged vehicles and equipment before storage.
8) Have an adequate supply of appropriate spill response equipment readily available and clean up all spills and leaks immediately utilizing dry cleaning techniques (e.g. absorbents and brooms).
9) Train staff in spill response so that incidents are addressed in a timely fashion.
10) Do not wash down areas where leaks have collected on ground surfaces; use dry cleaning methods such as granular absorbents and brooms.

VEHICLE AND EQUIPMENT REFUELING

Not Applicable ☒ Applicable ☐

CONCERN

Refueling activities associated with County vehicles and equipment can result in a discharge of fuel (gasoline and diesel fuel), which has the potential to enter the storm drain system and/or a nearby waterway. Such releases can introduce hydrocarbons, metals, and other toxic chemicals to stormwater runoff.

POLLUTION PREVENTION MEASURES

General Procedures *(applicable to all refueling activities)*

1) Routinely *(at least daily)* inspect the fuel dispensing area for any spills or leaks.
2) Routinely inspect fuel dispensing equipment looking for leaking or damaged equipment. Damaged or malfunctioning equipment shall be taken out of service until it has been repaired.
3) Fuels will only be dispensed into authorized vehicles, equipment, and approved containers.
4) Vehicle operators must remain outside of their vehicles and in attendance of fuel dispensers at all times while dispensing fuel.
5) Third-party contractors must be trained in proper refueling procedures and pollution prevention.
6) Do not utilize a foreign object to keep the dispenser nozzle in the open position. If present, a “hold-open” latch on the nozzle may be used.
7) Do not “top off” a vehicle’s fuel tank once the dispenser nozzle’s automatic shut-off has been activated. Topping off tanks may result in spills. Post signs in fueling areas warning vehicle operators against "topping off" of vehicle fuel tanks.
8) After refueling has stopped, allow several seconds to pass before removing the nozzle and returning it to the dispenser. This will prevent incidental dripping from the nozzle.
9) Employees refueling vehicles shall note the location of the “Emergency Fuel Shut Off” switch, to be used to stop the flow of fuel to the dispensers in the event of a release or emergency.
10) Have an adequate supply of appropriate spill response equipment readily available and clean up all spills immediately utilizing dry cleaning techniques (e.g. absorbents and brooms).
11) Immediately clean up and dispose of used absorbent material.
12) Do not wash down fueling areas; use dry cleaning methods such as granular absorbents and brooms.
13) Conduct refueling activities over impervious (e.g. concrete) surfaces. Place drip pans or absorbent pads under the nozzle if fueling occurs over a permeable surface such as grass or soil.
14) Install oil control devices in storm drains that may receive contaminated runoff from fueling areas.
15) Cover fueling areas with a canopy or roof to prevent direct contact with rainfall. Direct run-on away from fueling areas and collect fueling area run-off in a dead-end sump or oil-water separator.

Mobile Equipment Refueling

1) Refuel equipment on an impervious surface, downgradient of, and at the farthest practical distance from any storm drain, stormwater conveyance, stormwater management feature, or waterway.
2) Utilize secondary containment when refueling equipment (when practical).
3) Ensure mobile refuelers are parked in designated locations and away from areas of concentrated run-off, storm drains, and other stormwater conveyances.
4) Ensure that procedures are in place and that staff is properly trained in spill response/cleanup so that leaks and spills are addressed appropriately and promptly.

VEHICLE MAINTENANCE

GH-04

Not Applicable ☒ Applicable ☐

CONCERN

Vehicle and equipment maintenance can impact the water quality of nearby waterways by exposing stormwater to various pollutants including petroleum hydrocarbons, solvents, antifreeze/coolants, used oil, lubricating oil, grease, brake fluid, metals, and various chemicals. Additionally, vehicles that are wrecked or awaiting repair can be a source of pollution if leaking fluids are not properly controlled.

POLLUTION PREVENTION MEASURES

1) Conduct vehicle and equipment maintenance activities indoors.
2) Make sure incoming vehicles and equipment are inspected for leaking fluids and oil.
3) Move leaking vehicles or equipment indoors or under cover as soon as possible. At a minimum, a drip pan or absorbent pads shall be utilized to contain the leak until the vehicle/equipment can be relocated and the leak addressed.
4) Avoid performing maintenance on vehicles in close proximity to exterior doorways, which may allow released fluids to migrate outdoors.
5) Have an adequate supply of appropriate spill response equipment readily available and clean up all spills and leaks immediately utilizing dry cleaning techniques (e.g. absorbents and brooms).
6) Keep maintenance areas neat and well organized. Remove dirt, debris, and used absorbent regularly.
7) Inspect maintenance areas as well as maintenance equipment on a routine basis.
8) Store vehicles, parts, and generated wastes indoors or off the ground and under cover whenever possible. When practical, provide secondary containment.
9) Promptly transfer used fluids to the proper waste container; do not leave full drip pans or other open containers around the shop. Empty and clean drip pans and containers regularly.
10) Waste liquids shall not be poured into floor drains, sinks, outdoor storm drain inlets, or other storm drains or sewer connections. Liquid wastes are to be collected in properly labeled containers and disposed of by a licensed waste hauler or other appropriate method.
11) Store leaking batteries in a sealed container and provide secondary containment, if feasible.
12) Clean all parts indoors utilizing a self-contained parts washer.
13) Do not hose down indoor service areas to storm drains or areas where it can seep into groundwater.
14) Maintain floor drains in good working order and inspect for proper function on a routine basis. Consider plugging floor drains that discharge to the storm sewer.
15) Ensure oil/water separators (if present) are maintained in proper working order and are checked on a routine basis for the presence of oil.
16) If maintenance work must be performed outdoors, adhere to the following requirements:
    - Conduct maintenance activities over an impervious surface, away from stormwater inlets.
    - Cover outdoor maintenance areas and direct stormwater run-on away from the area.
    - Use drip pans or drop cloths underneath the equipment to catch leaks and drips.
    - Have an adequate supply of appropriate spill response equipment readily available.
    - Clean all spills immediately using dry cleaning techniques (e.g. absorbents and brooms).
    - Avoid performing maintenance activities during precipitation events.
    - Limit temporary outdoor maintenance activities to a single shift/day if additional time is needed to cover the work area at the end of each day/shift.

BMP Fact Sheet

VEHICLE AND EQUIPMENT WASHING

GH-05

Not Applicable ☒ Applicable ☐

CONCERN

Vehicle and equipment washing can generate washwater that contains oil, grease, organic compounds, surfactants, phosphates, metals, and suspended solids. If vehicles/equipment are washed outdoors on impervious surfaces, dirty washwater can contaminate stormwater that ends up in waterways. Washing equipment over pervious surfaces can allow washwater to seep into the ground contaminating groundwater.

POLLUTION PREVENTION MEASURES

1) Vehicle and equipment washing should only be conducted in designated indoor wash bays that capture and recycle washwater to the extent practical.
2) Wastewater from the washing facility should be discharged to the sanitary sewer system under the authorization of a wastewater discharge permit issued by the local municipal authority.
3) The floor of indoor vehicle wash bays should be completely bermed or sloped to collect wash water and prevent migration outdoors.
4) No other activities (e.g., fluid changes, repairs, material storage) shall be performed in wash areas.
5) Keep the wash bay neat and well organized. Sweep or pick up all trash and debris daily or as needed.
6) Solid materials accumulated on vehicles or in vehicle beds (e.g. salt, soil, grass, etc.) shall be knocked off or otherwise removed from the vehicle (while inside the wash bay) prior to washing. Solid materials shall be collected and disposed of properly.
7) For vehicles too large to completely fit in the wash bays, only the portion of the vehicle physically located in the confines of the wash bay shall be cleaned. The vehicle shall then be rotated to allow for the remaining portion of the vehicle to be washed.
8) Use nozzles that automatically turn off water when not in use and consider high-pressure, low-volume sprays.
9) Avoid detergents as much as possible. If detergents are necessary, use a biodegradable, phosphate-free detergent.
10) If discharging to an oil-water separator, use a non-emulsifying detergent.
11) Inspect floor drain systems, holding tanks, and conveyances associated with designated wash areas regularly. Maintain oil/water separators and/or process flowthrough separators on a routine basis.
12) Use commercial car washes when vehicle or equipment washing cannot be performed onsite without causing impacts to stormwater.
13) If washing must occur onsite and outdoors, use a designated impervious area that is marked with posted signs indicating proper washing procedures. This area must be bermed to contain the wash water and graded to direct the wash water to the sanitary sewer, an oil-water separator, a holding tank, a dead-end sump, or other containment area. Captured water shall be disposed of properly.
14) Avoid steam cleaning and engine/undercarriage washing which can produce high pollutant concentrations. If steam cleaning or engine washing is necessary, perform such cleanings within isolated indoor areas, and ensure wash water is treated and discharged to the sanitary sewer (if permitted to do so) or captured for off-site disposal.
15) Train staff in proper washing techniques and how to confine washing to designated wash areas.
16) Consider alternatives to washing such as using air to blow grass and debris from small equipment, wet-wiping equipment with rags, etc.

BMP Fact Sheet

MATERIAL STORAGE

GH-06

Not Applicable ☒ Applicable ☐

CONCERN

The storage of petroleum products, chemicals, paints, cleaners, pesticides, fertilizers, bags of erodible materials like sand, cement, and soil, and other potential pollutants can negatively impact surface waters through the accidental releases or leaching of materials into stormwater. Unprotected outdoor storage areas can generate a wide range of stormwater pollutants, such as sediment, nutrients, toxic materials, and petroleum products.

POLLUTION PREVENTION MEASURES

1) Whenever possible, store containers (e.g. drums, bins, bags, cans, and totes) indoors or under cover to limit exposure to stormwater.
2) Designate specific areas for material delivery and storage that are away from heavy traffic areas, storm drains, stormwater conveyances, and areas of concentrated run-off.
3) Designated outdoor storage areas should be paved or consist of an impervious surface.
4) Provide secondary containment for materials whenever possible or required per regulation.
5) Store materials on pallets to prevent stormwater run-on from coming into contact with materials, prevent container corrosion, and allow for better leak detection. Pallets must be in good condition and promptly replaced once damaged or deteriorated.
6) Stack containers according to the manufacturer's recommendations to avoid damage.
7) Immediately replace damaged, corroded, or leaking containers.
8) Ensure all storage containers are clearly labeled with their contents.
9) Keep containers tightly sealed after use.
10) Maintain an accurate inventory of hazardous substances and limit on-site storage to that which is necessary to support facility operations.
11) Keep storage areas neat and well organized; remove debris and unneeded material promptly.
12) If empty drums are stored outdoors, ensure that all openings are equipped with caps to prevent water intrusion and that the drum/storage area is labeled "Empty Drums".
13) Have an adequate supply of appropriate spill response equipment readily available and clean up all spills and releases immediately utilizing dry cleaning techniques (e.g. sweeping/absorbents).
14) Clean up all migrating dry materials upon discovery and address the source of the release.
15) Provide perimeter controls (e.g., berms, rock check dams, etc.) for erodible stockpiles of materials such as mulch, sand, and gravel to prevent migration into the stormwater system.
16) Routinely inspect material storage areas for leaks, material migration, and damaged or corroded containers. Ensure that secondary containment and other perimeter controls are in satisfactory condition.
17) Additional visual inspections of outdoor storage areas should be conducted after significant rainfall events (i.e., greater than 0.5 inches).

BMP Fact Sheet

ABOVEGROUND STORAGE TANKS

GH-07

Not Applicable ☒ Applicable ☐

CONCERN

Aboveground storage tanks (ASTs) may be used to store fuels, automotive fluids, chemicals, or deicing fluids. Leaks from tanks, piping, or other equipment and releases during fluid transfers can all impact stormwater quality. It is critical to maintain ASTs in good working condition to prevent spills and/or releases from occurring. Improperly managed storage tanks can cause significant environmental impacts.

POLLUTION PREVENTION MEASURES

General *(applicable to all storage tanks)*

1) ASTs should be installed and maintained in accordance with COMAR 26.10 and applicable fire codes.
2) ASTs should be provided with secondary containment, whenever feasible or required by regulation.
3) Secondary containment areas shall be maintained clean and dry; drain valves must be kept closed; accumulated liquid shall only be discharged if there are no visible signs of impacts, and in accordance with applicable regulations.
4) Inspect ASTs monthly to identify any leaking or malfunctioning equipment and ensure tanks are functioning as designed.
5) ASTs shall be equipped with a form of liquid-level detection (i.e. sight gauge, electronic monitoring).
6) ASTs shall be equipped with overfill prevention (i.e. overfill alarm and/or overfill prevention valve).
7) Tanks and piping should be protected from vehicle impact via barriers, bollards, guard rails, etc.
8) Install ASTs on solid foundations over impervious surfaces, and away from areas of concentrated run-off, storm drains, and other stormwater conveyances.
9) Properly label all storage tanks (e.g., contents, capacity, etc.).
10) Keep remote fills and fill port spill buckets clean and dry.
11) Keep fill ports, gates, and tank areas secured when not in use to prevent fuel theft and tampering.
12) Have an adequate supply of appropriate spill response equipment readily available and clean up all spills and leaks immediately utilizing dry cleaning techniques (e.g. absorbents and brooms).
13) Facilities that maintain 1,320 gallons or more of aboveground oil products shall prepare and implement a Spill Prevention, Control, and Countermeasure (SPCC) Plan, per 40 CFR 112.
14) Facilities that maintain 1,000 gallons or more of used oil or 10,000 gallons or more of virgin oil in ASTs shall obtain an Individual Oil Operations Permit from the MDE, per COMAR 26.10.01.09.
15) Owners/Operators of facilities that maintain more than 2,500 gallons of oil in ASTs are required to register each AST with MDE, per COMAR 26.10.01.10.

Bulk Fluid Transfers (Deliveries)

1) All bulk fluid transfer operations shall be performed under the direct supervision of knowledgeable County personnel. At no time shall the delivery vehicle or delivery vehicle operator be unsupervised.
2) The product level within the tank must be measured and available capacity verified before delivery.
3) Deliveries shall be made via fill ports equipped with catch basins to capture drips and spills.
4) Ensure an adequate supply of appropriate spill response equipment is readily available.
5) Post signs in delivery area displaying proper delivery procedures and emergency contact information.

ABOVEGROUND STORAGE TANKS

Used Oil Tanks

1) County personnel must verify the level of product in used oil tanks prior to filling.
2) Used oil tanks should only be filled via designated fill ports. Pumping used oil into the tank via a closed piping system is preferred to manually pouring used oil into the tank.

Brine Tanks

1) If multiple tanks are located onsite, the tanks should be plumbed to ensure that the complete failure of one tank will not drain all the tanks in the system (tanks must be isolated).
2) Minimize seeping and leaking at fittings by properly supporting piping and fittings, using flexible connectors or hoses to reduce stress, and installing corrosion-resistant fittings.
3) Consider placing hoses in non-permeable trenches or using drip-less nozzles to reduce repeated small spills.

RESIDENT DROP-OFF CENTER

Not Applicable ☒ Applicable ☐

CONCERN

Resident Drop-Off Centers are publicly accessible facilities where residents can drop off used automotive fluids (i.e. oil or antifreeze), municipal waste, recyclable, and/or organic waste, typically free of charge. Improper transfer or management of the waste materials can allow a number of pollutants including oils and greases, toxic and chemical compounds, nutrients, metals, and other wastes to enter waterways.

POLLUTION PREVENTION MEASURES

General *(applicable to all materials collected)*

1) Clearly identify waste materials accepted by the facility, and clearly mark designated collection areas.
2) Waste material should be inspected by a County representative, prior to disposal.
3) Avoid positioning waste receptacles near storm drains, water bodies, or areas of concentrated runoff.
4) When practical, receiving areas should be covered.
5) Do not allow containers to overflow or waste materials to accumulate on the ground.

Automotive Fluid Collection

1) Used oil, antifreeze, and automotive fluid receiving areas should be on impervious surfaces, covered, and provided with secondary containment, which shall be maintained clean and dry.
2) Provide lidded waste receptacles in the receiving area for the public to dispose of empty containers. Waste receptacles shall be emptied routinely and waste disposed of properly.
3) Collection areas shall be inspected daily and all trash and spilled liquids appropriately cleaned up.
4) The available capacity of waste liquid collection containers shall be routinely verified and waste removals scheduled, as needed.
5) Install appropriate controls to prohibit the overfilling of waste fluid collection containers.
6) Place appropriate spill response equipment in close proximity to drop-off areas.
7) If aboveground tanks are used to collect waste fluids, refer to BMP Fact Sheet GHP-07 (Aboveground Storage Tanks) for additional recommendations.

Organic Debris Collection

1) Routinely transfer collected organic debris/waste to a composting or disposal facility.
2) Do not permit composting of organic waste except at properly designed and permitted facilities.
3) Enact controls to prevent leaves and other windblown debris from entering stormwater inlets.

Municipal Waste / Recyclables Collection

1) Refer to BMP Fact Sheet GHP-01 (Waste Management) for additional recommendations.

BMP Fact Sheet

STOCKPILES

GH-09

Not Applicable ☒ Applicable ☐

CONCERN

The County may stockpile various erodible materials, the type of material can vary depending on the needs of the County. Stockpiled material may include soil, sand, millings, slag, cinders, sawdust, landscaping bark, compost, etc. Exposed stockpiles can easily erode due to wind or precipitation and contribute suspended solids to stormwater runoff.

POLLUTION PREVENTION MEASURES

1) Maintain stockpiles of erodible materials within roofed storage buildings or covered storage bins, if feasible. If not, stockpile material on an impervious surface and cover the stockpile.
2) Temporary stockpiles should be placed on an impermeable membrane (tarp) for quick clean-up.
3) Locate stockpiles away from drain inlets, catch basins, swales, areas of concentrated stormwater flow, water bodies, and environmentally sensitive areas.
4) Divert stormwater flows away from/around the stockpiles using a diversion device (e.g., temporary swale, berm, sandbags, or diversion fence).
5) Cover temporary stockpiles of erodible materials with a tarp that has been adequately secured. The covers must be in place at all times when the stockpile is not in active use.
6) When accessing a portion of the stockpile, only remove a section of the cover to minimize exposure to the elements.
7) Use barriers to isolate stockpiled materials from high-traffic areas to prevent tracking of materials.
8) Sweep (do not wash or hose down) in front of material stockpile storage areas at regular intervals, following loading and unloading activities, and during times of heavy use.
9) If material is observed migrating from the stockpile, clean up all migrated material upon discovery and provide additional controls to reduce migration from the stockpile. If such measures are ineffective implement controls to capture pollutants before they migrate off-site (e.g. silt fencing, inlet filters, filter socks, at-grade inlet protection, etc.).
10) Minimize material stockpile inventory based on historical inventory/usage records and public safety operational needs.
11) Cold mix asphalt shall be stored on and covered with plastic sheeting or comparable material.
12) Routinely inspect outdoor material stockpiles to verify existing controls are functioning properly and for signs of erosion or material transport.

BMP Fact Sheet

DEICING MATERIALS

GH-10

Not Applicable ☒ Applicable ☐

CONCERN

When salt and other de-icing materials are stored outside and uncovered, they have a much higher risk of being eroded and transported offsite by stormwater. Improper de-icing material and sand storage may result in stormwater runoff containing elevated concentrations of sodium chloride and dissolved solids. Sodium chloride (e.g., road salt) is an effective deicer but can be highly corrosive to stormwater facilities. Smaller waterways are at a higher risk to increases in salinity, which can threaten aquatic species. Additionally, runoff containing sodium chloride has the potential to reach drinking water sources where small traces can adversely impact public health.

POLLUTION PREVENTION MEASURES

1) Bagged de-icing chemicals must be stored indoors. If stored outdoors bags must be kept on pallets (off the ground) and covered at all times. Bags must be intact without holes or openings.
2) Bulk de-icing materials shall be stored under cover and on an impervious surface.
3) Bulk salt storage areas/buildings shall not be overfilled so that salt spills out beyond the entrance of the storage area/building.
4) Bulk salt storage areas/buildings shall be maintained in a structurally sound condition and in a way that prevents the release of salt and the infiltration of stormwater. Deicing materials should not touch the sides of metal storage containers.
5) Barriers such as berms, gates, knee walls, tarps, and/or straw bales shall be placed at the entrances of bulk salt storage areas/buildings to prohibit the migration of salt and prevent contact with precipitation/stormwater runoff.
6) Routinely inspect storage areas for migrating materials or deterioration of containment structures. Sweep up all migrating materials upon discovery and repair the source of the migrating pollutant.
7) Loading areas should be constructed of impervious material and covered or enclosed, to the extent practical, to reduce potential contact with stormwater.
8) Minimize the distance de-icing materials are transported during loading/unloading activities.
9) Prevent and/or minimize the spillage of salt and de-icing materials during loading/unloading activities, immediately clean spilled or tracked materials.
10) Sweeping of storage and loading/unloading areas shall be conducted immediately following loading/unloading activities.
11) Do not store de-icing materials (bulk or bagged) over or immediately adjacent to drains or waterways.
12) Control site drainage by diverting stormwater run-on away from storage/loading areas using appropriate measures (e.g., curbing, berms, etc.).
13) Slope storage/loading areas to direct salt-contaminated runoff to an appropriate collection area, and in a manner that prevents the runoff from reaching adjacent soil or surface waters.
14) Excess salt shall be removed from salt handling equipment (trucks, spreaders, etc.) following use/prior to storage. All cleaning shall occur on an impervious surface, which is sloped or curbed to contain any washwater and direct it to a collection area for recycling or proper disposal.

Appendix A

GHP Site Inspection Checklist

GOOD HOUSEKEEPING PLAN (GHP)
SITE INSPECTION CHECKLIST

Facility Name: _____ **Inspection Date:** _____

Inspector Name: _____ **Inspector Signature:** _____

- The intent of this inspection is to ensure that the site is being properly maintained and that there are no visible signs of pollutants entering the stormwater system.
- **A shaded status box designates an item in a non-compliant status. Please provide an explanation for all non-compliant items and subsequently document all corrective actions performed.**
- Retain the completed checklists for five (5) years.

Item	Status			CORRECTIVE ACTIONS/COMMENTS *Items which cannot be corrected immediately must be reported to the GHP/NPDES Program Manager*
	Yes	No	N/A	
GENERAL HOUSEKEEPING				
1. Are exterior areas of the facility free of accumulated trash, debris, and unneeded materials?				
2. Are stormwater drains and inlets free from debris, sediment, and evidence of spills/releases?				
3. Is the facility free from signs of erosion?				
4. Are paved surfaces free of accumulated sediment?				
5. Is spill response equipment available in maintenance areas, fueling areas, hazardous material storage areas, and/or other required areas?				
6. Are spill kits and absorbent materials clearly labeled and accessible (i.e. items are not piled on top of or in front of spill kits)?				
7. Are spill kits secured from being stolen or misused?				
8. Is there a labeled container present for the disposal of used spill cleanup material?				

GOOD HOUSEKEEPING PLAN (GHP)
SITE INSPECTION CHECKLIST

Item	Status			CORRECTIVE ACTIONS/COMMENTS *Items which cannot be corrected immediately must be reported to the GHP/NPDES Program Manager*
	Yes	No	N/A	
9. Does spill response equipment (i.e. spill kits, absorbent materials) need to be replenished?				
WASTE MANAGEMENT				
10. Are areas around solid waste containers/roll-offs/compactors free of excessive trash accumulation or overflowing containers?				
11. Are areas around solid waste containers/roll-offs/compactors free of visible evidence (i.e. leaks, staining) of ongoing stormwater pollution?				
12. Are scrap metal containers in good order and free from evidence of leaking oil/grease?				
13. For dumpsters, roll-offs, and other waste receptacles, where leaks are observed, have appropriate controls (e.g. containment, spill response, etc.) been enacted?				
14. Are the lids (if present) to solid waste containers closed?				
15. Is street sweeping/vactor waste being managed appropriately (i.e. no evidence of material migration)?				
16. Is waste cooking grease managed appropriately (i.e. no evidence of spilled material or excessive staining)?				
VEHICLE & EQUIPMENT STORAGE				
17. Are stored vehicles/equipment free from leaks?				
18. If leaks are present, are they being managed appropriately (drip pan or other methods in place to capture released liquids)?				
19. Are storage areas free of visible evidence of chronic leaks/spills (i.e. significant staining)?				

GOOD HOUSEKEEPING PLAN (GHP)
SITE INSPECTION CHECKLIST

Item	Status			CORRECTIVE ACTIONS/COMMENTS *Items which cannot be corrected immediately must be reported to the GHP/NPDES Program Manager*
	Yes	No	N/A	
VEHICLE & EQUIPMENT REFUELING				
20. Are the areas around refueling areas free from evidence of spills or leaks?				
21. Are refueling areas free of used absorbent material that has not been swept/cleaned up?				
22. Do fuel dispensers and hoses appear to be in good working order and well-maintained?				
VEHICLE MAINTENANCE				
23. Is there any indication that vehicle maintenance activities are being conducted outdoors?				
24. Is there any indication that vehicle maintenance activities are contributing to stormwater pollution?				
VEHICLE & EQUIPMENT WASHING				
25. If performed on-site, does all vehicle/equipment washing occur indoors?				
26. Is wash water collected and disposed of properly?				
27. Is there any indication that vehicle/equipment wash water is being released to stormwater conveyances or pervious areas?				
MATERIAL STORAGE				
28. Are all outdoor storage areas free from visible signs of leaks or spilled material?				
29. Are material storage containers in good condition?				

GOOD HOUSEKEEPING PLAN (GHP)
SITE INSPECTION CHECKLIST

Item	Status			CORRECTIVE ACTIONS/COMMENTS *Items which cannot be corrected immediately must be reported to the GHP/NPDES Program Manager*
	Yes	No	N/A	
30. Are drums, totes, and other containers (that are <u>not</u> empty) stored off the ground and covered, or stored indoors?				
31. Are liquid-containing drums/totes located outdoors provided with secondary containment?				
32. Are containers that are located outdoors equipped with closed lids except when material transfers are occurring?				
33. Are materials, which could impact stormwater, stored away from heavy traffic areas, or protected from vehicle collisions?				
34. Are chemical storage containers properly labeled?				
35. If empty drums are stored outside, are all openings equipped with caps to prevent water intrusion?				
ABOVEGROUND STORAGE TANKS				
36. Are all storage tanks, and surrounding areas free from visible signs of leaks or spilled material?				
37. Do storage tanks appear to be in good working order (e.g. free of obvious signs of damage or malfunctioning equipment)?				
38. Are remote fills associated with tanks free of liquid and debris?				
RESIDENT DROP-OFF CENTERS				
39. Are waste collection areas clearly identified?				
40. Are used oil/antifreeze collection tanks, containment structures, and surrounding areas free from visible signs of leaks or spilled material?				

GOOD HOUSEKEEPING PLAN (GHP)
SITE INSPECTION CHECKLIST

Item	Status			CORRECTIVE ACTIONS/COMMENTS *Items which cannot be corrected immediately must be reported to the GHP/NPDES Program Manager*
	Yes	No	N/A	
41. Do used oil/antifreeze collection tanks appear to be in good working order (e.g. free of obvious signs of damage or malfunctioning equipment)?				
42. Are empty used oil/antifreeze containers being collected and disposed of in the trash?				
43. Are areas around waste/recyclables containers free of excessive trash accumulation or overflowing containers?				
44. Are areas around waste/recyclables containers free of visible evidence (i.e. leaks, staining) of ongoing stormwater pollution?				
45. Are organic debris collection areas free of visible evidence of ongoing stormwater pollution (e.g. leaves and debris in stormwater conveyances)?				
STOCKPILES				
46. Are material piles, including salt, soil, sand, and millings isolated (i.e. covered, bermed, etc.) to prevent stormwater run-on and run-off?				
47. Are areas surrounding material piles (e.g. salt, soil, sand, millings, etc.) free of tracked or migrated material?				
DEICING MATERIALS				
48. Are all deicing materials stored indoors or undercover?				
49. Are salt storage structures in good condition (e.g. no evidence of material escaping or stormwater infiltration)?				
50. Is the salt loading area clean?				

GOOD HOUSEKEEPING PLAN (GHP)
SITE INSPECTION CHECKLIST

Item	Status			CORRECTIVE ACTIONS/COMMENTS *Items which cannot be corrected immediately must be reported to the GHP/NPDES Program Manager*
	Yes	No	N/A	
51. If deicing materials are tarped, is the tarp secure and covering the entire pile?				
52. Are bags of salt stored indoors, or off the ground and covered?				

ADDITIONAL COMMENTS:

Appendix B

GHP Stormwater Conveyance System Inspection Checklist

GOOD HOUSEKEEPING PLAN (GHP)
STORMWATER CONVEYANCE SYSTEM INSPECTION CHECKLIST

Facility Name: _____ **Inspection Date:** _____

Inspector Name: _____ **Inspector Signature:** _____

- The intent of this inspection is to ensure the free flow of stormwater within on-site conveyance systems and prevent damage/flooding.
- **If maintenance is needed, please provide an explanation, and document all corrective actions performed.**
- **Inspections shall include visually accessible infrastructure only; at no time shall inspection personnel enter a confined space.**
- Retain the completed checklists for five (5) years.

Item	Item Checked (Y/N/NA)	Maintenance Needed (Y/N)	CORRECTIVE ACTIONS/COMMENTS *Items which cannot be corrected immediately must be reported to the GHP/NPDES Program Manager*
CATCH BASINS / INLETS			
1. Look for debris and sediment blocking catch basin grates. If found, remove.			
2. Look for damage or cracks to the frame, grate, basin walls or bottom. If found, schedule repairs or replacement.			
3. Look for sediment and debris in the catch basin sump. If sediment fills 60% of the sump or comes within 6” of a pipe it should be scheduled for cleaning.			
4. If any type of filtering device is present, verify that the filter is not clogged, torn, or damaged; clean if clogged, replace if damaged.			
PIPES / CULVERTS			
5. Look for evidence of clogged piping (e.g. visual obstructions, standing water within manholes/inlets structures, etc.). If found, remove or schedule cleaning.			
6. Verify vegetation growth, if present, does not impede water flow. If it does, mow, cut back, or remove.			

GOOD HOUSEKEEPING PLAN (GHP)

STORMWATER CONVEYANCE SYSTEM INSPECTION CHECKLIST

Item	Item Checked (Y/N/NA)	Maintenance Needed (Y/N)	CORRECTIVE ACTIONS/COMMENTS *Items which cannot be corrected immediately must be reported to the GHP/NPDES Program Manager*
7. Inspect for damaged piping, inlets, outlets, headwalls, wingwalls, or excessive erosion. If found, make or schedule repairs.			
DITCHES / TRAPEZOIDAL SWALES			
8. Check for erosion, slumping, or undercutting. If found, make or schedule repairs.			
9. Look for trash and sediment accumulation. Remove all trash and remove sediment if it will impede water flow or clog downstream structures.			
10. Verify vegetation growth does not impede water flow. If it does, mow, cut back, or remove. Remove any trees or shrubs growing within the ditch.			
11. Check the integrity of check dams, filter socks, or other flow dissipation/filtering devices within the ditch or swale. Perform or schedule service if they are clogged, damaged, or deteriorated.			
12. Check inlets and outlets for debris accumulation, damage, or erosion. If found, make or schedule repairs.			

ADDITIONAL COMMENTS:

GUIDANCE DOCUMENT
GOOD HOUSEKEEPING PLAN - STORMWATER CONVEYANCE INSPECTIONS

INTRODUCTION

Maintaining catch basins, stormwater inlets, and other stormwater conveyance structures on a regular basis will remove pollutants, prevent backups, and ensure the system functions as intended to avoid flooding.

Each GHP-covered facility is required to conduct routine stormwater conveyance system inspections to ensure the free flow of stormwater within the conveyance system(s). The GHP includes a *"GHP Stormwater Conveyance System Inspection Checklist"*, to be used when completing the required inspections. This document provides additional background and guidance to aid facility personnel in completing the inspections.

CATCH BASINS / INLETS

Catch basins and inlets are all points for stormwater to enter storm drain systems. These structures are typically part of a larger conveyance system with many interconnected components where the impairment of one component can compromise the functionality of the larger system. Inlets and catch basins are subject to functional impairment by a variety of conditions, including:

- Structural damage including from vehicles and plows
- Cracks/joint separation at piping (inlet and outlet) connections
- Leaking due to cracks and joint separation
- Missing or damaged grates and grate frames
- Corrosion
- Blockage caused by debris, sediment, vegetation, or other objects

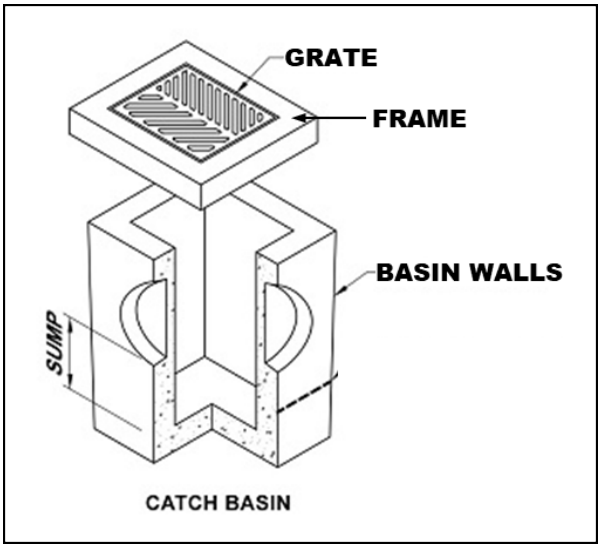

Figure 1 – Catch Basin Diagram

The following photos provide additional information related to the various inspection items, including examples of typical issues that may be encountered. The photo numbers correspond to the inspection checklist item number.

Inspection Item #1 [1]



Debris and sediment blocking inlet/catch basin grate.

Inspection Item #2 [2]



Damaged Grate

Inspection Item #2 [3]



Damaged Frame

Inspection Item #2 [4]



Failing brick walls with a stormwater inlet.

Inspection Item #2 [5]



Failing asphalt surrounding the inlet

[1] Grand Valley State University - https://www.gvsu.edu/groundswell/clogged-storm-drains-71.htm
[2] Georgia Department of Transportation – Stormwater System Inspection and Maintenance Manual, March 2020
[3] https://catchbasinauthority.ca/catch-basin-101/
[4] https://www.fixasphalt.com/catch-basin-repairs
[5] https://ccpia.org/catch-basin-and-manhole-inspections/

Inspection Item #3 [6]



Sediment and debris inside stormwater inlet

Inspection Item #3

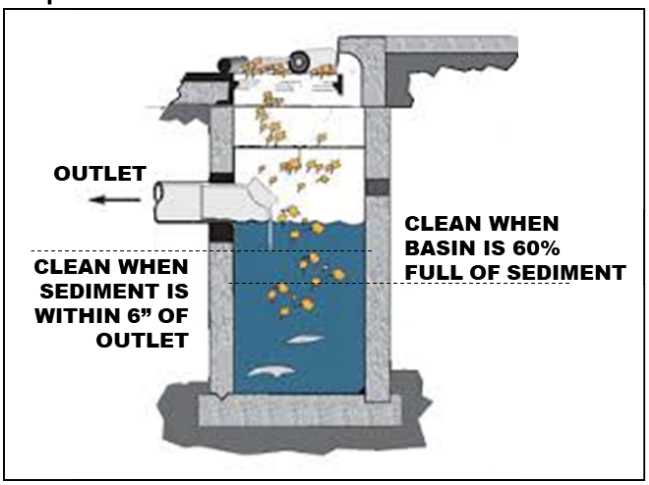

Remove sediment from a catch basin if it fills 60% of the sump or comes within 6" of a pipe.

Inspection Item #4 [7]



Example of inlet filter. Replace when filled or damaged. damaged.

Inspection Item #4 [8]



Example of an inlet filter sock, replace if

PIPES AND CULVERTS

Pipe systems are designed to convey stormwater runoff safely and effectively from inlets to various discharge points and outfalls. A culvert is a structure that channels water under an obstacle such as a roadway or railroad. These structures are subject to functional impairment by a variety of conditions, including:

- Blockage or obstruction due to build up of vegetation, debris, sediment, or other objects
- Cracks and/or joint separation
- Collapsed pipe
- Corrosion
- Root intrusion
- Lack of stabilization

[6] https://www.fixasphalt.com/catch-basin-repairs
[7] https://store.interstateproducts.com/products/Ultra-Drain-Guards/Ultra-Drain-Guard-Adjustable-Frame-Model
[8] https://www.newpig.com/pig-sediment-filter-sock/p/FLT787

Inspection Item #5 [9]



A pipe filled with sediment, inhibiting flow.

Inspection Item #5 [10]



Standing water around an inlet may indicate a blockage.

Inspection Item #6 [11]



Pipe conveyance filled with vegetation.

Inspection Item #7 [12]

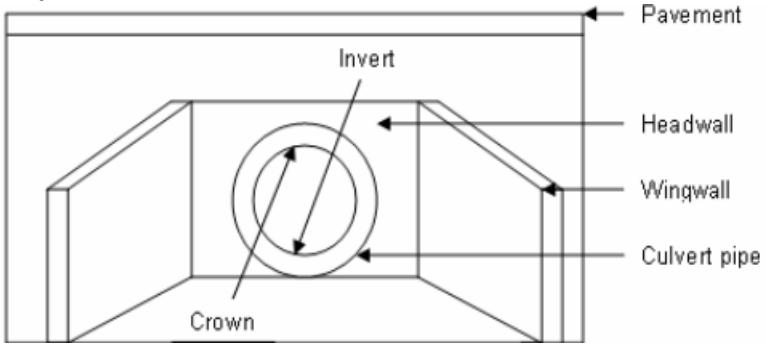

Diagram depicting various components of a culvert.

[9] Georgia Department of Transportation – Stormwater System Inspection and Maintenance Manual, March 2020
[10] https://www3.epa.gov/region9/water/npdes/stormwater-feature.html
[11] Georgia Department of Transportation – Stormwater System Inspection and Maintenance Manual, March 2020
[12] https://www.researchgate.net/figure/Components-of-a-Culvert_fig34_228685906

Inspection Item #7 [13]



A crack is the culvert headwall.

Inspection Item #7 [14]



Evidence of erosion around a culvert.

DITCHES AND SWALES

Ditches and swales serve similar functions. Both are used to convey stormwater. However, there are slight differences. A ditch is a narrow channel typically found along roads and at the edges of parking lots/driveways. A swale is like a ditch, but it is broad and shallow, and usually covered or lined with turfgrass or stone. Issues associated with these structures, which could impede their function include:

- Blockage or obstruction due to vegetation, debris, sediment, or other objects
- Erosion
- Rapidly moving water
- Lack of adequate vegetative cover for grass-lined channels

Inspection Item #8 [15]



Erosion and slumping within a drainage ditch.

Inspection Item #8 [16]



Slumping within a drainage swale.

[13] https://www.sbt-durabi.org/articles/xml/ARN0/
[14] https://lufkindailynews.com/news/local/culverts-crumbling-in-precinct-1/article_a9fed902-4379-5248-ab11-7471e2974298.html
[15] https://graniteseed.com/blog/how-to-stop-a-ditch-from-eroding/
[16] https://www.mnwcd.org/erosion-control

Inspection Item #9 [17]



Litter and debris within a ditch.

Inspection Item #9 [18]



Litter and debris within a swale.

Inspection Item #10 [19]



Cracks and joint separation in concrete channels, removal of vegetation may prevent future damage.

Inspection Item #11 [20]



Rock check dam across a channel.

Inspection Item #11 [21]



Filter sock check dams across a grass swale.

[17] https://craven.ces.ncsu.edu/2023/02/for-those-who-love-to-litter/
[18] https://www.cityoftulsa.org/government/departments/public-works/stormwater-quality/adopt-a-stream/
[19] Georgia Department of Transportation – Stormwater System Inspection and Maintenance Manual, March 2020
[20] EPA Stormwater Best Management Practice, Check Dams, December 2021
[21] EPA Stormwater Best Management Practice, Check Dams, December 2021

Inspection Item #12 [22]



Inlet to a rock-lined swale.

Inspection Item #12 [23]



Sediment accumulation at swale inlet.

END OF DOCUMENT

[22] https://www.stormwater.com/erosion-control/vegetation-management/article/13016118/inlet-protection-during-constructionand-after

[23] https://www.stormwater.com/erosion-control/vegetation-management/article/13016118/inlet-protection-during-constructionand-after

Appendix C

General Spill Response Procedures

SPILL RESPONSE AND NOTIFICATION PROCEDURES

A. Discovery of a Spill

1. Upon discovery of a spill, facility personnel should immediately assess the situation and determine if the spill is considered a "Minor" or "Major" spill. For a spill to be considered "Minor" all the following conditions must be satisfied:

    - ❖ The type of material spilled is known;
    - ❖ The spill is confined to the immediate work area;
    - ❖ The spill has not reached storm drains, sanitary sewer systems, open water, or surrounding soils;
    - ❖ The spill can be safely managed;
    - ❖ The employee can contain and clean up the spill with the PPE that is normally used in the work area;
    - ❖ The spill does not pose a serious threat of fire or an explosion; and
    - ❖ The spill does not pose conditions that are immediately dangerous to life or health.

2. If all the above conditions are met, the spill is considered "Minor". Refer to ***Section B*** of this document for appropriate response actions.

3. If all the above conditions are not met, then the spill is considered "Major". Refer to ***Section C*** of this document for appropriate response actions.

4. If a spill involves flammable liquids, ignitable vapors may be present - precautions must be taken to prevent ignition. Do not turn on or off equipment since sparks may be generated. Additionally, avoid the movement of equipment that could create static electricity. Larger spills of flammable liquids could pose a fire threat and would be considered a "Major" spill. Refer to ***Section C*** for appropriate actions.

B. Response to a "Minor" Spill

1. Identify the source of the spill and the direction in which the spill is heading.

2. Attempt to stop the spill at the source. Where applicable, the source of the spill shall be taken out of service until repairs can be made. If the spill is related to a fuel dispensing system, activate the Emergency Shut-Off (ESO) switch to prevent additional fuel disbursements.

3. If material is released outside a containment area, it is crucial that the material be contained as quickly as possible. Following proper safety procedures, use absorbent materials or diking to contain the spill. Prevent the spill from reaching storm drains, sanitary sewers, or open water. If a spill is flowing toward a drain, install temporary diking around the drain, block off the drain with a drain cover, or place absorbent material around the drain to prevent a discharge.

4. Once the spill has been stopped and contained, estimate the quantity of the spill. Consult applicable Safety Data Sheet (SDS) for material compatibility and environmental precautions. Note and follow recommendations regarding special precautions, spill response equipment, methods, or precautions. All cleanup work shall be conducted in accordance with existing safety protocols and SDS recommendations. Contact the facility Superintendent/Supervisor, or designee, for assistance if needed.

5. Recover or clean up the spilled material as much as possible. Material that cannot be reused must be discarded in accordance with state and federal regulations. Liquids absorbed by porous materials (e.g., wood, gravel, significant quantities of absorbent material, etc.) shall be placed into US DOT-approved 30-gallon or 55-gallon steel drums. Following cleanup, the container shall be secured and appropriately labeled to identify the contents and the date of the spill/cleanup. Containers shall be stored indoors and provided with secondary containment until transported off-site for disposal.

6. For spills that do not involve flammable liquids or other potential hazardous wastes, small quantities of used absorbent materials may be double bagged and disposed of along with municipal trash as long as all liquids have been absorbed (no free liquid may be present).

7. If the spilled material is a flammable liquid, corrosive liquid (pH ≤ 2 or ≥ 12.5), or other potential hazardous waste, all recovered product, impacted material, and used absorbent must be placed into a US DOT-approved containers/drums. Following cleanup, the container(s) shall be secured and appropriately labeled to identify the contents and the date of the spill/cleanup. Containers shall be stored indoors and provided with secondary containment until transported off-site for disposal. The facility Superintendent/ Supervisor, or designee shall be notified that a potential hazardous waste was released and that a waste characterization may be needed to facilitate proper disposal.

8. Surfaces that are contaminated by the spill shall be cleaned utilizing dry absorbent material. Tools and equipment that have been used in the cleanup must be decontaminated immediately after use. Decontamination water (if used) must be minimized, containerized, and disposed of properly.

9. If waste requires disposal, notify the facility Superintendent/Supervisor, or designee who will arrange for the proper characterization and disposal of any waste material. Representative sampling and analysis may be necessary to properly characterize the waste. The waste must be transported and disposed of in compliance with all applicable laws and regulations. Waste manifests, trip tickets, or bills of lading (if required) for waste disposal shall be kept on file.

10. Facility personnel shall restock/replace spill response equipment and absorbent materials used during the clean-up efforts.

11. The facility Superintendent/Supervisor, designee, or other appropriate County personnel shall be notified of the spill in accordance with ***Section D*** of this document.

C. Response to "Major" Spill

A "Major" spill is any discharge that does not meet the definition of a "Minor" spill. Any employee or contractor observing, being involved with, or recognizing a potential or actual spill of oil or other hazardous material, other than a "Minor" spill is responsible for performing the following actions:

1. If there is no danger to human health, attempt to stop and contain the spill at the source. If the spilled material is unknown, if PPE other than that which is typically used in your work area, is necessary to approach the spill area, or if assistance is required to stop the spill, do not attempt to contain the spill. If the spill is related to a fuel dispensing system, activate the Emergency Shut-Off (ESO) switch.

2. Most County employees lack the appropriate training to respond to "Major" spills. If the spill is of an unknown substance, is of a quantity that cannot be safely managed, or poses other risks beyond the training level of the employee, the employee should not attempt to contain or clean up the spill.

3. Evacuate individuals from the area and keep personnel away from the impacted area.

4. Immediately notify the facility Superintendent/Supervisor, or designee of the incident. The notified individual will determine the need for further evacuations and contact emergency response personnel (911), as necessary. *If a situation represents an immediate and grave danger to personnel, the public, structures, or other infrastructure, the individual discovering the incident may call 911 directly without first notifying facility management.*

5. The facility Superintendent/Supervisor or designee will determine if assistance from emergency response contractors is required to clean up the incident and will coordinate such spill response efforts with spill response contractors and other County agencies and first responders.

6. Facility personnel will provide assistance to emergency responders, as appropriate.

D. Reporting a Spill (Internal Notifications)

1. Once a spill is contained and cleanup operations have been initiated, the individual discovering the spill shall notify the appropriate County representatives and provide the following information:

    a) Identify the location, date, and time of the incident;
    b) Identify the type of material spilled or discharged;
    c) Estimate the quantity spilled and the rate of the spill;
    d) Identify the cause of the spill or discharge;
    e) Identify impacted media or infrastructure (soil, storm drains, open water bodies, etc.);
    f) Determine the extent of injuries involved; and
    g) Provide response measures implemented by the facility personnel.

E. Reporting a Spill (Regulatory Notifications)

State of Maryland Reporting Requirements (COMAR 26.10.01.05)

1. Upon discovery of a spill, the Responsible Person shall notify the MDE Emergency Response Division **within two (2) hours** by calling 866-633-4686. The caller shall be prepared to provide the following information:

    a) The time and date of the spill;
    b) The location and cause of the spill;
    c) The mode of transportation or type of facility involved;
    d) Type and quantity of oil spilled;
    e) Details regarding any assistance required;
    f) The name, address, and telephone number of the person making the report; and
    g) Any other pertinent information requested by the Department.

2. MDE will provide further guidance on additional responsibilities.

3. Within **ten (10) working days** of the completed removal and clean-up activities, the Responsible Person shall prepare a report using either County letterhead detailing the incident. The report shall contain the following:

    a) Date, time, and place of the spill;
    b) The amount and type of oil or hazardous substance spilled;
    c) A complete description of circumstances that contributed to the spill;
    d) A complete description of the containment and removal operations performed, including disposal sites to which oil refuse was transported;
    e) Procedures, methods, and precautions instituted to prevent the recurrence of an oil spill from the facility involved;
    f) Any other information considered necessary or required by the MDE for a complete description of the incident; and
    g) A certification that the information provided is true and correct to the knowledge of the person signing the report.

4. The completed report shall be submitted to mdeerd.mema@maryland.gov or faxed to 410-537-3932.

5. A digital copy of the completed report and any accompanying documentation shall be retained

Federal Reporting Requirements - National Response Center (40 CFR 110)

1. If any of the following criteria are met the Responsible Person shall notify the National Response Center (NRC) **within two (2) hours** of the spill discovery by calling 800-424-8802 or 202-426-2675.

    - ❖ The spill has caused a film, sheen, or discoloration of the surface water or shorelines;
    - ❖ The material spilled will violate applicable water quality standards (surface water or groundwater); or
    - ❖ The spill has caused a sludge or emulsion to be deposited beneath the surface of the water or on the shoreline.

2. At a minimum, the following information shall be provided to the NRC:

    a) Name, organization, and telephone number of reporting party;
    b) Name and address of the responsible party;
    c) Date, time, and location of the incident;
    d) Source and cause of the discharge;
    e) Type of material(s) discharged;
    f) Quantity of materials discharged;
    g) Danger or threat posed by discharge;
    h) Number and types of injuries (if any);
    i) Weather conditions at the incident location; and
    j) Other information to help emergency personnel respond to the incident.

3. If unable to report to the NRC, reports can be made to the EPA Regional Office at 800-438-2474 or the U.S. Coast Guard (USCG) at 202-372-1001. The NRC, EPA, or USCG will provide further guidance.

4. A digital record of the NRC notification and any accompanying documentation shall be retained on-site.

Federal Reporting Requirements - EPA Regional Administrator (40 CFR 112.4)

1. If the facility where the spill occurred is regulated under 40 CFR 112 and is required to have a Spill Prevention, Control, and Countermeasures (SPCC) Plan, the Responsible Person shall report the spill to the EPA Region III Administrator when any of the following criteria are met:

   - ❖ More than 1,000 gallons of oil is discharged to navigable waters or adjoining shorelines in a single incident; or
   - ❖ More than 42 gallons of oil is discharged to navigable waters or adjoining shorelines in each of two incidents occurring within any twelve-month period.

2. The report shall be made in writing **within 60 days** of the spill and shall contain:

   a) Name and location of the facility;
   b) Owner/operator name;
   c) Maximum storage/handling capacity of the facility and normal daily throughput;
   d) Corrective actions and countermeasures taken;
   e) Adequate description of the facility including maps, and flow diagrams;
   f) Cause of the discharge to navigable waters, including a failure analysis;
   g) Additional preventative measures taken or planned to minimize discharge reoccurrence; and
   h) Other information required by the EPA Regional III Administrator.

3. The report shall be submitted to the EPA Regional Administrator at the following address:

   EPA Regional Administrator
   US EPA Region 3
   1650 Arch Street (3RA00)
   Philadelphia, PA 19103-2029

4. A copy of the report shall be retained in the facility SPCC Plan.

Appendix D

Training Records

GOOD HOUSEKEEPING PLAN (GHP)
TRAINING ATTENDANCE LOG

FACILITY NAME: _____

DATE	NAME *(PRINT)*	SIGNATURE

By signing I affirm that I have completed the required annual training; and I am aware of and understand my responsibilities under this Plan.

GOOD HOUSEKEEPING PLAN (GHP)

Perryman Water Treatment Plant
1538 Perryman Road
Aberdeen, MD 21001

June 30, 2025

TABLE OF CONTENTS

1.0 BACKGROUND & INTRODUCTION 1
1.1 Objectives 1
1.2 Potential Stormwater Pollutants 1
2.0 RESPONSIBILITIES 3
2.1 GHP Implementation 3
2.2 Plan Review and Modification 3
2.3 Inspections 3
2.3.1 GHP Site Inspections 3
2.3.2 Conveyance System Inspections 4
2.4 Training 4
3.0 BEST MANAGEMENT PRACTICES (BMPs) 5
3.1 Applicability of BMP Fact Sheets 5
3.2 BMP Fact Sheets 5

List of Tables

TABLE 1-1 POTENTIAL STORMWATER POLLUTANTS AND THEIR SOURCES 2

List of BMP Fact Sheets

GH-01 - Waste Management
GH-02 - Vehicle and Equipment Storage
GH-03 - Vehicle/Equipment Refueling
GH-04 - Vehicle Maintenance
GH-05 - Vehicle/Equipment Washing
GH-06 - Material Storage
GH-07 - Aboveground Storage Tanks
GH-08 - Resident Drop-Off Centers
GH-09 - Stockpiles
GH-10 - Deicing Materials

Appendices

Appendix A: GHP Site Inspection Checklist
Appendix B: GHP Stormwater Conveyance Inspection Checklist
Appendix C: General Spill Response Procedures
Appendix D: Training Records

List of Acronyms

AST	-	Aboveground Storage Tank
BMP	-	Best Management Practice
CFR	-	Code of Federal Regulations
GHP	-	Good Housekeeping Plan
MDE	-	Maryland Department of the Environment
MS4	-	Municipal Separate Storm Sewer System
NPDES	-	National Pollutant Discharge Elimination System
SPCC	-	Spill Prevention, Control, and Countermeasure Plan

1.0 BACKGROUND & INTRODUCTION

Polluted stormwater runoff has the potential to enter the County's storm sewer systems (referred to as a municipal separate storm sewer system or MS4), and then discharge, untreated, into local water bodies. To address this potential stormwater pollution, the County is required to obtain a NPDES permit from the Maryland Department of the Environment (MDE). The NPDES Permit requires the County to take actions to prevent stormwater pollution, maintain storm sewer systems, monitor stormwater discharges, and develop and implement comprehensive management programs to minimize the discharge of pollutants from the storm sewer system.

To comply with Part IV.D.4.b of the County's Phase I MS4 Permit, the County must develop, implement, and maintain a Good Housekeeping Plan (GHP) for certain County-owned properties not required to be covered under Maryland's General Permit for Discharges from Stormwater Associated with Industrial Activities *(General Permit 12-SWA / 20-SW).*

To support this effort, a *"Good Housekeeping Plan Applicability Certification"* has been developed to evaluate and document if a specific County-owned facility is subject to the GHP requirements. The *"GHP Applicability Certification"* includes the following ten (10) potential stormwater polluting activities. If any of the covered activities are performed at the facility, then that facility is required to implement a site-specific GHP. The GHP will include each of the potential stormwater polluting activities identified in the *"GHP Applicability Certification"* and corresponding pollution prevention procedures.

- Waste Management
- Vehicle and Equipment Storage
- Vehicle/Equipment Refueling
- Vehicle Maintenance
- Vehicle/Equipment Washing
- Material Storage
- Aboveground Storage Tanks
- Resident Drop-Off Center
- Stockpiles
- Deicing Materials

1.1 Objectives

The GHP was developed to outline suitable practices, procedures, and protocols, or Best Management Practices ("BMPs") for reducing and/or preventing stormwater pollution associated with operations at covered County-owned properties. The intent of the pollution prevention procedures included in the GHP is to limit the release of materials with the potential to impact stormwater, this includes reducing or eliminating (to the extent practical):

- The occurrence of spills and leaks;
- The accidental dumping or release of materials;
- The accumulation of waste, trash, debris, unused parts/equipment, etc.;
- The exposure of hazardous materials to precipitation/run-off;
- Stormwater run-off contamination by improperly stored materials; and/or
- Illicit discharges to the storm drain system.

1.2 Potential Stormwater Pollutants

Table 1-1 on the following page provides a list of common potential pollutants that may result from the GHP-regulated activities identified above. Understanding the sources of these pollutants can help in achieving the goals and objectives of the GHP program.

TABLE 1-1 POTENTIAL STORMWATER POLLUTANTS AND THEIR SOURCES

		Waste Management	Vehicle/Equipment Storage	Vehicle/Equipment Refueling	Vehicle Maintenance	Vehicle/Equipment Washing	Material Storage	Aboveground Storage Tanks	Resident Drop-Off Center	Stockpiles	Deicing Materials
Pollutants	**Sources**	**Associated GHP Activity**									
Sediment	Land disturbance; erosion; paved surfaces; material stockpiles; waste storage; salt/abrasive application	X				X	X		X	X	X
Hydrocarbons *(petroleum compounds)*	Leaking vehicle and equipment; vehicle and equipment cleaning; spills; improper storage; maintenance activities; scrap metal disposal; improper disposal	X	X	X	X	X	X	X	X		
Metals	Vehicle brake and tire wear; vehicle/equipment exhaust; batteries; galvanized metal; paint and wood preservatives; fuels, pesticides, and cleaners; vehicle fueling, maintenance, and washing; industrial waste	X	X	X	X	X	X	X	X		
Toxic Chemicals	Pesticide application; improper chemical storage; leaks and spills from storage containers; leaking vehicles; maintenance activities	X	X		X	X	X	X	X		
Chlorides	De-Icing chemicals										X
Trash/Debris	Improper waste storage and disposal; leaking trash containers; littering; poor housekeeping	X	X				X		X		
Nutrients (nitrogen and Phosphorus)	Fertilizers; malfunctioning septic systems; sewer overflows; animal/pet waste; vehicle washing; decaying grass and leaves; leaking trash containers; atmospheric deposition	X				X	X		X		

2.0 RESPONSIBILITIES

2.1 GHP Implementation

A separate GHP is required for each covered facility. The following individual *(identified by name and/or title)* is accountable for the administration and implementation of the GHP at this facility and has the authority to commit the necessary resources to implement this Plan.

_____

Name and/or Title of Responsible Person

The Responsible Person listed above shall ensure that facility personnel involved in any GHP-covered activities identified in this Plan, are provided with access to, and are familiar with, the contents of this Plan.

2.2 Plan Review and Modification

The *"GHP Applicability Certification"* completed for this facility must be reviewed and updated once every permit term, or within one (1) year of substantial changes to a facility's operations that could reasonably contribute to stormwater pollution. Any newly constructed/acquired facility must be assessed within one (1) year of initiating operations at the facility. The facility's GHP must be amended and reissued to the facility within one (1) year of any changes to the facility's *"GHP Applicability Certification"*.

When warranted, the BMP Fact Sheets provided in Section 3.0 may need to be updated or revised. At the same time, additional BMP Facts Sheets may be added. The need for such updates or modifications will be at the discretion of the County's GHP Program Administrator.

2.3 Inspections

The County's MS4 permit requires each facility covered by a GHP to have the following:

1. Written procedures for annually assessing County properties to prevent the discharge of pollutants, spills, and leaks into the County's storm sewer system; and

2. Written procedure for performing stormwater conveyance system inspections and for removing debris that may cause clogging, backups, and flooding.

To meet these requirements, each facility that is covered by a GHP will be required to complete routine site inspections and stormwater conveyance system inspections as detailed below. Facility management will be responsible for ensuring the necessary inspections are completed within the required timeframes, that corrective actions (if needed) are performed, and that records of inspections and completed corrective actions are maintained for at least five (5) years.

2.3.1 GHP Site Inspections

The GHP Site Inspection will be performed to ensure that each GHP-covered facility is being properly maintained and that there are no visible signs of pollutants entering the stormwater system. GHP facilities shall utilize the *"GHP Site Inspection Checklist"*, provided in ***Appendix A*** to complete the required inspection. At a minimum, each facility is to be inspected every five (5) years.

2.3.2 Conveyance System Inspections

Stormwater conveyance systems are generally comprised of curbs and gutters, catch basins, inlet structures, swales, channels, piping, culverts, detention ponds, outfalls, or other structures that are used to collect, contain, and convey stormwater runoff.

The unimpeded movement of stormwater through conveyance systems is critical in avoiding backups and flooding, which can impede facility operations and damage property. Routine inspections and preventative care of stormwater conveyance systems can ensure these systems function as intended and prevent the need for costly and time-consuming repairs and retrofits.

Each GHP-covered facility is required to conduct routine stormwater conveyance system inspections to ensure the free flow of stormwater within the conveyance systems. GHP-covered facilities shall utilize the *"GHP Stormwater Conveyance System Inspection Checklist"*, provided in ***Appendix B*** to complete the required inspections. At a minimum, facility conveyance system inspections are to be conducted every five (5) years.

2.4 Training

As part of the GHP requirements within the County's Phase I NPDES permit, annual training must be provided to all appropriate staff and contractors. Such training shall be provided to any individuals responsible for implementing the GHP, performing the required inspections, or involved in any of the GHP-covered activities identified in this Plan. The required training shall focus on the duties and responsibilities assigned to site personnel in implementing the GHP and the best management practices (BMPs) prescribed in this Plan for preventing, reducing, and eliminating the discharge of pollutants during facility activities.

The County's MS4/GHP Program Coordinator will be responsible for developing the required training and disseminating it to GHP-covered facilities. Each GHP-covered facility will be responsible for identifying staff/contractors who must attend annual training, ensuring identified staff complete the required training, and maintaining records that document training dates and attendees. Training records and other documentation shall be maintained in ***Appendix D*** of this Plan.

3.0 BEST MANAGEMENT PRACTICES (BMPs)

This section contains a BMP Fact Sheet for each of the ten (10) GHP-regulated activities. The County's operations are not limited to the BMPs contained within this document; nor is the County required to implement all of the pollution prevention measures identified within each BMP Fact Sheet. The County should select and implement those measures that are applicable and have the greatest potential for reducing stormwater pollution.

The BMP Fact Sheets contained within this document offer recommended protocols for a particular activity. These pollution prevention measures are considered non-structural BMPs with a focus on source control of potential pollutants.

3.1 Applicability of BMP Fact Sheets

The *"GHP Applicability Certification"* completed for this facility has identified the activities conducted at this facility that require coverage under this Plan. Each of the BMP Fact Sheets shall be marked as to whether they are applicable or not applicable to this facility. The Applicable/Not Applicable indicator on each BMP Fact Sheet can be revised in response to changes in operations at the facility.

3.2 BMP Fact Sheets

BMP Fact Sheets can be found on the following pages. For the sake of consistency, the general outline of a BMP Fact Sheet will be as follows:

- Identification of GHP-covered activity.
- Applicability of the BMP Fact Sheet to the facility.
- A general description of the concern the activity poses to stormwater.
- Recommended pollution prevention measures for reducing/eliminating stormwater pollution.
- Additional sources of information, if applicable.

WASTE MANAGEMENT

Not Applicable ☐ Applicable ☒

CONCERN

Improperly managed waste can allow trash and debris to be washed into storm drains which poses a concern to water quality, marine life, and public health. It also has the potential to create obstructions in the drainage system, which can lead to backups and flooding. Additionally, improper storage and handling of waste materials can allow pollutants including oils and greases, toxic and chemical compounds (including nutrients), bacteria, metals, and other potentially hazardous wastes to enter waterways.

POLLUTION PREVENTION MEASURES

General *(applicable to all waste management activities)*

1) Provide suitable containers, preferably with working covers, to collect waste materials.
2) Ensure that appropriate waste containers are available in areas where waste is generated.
3) Provide a cover over waste storage areas, if feasible.
4) Avoid positioning waste receptacles near storm drains, water bodies, or areas of concentrated runoff.
5) Ensure that lids to waste containers *(if present)* are kept closed to prevent the intrusion of precipitation and prevent trash from blowing out of the receptacle.
6) For waste receptacles, which do not have lids and could leak, containers should be inspected regularly and controls (e.g., containment, spill response, etc.) shall be enacted whenever leaks or dry-weather discharges are observed.
7) Routinely inspect waste containers, roll-offs, compactors, and other waste receptacles for the presence of excessive waste accumulation and overflowing containers.
8) Ensure that wastes accumulating on the ground are placed in a suitable waste container.
9) Ensure that wastes are removed from the facility regularly by a licensed and contracted vendor.
10) Repair or replace damaged waste container lids.

Trash Compactors

1) Routinely inspect trash compactors for malfunctioning equipment or leaking hydraulic oil and provide the appropriate spill response if leaking equipment is encountered.
2) Regularly inspect compactors for leaking fluids and implement appropriate controls such as spill response/cleanup, collection or diversion of released fluids, providing secondary containment, etc. whenever leaks or dry-weather discharges are observed.

Scrap Metal Collection Containers

1) Avoid placing oily or grease-covered items in uncovered scrap metal recycling collection containers. If needed, wrap oily/greasy items in plastic garbage bags before placing them in the collection container.

Hazardous/Universal Wastes

1) Ensure that hazardous waste and universal wastes (e.g., batteries, bulbs, etc.) are collected and stored indoors or within covered collection containers.
2) Verify that hazardous/universal waste collection containers are in good condition, not leaking, and compatible with the wastes being stored.

Street Sweeping / Vactor Truck Material Storage

1) Do not site storage areas near storm drains, open water bodies, or areas of concentrated runoff.
2) Install sediment control devices (e.g. silt fence, silt socks, hay bales, etc.) around the staging area. Inspect these controls regularly and replace them as needed.
3) Cover the materials staging area, if feasible.
4) Provide oil-absorbent booms if necessary to control oily discharge. Inspect and replace booms regularly.
5) The staging area should be checked periodically for evidence of sediment migrating outside of the staging area. Material that has migrated out of the staging area should be promptly swept and returned to the staging area or disposed of.

Waste Cooking Oil/Grease

1) Maintain storage containers indoors or within a covered location, if feasible.
2) Storage containers shall be secured to prevent infiltration of precipitation and accidental/intentional spills or releases.
3) Carefully transfer waste oil/grease to the appropriate collection container to avoid spills.
4) Maintain suitable spill response equipment near collection containers. Immediately clean up any spilled oil/grease. Keep the exterior of the collection container clean and free of spilled oil/grease.
5) Provide secondary containment for collection containers, if feasible.

VEHICLE AND EQUIPMENT STORAGE

Not Applicable ☒ Applicable ☐

CONCERN

Vehicles and equipment may be stored onsite to support various County operations (e.g., construction, maintenance, snow removal, roadside assistance, mass transit, mowing, etc.). Examples of County owned and operated vehicles and equipment stored onsite at any given time include but are not limited to, the following: cars, trucks, buses, emergency response vehicles, garbage trucks, heavy equipment (backhoes, frontend loaders, etc.), forklifts, towable generators, portable light stands, and roadside equipment. Vehicle and equipment storage is considered a pollutant source due to the potential for incidental releases of petroleum products, lubricants, and various automotive fluids.

POLLUTION PREVENTION MEASURES

1) When possible/practical, store vehicles and equipment inside or under cover to prevent exposure to precipitation.
2) If vehicles or equipment must be stored outside, store vehicles/equipment in designated areas away from areas of concentrated runoff, storm drains, and other stormwater conveyances.
3) Vehicles and equipment shall be staged on impervious (asphalt or concrete) surfaces;
4) Keep truck beds clean and ensure potential stormwater pollutants are stored in closed containers, covered, or otherwise protected from stormwater exposure.
5) Conduct routine visual inspections of vehicles and equipment for the presence of leaks and respond accordingly.
6) Leaking vehicles/equipment should be moved inside or under cover. At a minimum, drip pans or absorbent pads shall be used to contain the leak until the vehicle/equipment can be relocated and the leak addressed.
7) Drain all fluids from wrecked or heavily damaged vehicles and equipment before storage.
8) Have an adequate supply of appropriate spill response equipment readily available and clean up all spills and leaks immediately utilizing dry cleaning techniques (e.g. absorbents and brooms).
9) Train staff in spill response so that incidents are addressed in a timely fashion.
10) Do not wash down areas where leaks have collected on ground surfaces; use dry cleaning methods such as granular absorbents and brooms.

VEHICLE AND EQUIPMENT REFUELING

Not Applicable ☒ Applicable ☐

CONCERN

Refueling activities associated with County vehicles and equipment can result in a discharge of fuel (gasoline and diesel fuel), which has the potential to enter the storm drain system and/or a nearby waterway. Such releases can introduce hydrocarbons, metals, and other toxic chemicals to stormwater runoff.

POLLUTION PREVENTION MEASURES

General Procedures *(applicable to all refueling activities)*

1) Routinely *(at least daily)* inspect the fuel dispensing area for any spills or leaks.
2) Routinely inspect fuel dispensing equipment looking for leaking or damaged equipment. Damaged or malfunctioning equipment shall be taken out of service until it has been repaired.
3) Fuels will only be dispensed into authorized vehicles, equipment, and approved containers.
4) Vehicle operators must remain outside of their vehicles and in attendance of fuel dispensers at all times while dispensing fuel.
5) Third-party contractors must be trained in proper refueling procedures and pollution prevention.
6) Do not utilize a foreign object to keep the dispenser nozzle in the open position. If present, a “hold-open” latch on the nozzle may be used.
7) Do not “top off” a vehicle’s fuel tank once the dispenser nozzle’s automatic shut-off has been activated. Topping off tanks may result in spills. Post signs in fueling areas warning vehicle operators against "topping off" of vehicle fuel tanks.
8) After refueling has stopped, allow several seconds to pass before removing the nozzle and returning it to the dispenser. This will prevent incidental dripping from the nozzle.
9) Employees refueling vehicles shall note the location of the “Emergency Fuel Shut Off” switch, to be used to stop the flow of fuel to the dispensers in the event of a release or emergency.
10) Have an adequate supply of appropriate spill response equipment readily available and clean up all spills immediately utilizing dry cleaning techniques (e.g. absorbents and brooms).
11) Immediately clean up and dispose of used absorbent material.
12) Do not wash down fueling areas; use dry cleaning methods such as granular absorbents and brooms.
13) Conduct refueling activities over impervious (e.g. concrete) surfaces. Place drip pans or absorbent pads under the nozzle if fueling occurs over a permeable surface such as grass or soil.
14) Install oil control devices in storm drains that may receive contaminated runoff from fueling areas.
15) Cover fueling areas with a canopy or roof to prevent direct contact with rainfall. Direct run-on away from fueling areas and collect fueling area run-off in a dead-end sump or oil-water separator.

Mobile Equipment Refueling

1) Refuel equipment on an impervious surface, downgradient of, and at the farthest practical distance from any storm drain, stormwater conveyance, stormwater management feature, or waterway.
2) Utilize secondary containment when refueling equipment (when practical).
3) Ensure mobile refuelers are parked in designated locations and away from areas of concentrated run-off, storm drains, and other stormwater conveyances.
4) Ensure that procedures are in place and that staff is properly trained in spill response/cleanup so that leaks and spills are addressed appropriately and promptly.

VEHICLE MAINTENANCE

GH-04

Not Applicable ☒ Applicable ☐

CONCERN

Vehicle and equipment maintenance can impact the water quality of nearby waterways by exposing stormwater to various pollutants including petroleum hydrocarbons, solvents, antifreeze/coolants, used oil, lubricating oil, grease, brake fluid, metals, and various chemicals. Additionally, vehicles that are wrecked or awaiting repair can be a source of pollution if leaking fluids are not properly controlled.

POLLUTION PREVENTION MEASURES

1) Conduct vehicle and equipment maintenance activities indoors.
2) Make sure incoming vehicles and equipment are inspected for leaking fluids and oil.
3) Move leaking vehicles or equipment indoors or under cover as soon as possible. At a minimum, a drip pan or absorbent pads shall be utilized to contain the leak until the vehicle/equipment can be relocated and the leak addressed.
4) Avoid performing maintenance on vehicles in close proximity to exterior doorways, which may allow released fluids to migrate outdoors.
5) Have an adequate supply of appropriate spill response equipment readily available and clean up all spills and leaks immediately utilizing dry cleaning techniques (e.g. absorbents and brooms).
6) Keep maintenance areas neat and well organized. Remove dirt, debris, and used absorbent regularly.
7) Inspect maintenance areas as well as maintenance equipment on a routine basis.
8) Store vehicles, parts, and generated wastes indoors or off the ground and under cover whenever possible. When practical, provide secondary containment.
9) Promptly transfer used fluids to the proper waste container; do not leave full drip pans or other open containers around the shop. Empty and clean drip pans and containers regularly.
10) Waste liquids shall not be poured into floor drains, sinks, outdoor storm drain inlets, or other storm drains or sewer connections. Liquid wastes are to be collected in properly labeled containers and disposed of by a licensed waste hauler or other appropriate method.
11) Store leaking batteries in a sealed container and provide secondary containment, if feasible.
12) Clean all parts indoors utilizing a self-contained parts washer.
13) Do not hose down indoor service areas to storm drains or areas where it can seep into groundwater.
14) Maintain floor drains in good working order and inspect for proper function on a routine basis. Consider plugging floor drains that discharge to the storm sewer.
15) Ensure oil/water separators (if present) are maintained in proper working order and are checked on a routine basis for the presence of oil.
16) If maintenance work must be performed outdoors, adhere to the following requirements:
    - Conduct maintenance activities over an impervious surface, away from stormwater inlets.
    - Cover outdoor maintenance areas and direct stormwater run-on away from the area.
    - Use drip pans or drop cloths underneath the equipment to catch leaks and drips.
    - Have an adequate supply of appropriate spill response equipment readily available.
    - Clean all spills immediately using dry cleaning techniques (e.g. absorbents and brooms).
    - Avoid performing maintenance activities during precipitation events.
    - Limit temporary outdoor maintenance activities to a single shift/day if additional time is needed to cover the work area at the end of each day/shift.

BMP Fact Sheet

VEHICLE AND EQUIPMENT WASHING

GH-05

Not Applicable ☒ Applicable ☐

CONCERN

Vehicle and equipment washing can generate washwater that contains oil, grease, organic compounds, surfactants, phosphates, metals, and suspended solids. If vehicles/equipment are washed outdoors on impervious surfaces, dirty washwater can contaminate stormwater that ends up in waterways. Washing equipment over pervious surfaces can allow washwater to seep into the ground contaminating groundwater.

POLLUTION PREVENTION MEASURES

1) Vehicle and equipment washing should only be conducted in designated indoor wash bays that capture and recycle washwater to the extent practical.
2) Wastewater from the washing facility should be discharged to the sanitary sewer system under the authorization of a wastewater discharge permit issued by the local municipal authority.
3) The floor of indoor vehicle wash bays should be completely bermed or sloped to collect wash water and prevent migration outdoors.
4) No other activities (e.g., fluid changes, repairs, material storage) shall be performed in wash areas.
5) Keep the wash bay neat and well organized. Sweep or pick up all trash and debris daily or as needed.
6) Solid materials accumulated on vehicles or in vehicle beds (e.g. salt, soil, grass, etc.) shall be knocked off or otherwise removed from the vehicle (while inside the wash bay) prior to washing. Solid materials shall be collected and disposed of properly.
7) For vehicles too large to completely fit in the wash bays, only the portion of the vehicle physically located in the confines of the wash bay shall be cleaned. The vehicle shall then be rotated to allow for the remaining portion of the vehicle to be washed.
8) Use nozzles that automatically turn off water when not in use and consider high-pressure, low-volume sprays.
9) Avoid detergents as much as possible. If detergents are necessary, use a biodegradable, phosphate-free detergent.
10) If discharging to an oil-water separator, use a non-emulsifying detergent.
11) Inspect floor drain systems, holding tanks, and conveyances associated with designated wash areas regularly. Maintain oil/water separators and/or process flowthrough separators on a routine basis.
12) Use commercial car washes when vehicle or equipment washing cannot be performed onsite without causing impacts to stormwater.
13) If washing must occur onsite and outdoors, use a designated impervious area that is marked with posted signs indicating proper washing procedures. This area must be bermed to contain the wash water and graded to direct the wash water to the sanitary sewer, an oil-water separator, a holding tank, a dead-end sump, or other containment area. Captured water shall be disposed of properly.
14) Avoid steam cleaning and engine/undercarriage washing which can produce high pollutant concentrations. If steam cleaning or engine washing is necessary, perform such cleanings within isolated indoor areas, and ensure wash water is treated and discharged to the sanitary sewer (if permitted to do so) or captured for off-site disposal.
15) Train staff in proper washing techniques and how to confine washing to designated wash areas.
16) Consider alternatives to washing such as using air to blow grass and debris from small equipment, wet-wiping equipment with rags, etc.

BMP Fact Sheet

MATERIAL STORAGE

GH-06

Not Applicable ☒ Applicable ☐

CONCERN

The storage of petroleum products, chemicals, paints, cleaners, pesticides, fertilizers, bags of erodible materials like sand, cement, and soil, and other potential pollutants can negatively impact surface waters through the accidental releases or leaching of materials into stormwater. Unprotected outdoor storage areas can generate a wide range of stormwater pollutants, such as sediment, nutrients, toxic materials, and petroleum products.

POLLUTION PREVENTION MEASURES

1) Whenever possible, store containers (e.g. drums, bins, bags, cans, and totes) indoors or under cover to limit exposure to stormwater.
2) Designate specific areas for material delivery and storage that are away from heavy traffic areas, storm drains, stormwater conveyances, and areas of concentrated run-off.
3) Designated outdoor storage areas should be paved or consist of an impervious surface.
4) Provide secondary containment for materials whenever possible or required per regulation.
5) Store materials on pallets to prevent stormwater run-on from coming into contact with materials, prevent container corrosion, and allow for better leak detection. Pallets must be in good condition and promptly replaced once damaged or deteriorated.
6) Stack containers according to the manufacturer's recommendations to avoid damage.
7) Immediately replace damaged, corroded, or leaking containers.
8) Ensure all storage containers are clearly labeled with their contents.
9) Keep containers tightly sealed after use.
10) Maintain an accurate inventory of hazardous substances and limit on-site storage to that which is necessary to support facility operations.
11) Keep storage areas neat and well organized; remove debris and unneeded material promptly.
12) If empty drums are stored outdoors, ensure that all openings are equipped with caps to prevent water intrusion and that the drum/storage area is labeled "Empty Drums".
13) Have an adequate supply of appropriate spill response equipment readily available and clean up all spills and releases immediately utilizing dry cleaning techniques (e.g. sweeping/absorbents).
14) Clean up all migrating dry materials upon discovery and address the source of the release.
15) Provide perimeter controls (e.g., berms, rock check dams, etc.) for erodible stockpiles of materials such as mulch, sand, and gravel to prevent migration into the stormwater system.
16) Routinely inspect material storage areas for leaks, material migration, and damaged or corroded containers. Ensure that secondary containment and other perimeter controls are in satisfactory condition.
17) Additional visual inspections of outdoor storage areas should be conducted after significant rainfall events (i.e., greater than 0.5 inches).

BMP Fact Sheet

ABOVEGROUND STORAGE TANKS

GH-07

Not Applicable ☒ Applicable ☐

CONCERN

Aboveground storage tanks (ASTs) may be used to store fuels, automotive fluids, chemicals, or deicing fluids. Leaks from tanks, piping, or other equipment and releases during fluid transfers can all impact stormwater quality. It is critical to maintain ASTs in good working condition to prevent spills and/or releases from occurring. Improperly managed storage tanks can cause significant environmental impacts.

POLLUTION PREVENTION MEASURES

General *(applicable to all storage tanks)*

1) ASTs should be installed and maintained in accordance with COMAR 26.10 and applicable fire codes.
2) ASTs should be provided with secondary containment, whenever feasible or required by regulation.
3) Secondary containment areas shall be maintained clean and dry; drain valves must be kept closed; accumulated liquid shall only be discharged if there are no visible signs of impacts, and in accordance with applicable regulations.
4) Inspect ASTs monthly to identify any leaking or malfunctioning equipment and ensure tanks are functioning as designed.
5) ASTs shall be equipped with a form of liquid-level detection (i.e. sight gauge, electronic monitoring).
6) ASTs shall be equipped with overfill prevention (i.e. overfill alarm and/or overfill prevention valve).
7) Tanks and piping should be protected from vehicle impact via barriers, bollards, guard rails, etc.
8) Install ASTs on solid foundations over impervious surfaces, and away from areas of concentrated run-off, storm drains, and other stormwater conveyances.
9) Properly label all storage tanks (e.g., contents, capacity, etc.).
10) Keep remote fills and fill port spill buckets clean and dry.
11) Keep fill ports, gates, and tank areas secured when not in use to prevent fuel theft and tampering.
12) Have an adequate supply of appropriate spill response equipment readily available and clean up all spills and leaks immediately utilizing dry cleaning techniques (e.g. absorbents and brooms).
13) Facilities that maintain 1,320 gallons or more of aboveground oil products shall prepare and implement a Spill Prevention, Control, and Countermeasure (SPCC) Plan, per 40 CFR 112.
14) Facilities that maintain 1,000 gallons or more of used oil or 10,000 gallons or more of virgin oil in ASTs shall obtain an Individual Oil Operations Permit from the MDE, per COMAR 26.10.01.09.
15) Owners/Operators of facilities that maintain more than 2,500 gallons of oil in ASTs are required to register each AST with MDE, per COMAR 26.10.01.10.

Bulk Fluid Transfers (Deliveries)

1) All bulk fluid transfer operations shall be performed under the direct supervision of knowledgeable County personnel. At no time shall the delivery vehicle or delivery vehicle operator be unsupervised.
2) The product level within the tank must be measured and available capacity verified before delivery.
3) Deliveries shall be made via fill ports equipped with catch basins to capture drips and spills.
4) Ensure an adequate supply of appropriate spill response equipment is readily available.
5) Post signs in delivery area displaying proper delivery procedures and emergency contact information.

ABOVEGROUND STORAGE TANKS

Used Oil Tanks

1) County personnel must verify the level of product in used oil tanks prior to filling.
2) Used oil tanks should only be filled via designated fill ports. Pumping used oil into the tank via a closed piping system is preferred to manually pouring used oil into the tank.

Brine Tanks

1) If multiple tanks are located onsite, the tanks should be plumbed to ensure that the complete failure of one tank will not drain all the tanks in the system (tanks must be isolated).
2) Minimize seeping and leaking at fittings by properly supporting piping and fittings, using flexible connectors or hoses to reduce stress, and installing corrosion-resistant fittings.
3) Consider placing hoses in non-permeable trenches or using drip-less nozzles to reduce repeated small spills.

RESIDENT DROP-OFF CENTER

Not Applicable ☒ Applicable ☐

CONCERN

Resident Drop-Off Centers are publicly accessible facilities where residents can drop off used automotive fluids (i.e. oil or antifreeze), municipal waste, recyclable, and/or organic waste, typically free of charge. Improper transfer or management of the waste materials can allow a number of pollutants including oils and greases, toxic and chemical compounds, nutrients, metals, and other wastes to enter waterways.

POLLUTION PREVENTION MEASURES

General *(applicable to all materials collected)*

1) Clearly identify waste materials accepted by the facility, and clearly mark designated collection areas.
2) Waste material should be inspected by a County representative, prior to disposal.
3) Avoid positioning waste receptacles near storm drains, water bodies, or areas of concentrated runoff.
4) When practical, receiving areas should be covered.
5) Do not allow containers to overflow or waste materials to accumulate on the ground.

Automotive Fluid Collection

1) Used oil, antifreeze, and automotive fluid receiving areas should be on impervious surfaces, covered, and provided with secondary containment, which shall be maintained clean and dry.
2) Provide lidded waste receptacles in the receiving area for the public to dispose of empty containers. Waste receptacles shall be emptied routinely and waste disposed of properly.
3) Collection areas shall be inspected daily and all trash and spilled liquids appropriately cleaned up.
4) The available capacity of waste liquid collection containers shall be routinely verified and waste removals scheduled, as needed.
5) Install appropriate controls to prohibit the overfilling of waste fluid collection containers.
6) Place appropriate spill response equipment in close proximity to drop-off areas.
7) If aboveground tanks are used to collect waste fluids, refer to BMP Fact Sheet GHP-07 (Aboveground Storage Tanks) for additional recommendations.

Organic Debris Collection

1) Routinely transfer collected organic debris/waste to a composting or disposal facility.
2) Do not permit composting of organic waste except at properly designed and permitted facilities.
3) Enact controls to prevent leaves and other windblown debris from entering stormwater inlets.

Municipal Waste / Recyclables Collection

1) Refer to BMP Fact Sheet GHP-01 (Waste Management) for additional recommendations.

BMP Fact Sheet

STOCKPILES

GH-09

Not Applicable ☒ Applicable ☐

CONCERN

The County may stockpile various erodible materials, the type of material can vary depending on the needs of the County. Stockpiled material may include soil, sand, millings, slag, cinders, sawdust, landscaping bark, compost, etc. Exposed stockpiles can easily erode due to wind or precipitation and contribute suspended solids to stormwater runoff.

POLLUTION PREVENTION MEASURES

1) Maintain stockpiles of erodible materials within roofed storage buildings or covered storage bins, if feasible. If not, stockpile material on an impervious surface and cover the stockpile.
2) Temporary stockpiles should be placed on an impermeable membrane (tarp) for quick clean-up.
3) Locate stockpiles away from drain inlets, catch basins, swales, areas of concentrated stormwater flow, water bodies, and environmentally sensitive areas.
4) Divert stormwater flows away from/around the stockpiles using a diversion device (e.g., temporary swale, berm, sandbags, or diversion fence).
5) Cover temporary stockpiles of erodible materials with a tarp that has been adequately secured. The covers must be in place at all times when the stockpile is not in active use.
6) When accessing a portion of the stockpile, only remove a section of the cover to minimize exposure to the elements.
7) Use barriers to isolate stockpiled materials from high-traffic areas to prevent tracking of materials.
8) Sweep (do not wash or hose down) in front of material stockpile storage areas at regular intervals, following loading and unloading activities, and during times of heavy use.
9) If material is observed migrating from the stockpile, clean up all migrated material upon discovery and provide additional controls to reduce migration from the stockpile. If such measures are ineffective implement controls to capture pollutants before they migrate off-site (e.g. silt fencing, inlet filters, filter socks, at-grade inlet protection, etc.).
10) Minimize material stockpile inventory based on historical inventory/usage records and public safety operational needs.
11) Cold mix asphalt shall be stored on and covered with plastic sheeting or comparable material.
12) Routinely inspect outdoor material stockpiles to verify existing controls are functioning properly and for signs of erosion or material transport.

BMP Fact Sheet

DEICING MATERIALS

GH-10

Not Applicable ☒ Applicable ☐

CONCERN

When salt and other de-icing materials are stored outside and uncovered, they have a much higher risk of being eroded and transported offsite by stormwater. Improper de-icing material and sand storage may result in stormwater runoff containing elevated concentrations of sodium chloride and dissolved solids. Sodium chloride (e.g., road salt) is an effective deicer but can be highly corrosive to stormwater facilities. Smaller waterways are at a higher risk to increases in salinity, which can threaten aquatic species. Additionally, runoff containing sodium chloride has the potential to reach drinking water sources where small traces can adversely impact public health.

POLLUTION PREVENTION MEASURES

1) Bagged de-icing chemicals must be stored indoors. If stored outdoors bags must be kept on pallets (off the ground) and covered at all times. Bags must be intact without holes or openings.
2) Bulk de-icing materials shall be stored under cover and on an impervious surface.
3) Bulk salt storage areas/buildings shall not be overfilled so that salt spills out beyond the entrance of the storage area/building.
4) Bulk salt storage areas/buildings shall be maintained in a structurally sound condition and in a way that prevents the release of salt and the infiltration of stormwater. Deicing materials should not touch the sides of metal storage containers.
5) Barriers such as berms, gates, knee walls, tarps, and/or straw bales shall be placed at the entrances of bulk salt storage areas/buildings to prohibit the migration of salt and prevent contact with precipitation/stormwater runoff.
6) Routinely inspect storage areas for migrating materials or deterioration of containment structures. Sweep up all migrating materials upon discovery and repair the source of the migrating pollutant.
7) Loading areas should be constructed of impervious material and covered or enclosed, to the extent practical, to reduce potential contact with stormwater.
8) Minimize the distance de-icing materials are transported during loading/unloading activities.
9) Prevent and/or minimize the spillage of salt and de-icing materials during loading/unloading activities, immediately clean spilled or tracked materials.
10) Sweeping of storage and loading/unloading areas shall be conducted immediately following loading/unloading activities.
11) Do not store de-icing materials (bulk or bagged) over or immediately adjacent to drains or waterways.
12) Control site drainage by diverting stormwater run-on away from storage/loading areas using appropriate measures (e.g., curbing, berms, etc.).
13) Slope storage/loading areas to direct salt-contaminated runoff to an appropriate collection area, and in a manner that prevents the runoff from reaching adjacent soil or surface waters.
14) Excess salt shall be removed from salt handling equipment (trucks, spreaders, etc.) following use/prior to storage. All cleaning shall occur on an impervious surface, which is sloped or curbed to contain any washwater and direct it to a collection area for recycling or proper disposal.

Appendix A

GHP Site Inspection Checklist

GOOD HOUSEKEEPING PLAN (GHP)
SITE INSPECTION CHECKLIST

Facility Name: _____ **Inspection Date:** _____

Inspector Name: _____ **Inspector Signature:** _____

- The intent of this inspection is to ensure that the site is being properly maintained and that there are no visible signs of pollutants entering the stormwater system.
- **A shaded status box designates an item in a non-compliant status. Please provide an explanation for all non-compliant items and subsequently document all corrective actions performed.**
- Retain the completed checklists for five (5) years.

Item	Status			CORRECTIVE ACTIONS/COMMENTS *Items which cannot be corrected immediately must be reported to the GHP/NPDES Program Manager*
	Yes	No	N/A	
GENERAL HOUSEKEEPING				
1. Are exterior areas of the facility free of accumulated trash, debris, and unneeded materials?				
2. Are stormwater drains and inlets free from debris, sediment, and evidence of spills/releases?				
3. Is the facility free from signs of erosion?				
4. Are paved surfaces free of accumulated sediment?				
5. Is spill response equipment available in maintenance areas, fueling areas, hazardous material storage areas, and/or other required areas?				
6. Are spill kits and absorbent materials clearly labeled and accessible (i.e. items are not piled on top of or in front of spill kits)?				
7. Are spill kits secured from being stolen or misused?				
8. Is there a labeled container present for the disposal of used spill cleanup material?				

GOOD HOUSEKEEPING PLAN (GHP)
SITE INSPECTION CHECKLIST

Item	Status			CORRECTIVE ACTIONS/COMMENTS *Items which cannot be corrected immediately must be reported to the GHP/NPDES Program Manager*
	Yes	No	N/A	
9. Does spill response equipment (i.e. spill kits, absorbent materials) need to be replenished?				
WASTE MANAGEMENT				
10. Are areas around solid waste containers/roll-offs/compactors free of excessive trash accumulation or overflowing containers?				
11. Are areas around solid waste containers/roll-offs/compactors free of visible evidence (i.e. leaks, staining) of ongoing stormwater pollution?				
12. Are scrap metal containers in good order and free from evidence of leaking oil/grease?				
13. For dumpsters, roll-offs, and other waste receptacles, where leaks are observed, have appropriate controls (e.g. containment, spill response, etc.) been enacted?				
14. Are the lids (if present) to solid waste containers closed?				
15. Is street sweeping/vactor waste being managed appropriately (i.e. no evidence of material migration)?				
16. Is waste cooking grease managed appropriately (i.e. no evidence of spilled material or excessive staining)?				
VEHICLE & EQUIPMENT STORAGE				
17. Are stored vehicles/equipment free from leaks?				
18. If leaks are present, are they being managed appropriately (drip pan or other methods in place to capture released liquids)?				
19. Are storage areas free of visible evidence of chronic leaks/spills (i.e. significant staining)?				

GOOD HOUSEKEEPING PLAN (GHP)
SITE INSPECTION CHECKLIST

Item	Status			CORRECTIVE ACTIONS/COMMENTS *Items which cannot be corrected immediately must be reported to the GHP/NPDES Program Manager*
	Yes	No	N/A	
VEHICLE & EQUIPMENT REFUELING				
20. Are the areas around refueling areas free from evidence of spills or leaks?				
21. Are refueling areas free of used absorbent material that has not been swept/cleaned up?				
22. Do fuel dispensers and hoses appear to be in good working order and well-maintained?				
VEHICLE MAINTENANCE				
23. Is there any indication that vehicle maintenance activities are being conducted outdoors?				
24. Is there any indication that vehicle maintenance activities are contributing to stormwater pollution?				
VEHICLE & EQUIPMENT WASHING				
25. If performed on-site, does all vehicle/equipment washing occur indoors?				
26. Is wash water collected and disposed of properly?				
27. Is there any indication that vehicle/equipment wash water is being released to stormwater conveyances or pervious areas?				
MATERIAL STORAGE				
28. Are all outdoor storage areas free from visible signs of leaks or spilled material?				
29. Are material storage containers in good condition?				

GOOD HOUSEKEEPING PLAN (GHP)
SITE INSPECTION CHECKLIST

Item	Status			CORRECTIVE ACTIONS/COMMENTS *Items which cannot be corrected immediately must be reported to the GHP/NPDES Program Manager*
	Yes	No	N/A	
30. Are drums, totes, and other containers (that are <u>not</u> empty) stored off the ground and covered, or stored indoors?				
31. Are liquid-containing drums/totes located outdoors provided with secondary containment?				
32. Are containers that are located outdoors equipped with closed lids except when material transfers are occurring?				
33. Are materials, which could impact stormwater, stored away from heavy traffic areas, or protected from vehicle collisions?				
34. Are chemical storage containers properly labeled?				
35. If empty drums are stored outside, are all openings equipped with caps to prevent water intrusion?				
ABOVEGROUND STORAGE TANKS				
36. Are all storage tanks, and surrounding areas free from visible signs of leaks or spilled material?				
37. Do storage tanks appear to be in good working order (e.g. free of obvious signs of damage or malfunctioning equipment)?				
38. Are remote fills associated with tanks free of liquid and debris?				
RESIDENT DROP-OFF CENTERS				
39. Are waste collection areas clearly identified?				
40. Are used oil/antifreeze collection tanks, containment structures, and surrounding areas free from visible signs of leaks or spilled material?				

GOOD HOUSEKEEPING PLAN (GHP)
SITE INSPECTION CHECKLIST

Item	Status			CORRECTIVE ACTIONS/COMMENTS *Items which cannot be corrected immediately must be reported to the GHP/NPDES Program Manager*
	Yes	No	N/A	
41. Do used oil/antifreeze collection tanks appear to be in good working order (e.g. free of obvious signs of damage or malfunctioning equipment)?				
42. Are empty used oil/antifreeze containers being collected and disposed of in the trash?				
43. Are areas around waste/recyclables containers free of excessive trash accumulation or overflowing containers?				
44. Are areas around waste/recyclables containers free of visible evidence (i.e. leaks, staining) of ongoing stormwater pollution?				
45. Are organic debris collection areas free of visible evidence of ongoing stormwater pollution (e.g. leaves and debris in stormwater conveyances)?				
STOCKPILES				
46. Are material piles, including salt, soil, sand, and millings isolated (i.e. covered, bermed, etc.) to prevent stormwater run-on and run-off?				
47. Are areas surrounding material piles (e.g. salt, soil, sand, millings, etc.) free of tracked or migrated material?				
DEICING MATERIALS				
48. Are all deicing materials stored indoors or undercover?				
49. Are salt storage structures in good condition (e.g. no evidence of material escaping or stormwater infiltration)?				
50. Is the salt loading area clean?				

GOOD HOUSEKEEPING PLAN (GHP)
SITE INSPECTION CHECKLIST

Item	Status			CORRECTIVE ACTIONS/COMMENTS *Items which cannot be corrected immediately must be reported to the GHP/NPDES Program Manager*
	Yes	No	N/A	
51. If deicing materials are tarped, is the tarp secure and covering the entire pile?				
52. Are bags of salt stored indoors, or off the ground and covered?				

ADDITIONAL COMMENTS:

Appendix B

GHP Stormwater Conveyance System Inspection Checklist

GOOD HOUSEKEEPING PLAN (GHP)
STORMWATER CONVEYANCE SYSTEM INSPECTION CHECKLIST

Facility Name: _____ **Inspection Date:** _____

Inspector Name: _____ **Inspector Signature:** _____

- The intent of this inspection is to ensure the free flow of stormwater within on-site conveyance systems and prevent damage/flooding.
- **If maintenance is needed, please provide an explanation, and document all corrective actions performed.**
- **Inspections shall include visually accessible infrastructure only; at no time shall inspection personnel enter a confined space.**
- Retain the completed checklists for five (5) years.

Item	Item Checked (Y/N/NA)	Maintenance Needed (Y/N)	CORRECTIVE ACTIONS/COMMENTS *Items which cannot be corrected immediately must be reported to the GHP/NPDES Program Manager*
CATCH BASINS / INLETS			
1. Look for debris and sediment blocking catch basin grates. If found, remove.			
2. Look for damage or cracks to the frame, grate, basin walls or bottom. If found, schedule repairs or replacement.			
3. Look for sediment and debris in the catch basin sump. If sediment fills 60% of the sump or comes within 6” of a pipe it should be scheduled for cleaning.			
4. If any type of filtering device is present, verify that the filter is not clogged, torn, or damaged; clean if clogged, replace if damaged.			
PIPES / CULVERTS			
5. Look for evidence of clogged piping (e.g. visual obstructions, standing water within manholes/inlets structures, etc.). If found, remove or schedule cleaning.			
6. Verify vegetation growth, if present, does not impede water flow. If it does, mow, cut back, or remove.			

GOOD HOUSEKEEPING PLAN (GHP)

STORMWATER CONVEYANCE SYSTEM INSPECTION CHECKLIST

Item	Item Checked (Y/N/NA)	Maintenance Needed (Y/N)	CORRECTIVE ACTIONS/COMMENTS *Items which cannot be corrected immediately must be reported to the GHP/NPDES Program Manager*
7. Inspect for damaged piping, inlets, outlets, headwalls, wingwalls, or excessive erosion. If found, make or schedule repairs.			
DITCHES / TRAPEZOIDAL SWALES			
8. Check for erosion, slumping, or undercutting. If found, make or schedule repairs.			
9. Look for trash and sediment accumulation. Remove all trash and remove sediment if it will impede water flow or clog downstream structures.			
10. Verify vegetation growth does not impede water flow. If it does, mow, cut back, or remove. Remove any trees or shrubs growing within the ditch.			
11. Check the integrity of check dams, filter socks, or other flow dissipation/filtering devices within the ditch or swale. Perform or schedule service if they are clogged, damaged, or deteriorated.			
12. Check inlets and outlets for debris accumulation, damage, or erosion. If found, make or schedule repairs.			

ADDITIONAL COMMENTS:

GUIDANCE DOCUMENT
GOOD HOUSEKEEPING PLAN - STORMWATER CONVEYANCE INSPECTIONS

INTRODUCTION

Maintaining catch basins, stormwater inlets, and other stormwater conveyance structures on a regular basis will remove pollutants, prevent backups, and ensure the system functions as intended to avoid flooding.

Each GHP-covered facility is required to conduct routine stormwater conveyance system inspections to ensure the free flow of stormwater within the conveyance system(s). The GHP includes a *"GHP Stormwater Conveyance System Inspection Checklist"*, to be used when completing the required inspections. This document provides additional background and guidance to aid facility personnel in completing the inspections.

CATCH BASINS / INLETS

Catch basins and inlets are all points for stormwater to enter storm drain systems. These structures are typically part of a larger conveyance system with many interconnected components where the impairment of one component can compromise the functionality of the larger system. Inlets and catch basins are subject to functional impairment by a variety of conditions, including:

- Structural damage including from vehicles and plows
- Cracks/joint separation at piping (inlet and outlet) connections
- Leaking due to cracks and joint separation
- Missing or damaged grates and grate frames
- Corrosion
- Blockage caused by debris, sediment, vegetation, or other objects

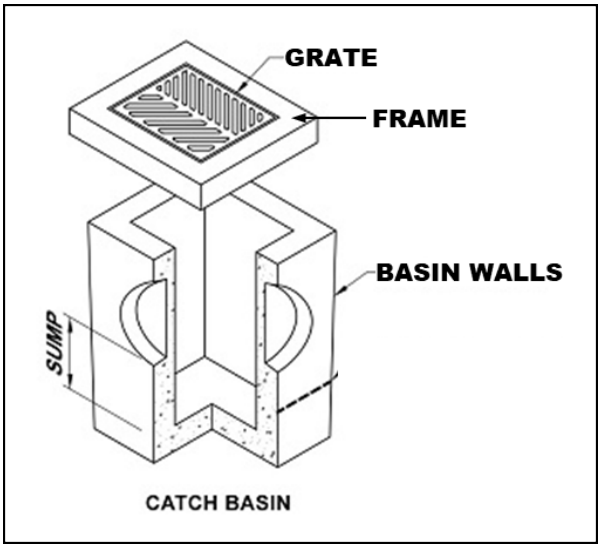

Figure 1 – Catch Basin Diagram

The following photos provide additional information related to the various inspection items, including examples of typical issues that may be encountered. The photo numbers correspond to the inspection checklist item number.

Inspection Item #1 [1]



Debris and sediment blocking inlet/catch basin grate.

Inspection Item #2 [2]



Damaged Grate

Inspection Item #2 [3]



Damaged Frame

Inspection Item #2 [4]



Failing brick walls with a stormwater inlet.

Inspection Item #2 [5]



Failing asphalt surrounding the inlet

[1] Grand Valley State University - https://www.gvsu.edu/groundswell/clogged-storm-drains-71.htm
[2] Georgia Department of Transportation – Stormwater System Inspection and Maintenance Manual, March 2020
[3] https://catchbasinauthority.ca/catch-basin-101/
[4] https://www.fixasphalt.com/catch-basin-repairs
[5] https://ccpia.org/catch-basin-and-manhole-inspections/

Inspection Item #3 [6]



Sediment and debris inside stormwater inlet

Inspection Item #3

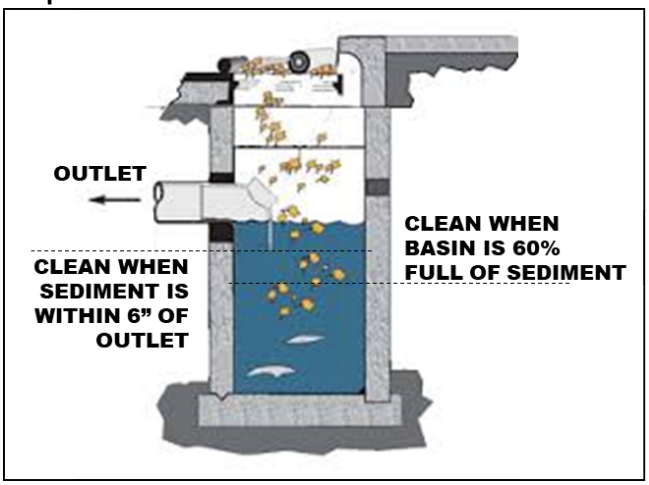

Remove sediment from a catch basin if it fills 60% of the sump or comes within 6" of a pipe.

Inspection Item #4 [7]



Example of inlet filter. Replace when filled or damaged. damaged.

Inspection Item #4 [8]



Example of an inlet filter sock, replace if

PIPES AND CULVERTS

Pipe systems are designed to convey stormwater runoff safely and effectively from inlets to various discharge points and outfalls. A culvert is a structure that channels water under an obstacle such as a roadway or railroad. These structures are subject to functional impairment by a variety of conditions, including:

- Blockage or obstruction due to build up of vegetation, debris, sediment, or other objects
- Cracks and/or joint separation
- Collapsed pipe
- Corrosion
- Root intrusion
- Lack of stabilization

[6] https://www.fixasphalt.com/catch-basin-repairs
[7] https://store.interstateproducts.com/products/Ultra-Drain-Guards/Ultra-Drain-Guard-Adjustable-Frame-Model
[8] https://www.newpig.com/pig-sediment-filter-sock/p/FLT787

Inspection Item #5 [9]



A pipe filled with sediment, inhibiting flow.

Inspection Item #5 [10]



Standing water around an inlet may indicate a blockage.

Inspection Item #6 [11]



Pipe conveyance filled with vegetation.

Inspection Item #7 [12]

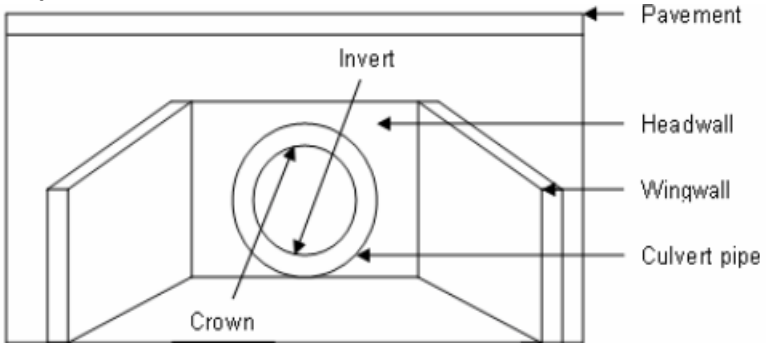

Diagram depicting various components of a culvert.

[9] Georgia Department of Transportation – Stormwater System Inspection and Maintenance Manual, March 2020
[10] https://www3.epa.gov/region9/water/npdes/stormwater-feature.html
[11] Georgia Department of Transportation – Stormwater System Inspection and Maintenance Manual, March 2020
[12] https://www.researchgate.net/figure/Components-of-a-Culvert_fig34_228685906

Inspection Item #7 [13]



A crack is the culvert headwall.

Inspection Item #7 [14]



Evidence of erosion around a culvert.

DITCHES AND SWALES

Ditches and swales serve similar functions. Both are used to convey stormwater. However, there are slight differences. A ditch is a narrow channel typically found along roads and at the edges of parking lots/driveways. A swale is like a ditch, but it is broad and shallow, and usually covered or lined with turfgrass or stone. Issues associated with these structures, which could impede their function include:

- Blockage or obstruction due to vegetation, debris, sediment, or other objects
- Erosion
- Rapidly moving water
- Lack of adequate vegetative cover for grass-lined channels

Inspection Item #8 [15]



Erosion and slumping within a drainage ditch.

Inspection Item #8 [16]



Slumping within a drainage swale.

[13] https://www.sbt-durabi.org/articles/xml/ARN0/
[14] https://lufkindailynews.com/news/local/culverts-crumbling-in-precinct-1/article_a9fed902-4379-5248-ab11-7471e2974298.html
[15] https://graniteseed.com/blog/how-to-stop-a-ditch-from-eroding/
[16] https://www.mnwcd.org/erosion-control

Inspection Item #9 [17]



Litter and debris within a ditch.

Inspection Item #9 [18]



Litter and debris within a swale.

Inspection Item #10 [19]



Cracks and joint separation in concrete channels, removal of vegetation may prevent future damage.

Inspection Item #11 [20]



Rock check dam across a channel.

Inspection Item #11 [21]



Filter sock check dams across a grass swale.

[17] https://craven.ces.ncsu.edu/2023/02/for-those-who-love-to-litter/
[18] https://www.cityoftulsa.org/government/departments/public-works/stormwater-quality/adopt-a-stream/
[19] Georgia Department of Transportation – Stormwater System Inspection and Maintenance Manual, March 2020
[20] EPA Stormwater Best Management Practice, Check Dams, December 2021
[21] EPA Stormwater Best Management Practice, Check Dams, December 2021

Inspection Item #12 [22]



Inlet to a rock-lined swale.

Inspection Item #12 [23]



Sediment accumulation at swale inlet.

END OF DOCUMENT

[22] https://www.stormwater.com/erosion-control/vegetation-management/article/13016118/inlet-protection-during-constructionand-after

[23] https://www.stormwater.com/erosion-control/vegetation-management/article/13016118/inlet-protection-during-constructionand-after

Appendix C

General Spill Response Procedures

SPILL RESPONSE AND NOTIFICATION PROCEDURES

A. Discovery of a Spill

1. Upon discovery of a spill, facility personnel should immediately assess the situation and determine if the spill is considered a "Minor" or "Major" spill. For a spill to be considered "Minor" all the following conditions must be satisfied:

    - ❖ The type of material spilled is known;
    - ❖ The spill is confined to the immediate work area;
    - ❖ The spill has not reached storm drains, sanitary sewer systems, open water, or surrounding soils;
    - ❖ The spill can be safely managed;
    - ❖ The employee can contain and clean up the spill with the PPE that is normally used in the work area;
    - ❖ The spill does not pose a serious threat of fire or an explosion; and
    - ❖ The spill does not pose conditions that are immediately dangerous to life or health.

2. If all the above conditions are met, the spill is considered "Minor". Refer to ***Section B*** of this document for appropriate response actions.

3. If all the above conditions are not met, then the spill is considered "Major". Refer to ***Section C*** of this document for appropriate response actions.

4. If a spill involves flammable liquids, ignitable vapors may be present - precautions must be taken to prevent ignition. Do not turn on or off equipment since sparks may be generated. Additionally, avoid the movement of equipment that could create static electricity. Larger spills of flammable liquids could pose a fire threat and would be considered a "Major" spill. Refer to ***Section C*** for appropriate actions.

B. Response to a "Minor" Spill

1. Identify the source of the spill and the direction in which the spill is heading.

2. Attempt to stop the spill at the source. Where applicable, the source of the spill shall be taken out of service until repairs can be made. If the spill is related to a fuel dispensing system, activate the Emergency Shut-Off (ESO) switch to prevent additional fuel disbursements.

3. If material is released outside a containment area, it is crucial that the material be contained as quickly as possible. Following proper safety procedures, use absorbent materials or diking to contain the spill. Prevent the spill from reaching storm drains, sanitary sewers, or open water. If a spill is flowing toward a drain, install temporary diking around the drain, block off the drain with a drain cover, or place absorbent material around the drain to prevent a discharge.

4. Once the spill has been stopped and contained, estimate the quantity of the spill. Consult applicable Safety Data Sheet (SDS) for material compatibility and environmental precautions. Note and follow recommendations regarding special precautions, spill response equipment, methods, or precautions. All cleanup work shall be conducted in accordance with existing safety protocols and SDS recommendations. Contact the facility Superintendent/Supervisor, or designee, for assistance if needed.

5. Recover or clean up the spilled material as much as possible. Material that cannot be reused must be discarded in accordance with state and federal regulations. Liquids absorbed by porous materials (e.g., wood, gravel, significant quantities of absorbent material, etc.) shall be placed into US DOT-approved 30-gallon or 55-gallon steel drums. Following cleanup, the container shall be secured and appropriately labeled to identify the contents and the date of the spill/cleanup. Containers shall be stored indoors and provided with secondary containment until transported off-site for disposal.

6. For spills that do not involve flammable liquids or other potential hazardous wastes, small quantities of used absorbent materials may be double bagged and disposed of along with municipal trash as long as all liquids have been absorbed (no free liquid may be present).

7. If the spilled material is a flammable liquid, corrosive liquid (pH ≤ 2 or ≥ 12.5), or other potential hazardous waste, all recovered product, impacted material, and used absorbent must be placed into a US DOT-approved containers/drums. Following cleanup, the container(s) shall be secured and appropriately labeled to identify the contents and the date of the spill/cleanup. Containers shall be stored indoors and provided with secondary containment until transported off-site for disposal. The facility Superintendent/ Supervisor, or designee shall be notified that a potential hazardous waste was released and that a waste characterization may be needed to facilitate proper disposal.

8. Surfaces that are contaminated by the spill shall be cleaned utilizing dry absorbent material. Tools and equipment that have been used in the cleanup must be decontaminated immediately after use. Decontamination water (if used) must be minimized, containerized, and disposed of properly.

9. If waste requires disposal, notify the facility Superintendent/Supervisor, or designee who will arrange for the proper characterization and disposal of any waste material. Representative sampling and analysis may be necessary to properly characterize the waste. The waste must be transported and disposed of in compliance with all applicable laws and regulations. Waste manifests, trip tickets, or bills of lading (if required) for waste disposal shall be kept on file.

10. Facility personnel shall restock/replace spill response equipment and absorbent materials used during the clean-up efforts.

11. The facility Superintendent/Supervisor, designee, or other appropriate County personnel shall be notified of the spill in accordance with ***Section D*** of this document.

C. Response to "Major" Spill

A "Major" spill is any discharge that does not meet the definition of a "Minor" spill. Any employee or contractor observing, being involved with, or recognizing a potential or actual spill of oil or other hazardous material, other than a "Minor" spill is responsible for performing the following actions:

1. If there is no danger to human health, attempt to stop and contain the spill at the source. If the spilled material is unknown, if PPE other than that which is typically used in your work area, is necessary to approach the spill area, or if assistance is required to stop the spill, do not attempt to contain the spill. If the spill is related to a fuel dispensing system, activate the Emergency Shut-Off (ESO) switch.

2. Most County employees lack the appropriate training to respond to "Major" spills. If the spill is of an unknown substance, is of a quantity that cannot be safely managed, or poses other risks beyond the training level of the employee, the employee should not attempt to contain or clean up the spill.

3. Evacuate individuals from the area and keep personnel away from the impacted area.

4. Immediately notify the facility Superintendent/Supervisor, or designee of the incident. The notified individual will determine the need for further evacuations and contact emergency response personnel (911), as necessary. *If a situation represents an immediate and grave danger to personnel, the public, structures, or other infrastructure, the individual discovering the incident may call 911 directly without first notifying facility management.*

5. The facility Superintendent/Supervisor or designee will determine if assistance from emergency response contractors is required to clean up the incident and will coordinate such spill response efforts with spill response contractors and other County agencies and first responders.

6. Facility personnel will provide assistance to emergency responders, as appropriate.

D. Reporting a Spill (Internal Notifications)

1. Once a spill is contained and cleanup operations have been initiated, the individual discovering the spill shall notify the appropriate County representatives and provide the following information:

    a) Identify the location, date, and time of the incident;
    b) Identify the type of material spilled or discharged;
    c) Estimate the quantity spilled and the rate of the spill;
    d) Identify the cause of the spill or discharge;
    e) Identify impacted media or infrastructure (soil, storm drains, open water bodies, etc.);
    f) Determine the extent of injuries involved; and
    g) Provide response measures implemented by the facility personnel.

E. Reporting a Spill (Regulatory Notifications)

State of Maryland Reporting Requirements (COMAR 26.10.01.05)

1. Upon discovery of a spill, the Responsible Person shall notify the MDE Emergency Response Division **within two (2) hours** by calling 866-633-4686. The caller shall be prepared to provide the following information:

    a) The time and date of the spill;
    b) The location and cause of the spill;
    c) The mode of transportation or type of facility involved;
    d) Type and quantity of oil spilled;
    e) Details regarding any assistance required;
    f) The name, address, and telephone number of the person making the report; and
    g) Any other pertinent information requested by the Department.

2. MDE will provide further guidance on additional responsibilities.

3. Within **ten (10) working days** of the completed removal and clean-up activities, the Responsible Person shall prepare a report using either County letterhead detailing the incident. The report shall contain the following:

    a) Date, time, and place of the spill;
    b) The amount and type of oil or hazardous substance spilled;
    c) A complete description of circumstances that contributed to the spill;
    d) A complete description of the containment and removal operations performed, including disposal sites to which oil refuse was transported;
    e) Procedures, methods, and precautions instituted to prevent the recurrence of an oil spill from the facility involved;
    f) Any other information considered necessary or required by the MDE for a complete description of the incident; and
    g) A certification that the information provided is true and correct to the knowledge of the person signing the report.

4. The completed report shall be submitted to mdeerd.mema@maryland.gov or faxed to 410-537-3932.

5. A digital copy of the completed report and any accompanying documentation shall be retained

Federal Reporting Requirements - National Response Center (40 CFR 110)

1. If any of the following criteria are met the Responsible Person shall notify the National Response Center (NRC) **within two (2) hours** of the spill discovery by calling 800-424-8802 or 202-426-2675.

    - ❖ The spill has caused a film, sheen, or discoloration of the surface water or shorelines;
    - ❖ The material spilled will violate applicable water quality standards (surface water or groundwater); or
    - ❖ The spill has caused a sludge or emulsion to be deposited beneath the surface of the water or on the shoreline.

2. At a minimum, the following information shall be provided to the NRC:

    a) Name, organization, and telephone number of reporting party;
    b) Name and address of the responsible party;
    c) Date, time, and location of the incident;
    d) Source and cause of the discharge;
    e) Type of material(s) discharged;
    f) Quantity of materials discharged;
    g) Danger or threat posed by discharge;
    h) Number and types of injuries (if any);
    i) Weather conditions at the incident location; and
    j) Other information to help emergency personnel respond to the incident.

3. If unable to report to the NRC, reports can be made to the EPA Regional Office at 800-438-2474 or the U.S. Coast Guard (USCG) at 202-372-1001. The NRC, EPA, or USCG will provide further guidance.

4. A digital record of the NRC notification and any accompanying documentation shall be retained on-site.

Federal Reporting Requirements - EPA Regional Administrator (40 CFR 112.4)

1. If the facility where the spill occurred is regulated under 40 CFR 112 and is required to have a Spill Prevention, Control, and Countermeasures (SPCC) Plan, the Responsible Person shall report the spill to the EPA Region III Administrator when any of the following criteria are met:

   - ❖ More than 1,000 gallons of oil is discharged to navigable waters or adjoining shorelines in a single incident; or
   - ❖ More than 42 gallons of oil is discharged to navigable waters or adjoining shorelines in each of two incidents occurring within any twelve-month period.

2. The report shall be made in writing **within 60 days** of the spill and shall contain:

   a) Name and location of the facility;
   b) Owner/operator name;
   c) Maximum storage/handling capacity of the facility and normal daily throughput;
   d) Corrective actions and countermeasures taken;
   e) Adequate description of the facility including maps, and flow diagrams;
   f) Cause of the discharge to navigable waters, including a failure analysis;
   g) Additional preventative measures taken or planned to minimize discharge reoccurrence; and
   h) Other information required by the EPA Regional III Administrator.

3. The report shall be submitted to the EPA Regional Administrator at the following address:

   EPA Regional Administrator
   US EPA Region 3
   1650 Arch Street (3RA00)
   Philadelphia, PA 19103-2029

4. A copy of the report shall be retained in the facility SPCC Plan.

Appendix D

Training Records

GOOD HOUSEKEEPING PLAN (GHP)
TRAINING ATTENDANCE LOG

FACILITY NAME: _____

DATE	NAME *(PRINT)*	SIGNATURE

By signing I affirm that I have completed the required annual training; and I am aware of and understand my responsibilities under this Plan.

GOOD HOUSEKEEPING PLAN (GHP)

Plumtree Pumping Station
205 W. Ring Factory Road
Bel Air, MD 21014

June 30, 2025

TABLE OF CONTENTS

1.0 BACKGROUND & INTRODUCTION 1
1.1 Objectives 1
1.2 Potential Stormwater Pollutants 1
2.0 RESPONSIBILITIES 3
2.1 GHP Implementation 3
2.2 Plan Review and Modification 3
2.3 Inspections 3
2.3.1 GHP Site Inspections 3
2.3.2 Conveyance System Inspections 4
2.4 Training 4
3.0 BEST MANAGEMENT PRACTICES (BMPs) 5
3.1 Applicability of BMP Fact Sheets 5
3.2 BMP Fact Sheets 5

List of Tables

TABLE 1-1 POTENTIAL STORMWATER POLLUTANTS AND THEIR SOURCES 2

List of BMP Fact Sheets

GH-01 - Waste Management
GH-02 - Vehicle and Equipment Storage
GH-03 - Vehicle/Equipment Refueling
GH-04 - Vehicle Maintenance
GH-05 - Vehicle/Equipment Washing
GH-06 - Material Storage
GH-07 - Aboveground Storage Tanks
GH-08 - Resident Drop-Off Centers
GH-09 - Stockpiles
GH-10 - Deicing Materials

Appendices

Appendix A: GHP Site Inspection Checklist
Appendix B: GHP Stormwater Conveyance Inspection Checklist
Appendix C: General Spill Response Procedures
Appendix D: Training Records

List of Acronyms

AST	-	Aboveground Storage Tank
BMP	-	Best Management Practice
CFR	-	Code of Federal Regulations
GHP	-	Good Housekeeping Plan
MDE	-	Maryland Department of the Environment
MS4	-	Municipal Separate Storm Sewer System
NPDES	-	National Pollutant Discharge Elimination System
SPCC	-	Spill Prevention, Control, and Countermeasure Plan

1.0 BACKGROUND & INTRODUCTION

Polluted stormwater runoff has the potential to enter the County's storm sewer systems (referred to as a municipal separate storm sewer system or MS4), and then discharge, untreated, into local water bodies. To address this potential stormwater pollution, the County is required to obtain a NPDES permit from the Maryland Department of the Environment (MDE). The NPDES Permit requires the County to take actions to prevent stormwater pollution, maintain storm sewer systems, monitor stormwater discharges, and develop and implement comprehensive management programs to minimize the discharge of pollutants from the storm sewer system.

To comply with Part IV.D.4.b of the County's Phase I MS4 Permit, the County must develop, implement, and maintain a Good Housekeeping Plan (GHP) for certain County-owned properties not required to be covered under Maryland's General Permit for Discharges from Stormwater Associated with Industrial Activities *(General Permit 12-SWA / 20-SW).*

To support this effort, a *"Good Housekeeping Plan Applicability Certification"* has been developed to evaluate and document if a specific County-owned facility is subject to the GHP requirements. The *"GHP Applicability Certification"* includes the following ten (10) potential stormwater polluting activities. If any of the covered activities are performed at the facility, then that facility is required to implement a site-specific GHP. The GHP will include each of the potential stormwater polluting activities identified in the *"GHP Applicability Certification"* and corresponding pollution prevention procedures.

- Waste Management
- Vehicle and Equipment Storage
- Vehicle/Equipment Refueling
- Vehicle Maintenance
- Vehicle/Equipment Washing
- Material Storage
- Aboveground Storage Tanks
- Resident Drop-Off Center
- Stockpiles
- Deicing Materials

1.1 Objectives

The GHP was developed to outline suitable practices, procedures, and protocols, or Best Management Practices ("BMPs") for reducing and/or preventing stormwater pollution associated with operations at covered County-owned properties. The intent of the pollution prevention procedures included in the GHP is to limit the release of materials with the potential to impact stormwater, this includes reducing or eliminating (to the extent practical):

- The occurrence of spills and leaks;
- The accidental dumping or release of materials;
- The accumulation of waste, trash, debris, unused parts/equipment, etc.;
- The exposure of hazardous materials to precipitation/run-off;
- Stormwater run-off contamination by improperly stored materials; and/or
- Illicit discharges to the storm drain system.

1.2 Potential Stormwater Pollutants

Table 1-1 on the following page provides a list of common potential pollutants that may result from the GHP-regulated activities identified above. Understanding the sources of these pollutants can help in achieving the goals and objectives of the GHP program.

TABLE 1-1 POTENTIAL STORMWATER POLLUTANTS AND THEIR SOURCES

		Waste Management	Vehicle/Equipment Storage	Vehicle/Equipment Refueling	Vehicle Maintenance	Vehicle/Equipment Washing	Material Storage	Aboveground Storage Tanks	Resident Drop-Off Center	Stockpiles	Deicing Materials
Pollutants	**Sources**	**Associated GHP Activity**									
Sediment	Land disturbance; erosion; paved surfaces; material stockpiles; waste storage; salt/abrasive application	X				X	X		X	X	X
Hydrocarbons *(petroleum compounds)*	Leaking vehicle and equipment; vehicle and equipment cleaning; spills; improper storage; maintenance activities; scrap metal disposal; improper disposal	X	X	X	X	X	X	X	X		
Metals	Vehicle brake and tire wear; vehicle/equipment exhaust; batteries; galvanized metal; paint and wood preservatives; fuels, pesticides, and cleaners; vehicle fueling, maintenance, and washing; industrial waste	X	X	X	X	X	X	X	X		
Toxic Chemicals	Pesticide application; improper chemical storage; leaks and spills from storage containers; leaking vehicles; maintenance activities	X	X		X	X	X	X	X		
Chlorides	De-Icing chemicals										X
Trash/Debris	Improper waste storage and disposal; leaking trash containers; littering; poor housekeeping	X	X				X		X		
Nutrients (nitrogen and Phosphorus)	Fertilizers; malfunctioning septic systems; sewer overflows; animal/pet waste; vehicle washing; decaying grass and leaves; leaking trash containers; atmospheric deposition	X				X	X		X		

2.0 RESPONSIBILITIES

2.1 GHP Implementation

A separate GHP is required for each covered facility. The following individual *(identified by name and/or title)* is accountable for the administration and implementation of the GHP at this facility and has the authority to commit the necessary resources to implement this Plan.

_____

Name and/or Title of Responsible Person

The Responsible Person listed above shall ensure that facility personnel involved in any GHP-covered activities identified in this Plan, are provided with access to, and are familiar with, the contents of this Plan.

2.2 Plan Review and Modification

The *"GHP Applicability Certification"* completed for this facility must be reviewed and updated once every permit term, or within one (1) year of substantial changes to a facility's operations that could reasonably contribute to stormwater pollution. Any newly constructed/acquired facility must be assessed within one (1) year of initiating operations at the facility. The facility's GHP must be amended and reissued to the facility within one (1) year of any changes to the facility's *"GHP Applicability Certification"*.

When warranted, the BMP Fact Sheets provided in Section 3.0 may need to be updated or revised. At the same time, additional BMP Facts Sheets may be added. The need for such updates or modifications will be at the discretion of the County's GHP Program Administrator.

2.3 Inspections

The County's MS4 permit requires each facility covered by a GHP to have the following:

1. Written procedures for annually assessing County properties to prevent the discharge of pollutants, spills, and leaks into the County's storm sewer system; and

2. Written procedure for performing stormwater conveyance system inspections and for removing debris that may cause clogging, backups, and flooding.

To meet these requirements, each facility that is covered by a GHP will be required to complete routine site inspections and stormwater conveyance system inspections as detailed below. Facility management will be responsible for ensuring the necessary inspections are completed within the required timeframes, that corrective actions (if needed) are performed, and that records of inspections and completed corrective actions are maintained for at least five (5) years.

2.3.1 GHP Site Inspections

The GHP Site Inspection will be performed to ensure that each GHP-covered facility is being properly maintained and that there are no visible signs of pollutants entering the stormwater system. GHP facilities shall utilize the *"GHP Site Inspection Checklist"*, provided in ***Appendix A*** to complete the required inspection. At a minimum, each facility is to be inspected every five (5) years.

2.3.2 Conveyance System Inspections

Stormwater conveyance systems are generally comprised of curbs and gutters, catch basins, inlet structures, swales, channels, piping, culverts, detention ponds, outfalls, or other structures that are used to collect, contain, and convey stormwater runoff.

The unimpeded movement of stormwater through conveyance systems is critical in avoiding backups and flooding, which can impede facility operations and damage property. Routine inspections and preventative care of stormwater conveyance systems can ensure these systems function as intended and prevent the need for costly and time-consuming repairs and retrofits.

Each GHP-covered facility is required to conduct routine stormwater conveyance system inspections to ensure the free flow of stormwater within the conveyance systems. GHP-covered facilities shall utilize the *"GHP Stormwater Conveyance System Inspection Checklist"*, provided in ***Appendix B*** to complete the required inspections. At a minimum, facility conveyance system inspections are to be conducted every five (5) years.

2.4 Training

As part of the GHP requirements within the County's Phase I NPDES permit, annual training must be provided to all appropriate staff and contractors. Such training shall be provided to any individuals responsible for implementing the GHP, performing the required inspections, or involved in any of the GHP-covered activities identified in this Plan. The required training shall focus on the duties and responsibilities assigned to site personnel in implementing the GHP and the best management practices (BMPs) prescribed in this Plan for preventing, reducing, and eliminating the discharge of pollutants during facility activities.

The County's MS4/GHP Program Coordinator will be responsible for developing the required training and disseminating it to GHP-covered facilities. Each GHP-covered facility will be responsible for identifying staff/contractors who must attend annual training, ensuring identified staff complete the required training, and maintaining records that document training dates and attendees. Training records and other documentation shall be maintained in ***Appendix D*** of this Plan.

3.0 BEST MANAGEMENT PRACTICES (BMPs)

This section contains a BMP Fact Sheet for each of the ten (10) GHP-regulated activities. The County's operations are not limited to the BMPs contained within this document; nor is the County required to implement all of the pollution prevention measures identified within each BMP Fact Sheet. The County should select and implement those measures that are applicable and have the greatest potential for reducing stormwater pollution.

The BMP Fact Sheets contained within this document offer recommended protocols for a particular activity. These pollution prevention measures are considered non-structural BMPs with a focus on source control of potential pollutants.

3.1 Applicability of BMP Fact Sheets

The *"GHP Applicability Certification"* completed for this facility has identified the activities conducted at this facility that require coverage under this Plan. Each of the BMP Fact Sheets shall be marked as to whether they are applicable or not applicable to this facility. The Applicable/Not Applicable indicator on each BMP Fact Sheet can be revised in response to changes in operations at the facility.

3.2 BMP Fact Sheets

BMP Fact Sheets can be found on the following pages. For the sake of consistency, the general outline of a BMP Fact Sheet will be as follows:

- Identification of GHP-covered activity.
- Applicability of the BMP Fact Sheet to the facility.
- A general description of the concern the activity poses to stormwater.
- Recommended pollution prevention measures for reducing/eliminating stormwater pollution.
- Additional sources of information, if applicable.

WASTE MANAGEMENT

Not Applicable ☒ Applicable ☐

CONCERN

Improperly managed waste can allow trash and debris to be washed into storm drains which poses a concern to water quality, marine life, and public health. It also has the potential to create obstructions in the drainage system, which can lead to backups and flooding. Additionally, improper storage and handling of waste materials can allow pollutants including oils and greases, toxic and chemical compounds (including nutrients), bacteria, metals, and other potentially hazardous wastes to enter waterways.

POLLUTION PREVENTION MEASURES

General *(applicable to all waste management activities)*

1) Provide suitable containers, preferably with working covers, to collect waste materials.
2) Ensure that appropriate waste containers are available in areas where waste is generated.
3) Provide a cover over waste storage areas, if feasible.
4) Avoid positioning waste receptacles near storm drains, water bodies, or areas of concentrated runoff.
5) Ensure that lids to waste containers *(if present)* are kept closed to prevent the intrusion of precipitation and prevent trash from blowing out of the receptacle.
6) For waste receptacles, which do not have lids and could leak, containers should be inspected regularly and controls (e.g., containment, spill response, etc.) shall be enacted whenever leaks or dry-weather discharges are observed.
7) Routinely inspect waste containers, roll-offs, compactors, and other waste receptacles for the presence of excessive waste accumulation and overflowing containers.
8) Ensure that wastes accumulating on the ground are placed in a suitable waste container.
9) Ensure that wastes are removed from the facility regularly by a licensed and contracted vendor.
10) Repair or replace damaged waste container lids.

Trash Compactors

1) Routinely inspect trash compactors for malfunctioning equipment or leaking hydraulic oil and provide the appropriate spill response if leaking equipment is encountered.
2) Regularly inspect compactors for leaking fluids and implement appropriate controls such as spill response/cleanup, collection or diversion of released fluids, providing secondary containment, etc. whenever leaks or dry-weather discharges are observed.

Scrap Metal Collection Containers

1) Avoid placing oily or grease-covered items in uncovered scrap metal recycling collection containers. If needed, wrap oily/greasy items in plastic garbage bags before placing them in the collection container.

Hazardous/Universal Wastes

1) Ensure that hazardous waste and universal wastes (e.g., batteries, bulbs, etc.) are collected and stored indoors or within covered collection containers.
2) Verify that hazardous/universal waste collection containers are in good condition, not leaking, and compatible with the wastes being stored.

Street Sweeping / Vactor Truck Material Storage

1) Do not site storage areas near storm drains, open water bodies, or areas of concentrated runoff.
2) Install sediment control devices (e.g. silt fence, silt socks, hay bales, etc.) around the staging area. Inspect these controls regularly and replace them as needed.
3) Cover the materials staging area, if feasible.
4) Provide oil-absorbent booms if necessary to control oily discharge. Inspect and replace booms regularly.
5) The staging area should be checked periodically for evidence of sediment migrating outside of the staging area. Material that has migrated out of the staging area should be promptly swept and returned to the staging area or disposed of.

Waste Cooking Oil/Grease

1) Maintain storage containers indoors or within a covered location, if feasible.
2) Storage containers shall be secured to prevent infiltration of precipitation and accidental/intentional spills or releases.
3) Carefully transfer waste oil/grease to the appropriate collection container to avoid spills.
4) Maintain suitable spill response equipment near collection containers. Immediately clean up any spilled oil/grease. Keep the exterior of the collection container clean and free of spilled oil/grease.
5) Provide secondary containment for collection containers, if feasible.

VEHICLE AND EQUIPMENT STORAGE

Not Applicable ☒ Applicable ☐

CONCERN

Vehicles and equipment may be stored onsite to support various County operations (e.g., construction, maintenance, snow removal, roadside assistance, mass transit, mowing, etc.). Examples of County owned and operated vehicles and equipment stored onsite at any given time include but are not limited to, the following: cars, trucks, buses, emergency response vehicles, garbage trucks, heavy equipment (backhoes, frontend loaders, etc.), forklifts, towable generators, portable light stands, and roadside equipment. Vehicle and equipment storage is considered a pollutant source due to the potential for incidental releases of petroleum products, lubricants, and various automotive fluids.

POLLUTION PREVENTION MEASURES

1) When possible/practical, store vehicles and equipment inside or under cover to prevent exposure to precipitation.
2) If vehicles or equipment must be stored outside, store vehicles/equipment in designated areas away from areas of concentrated runoff, storm drains, and other stormwater conveyances.
3) Vehicles and equipment shall be staged on impervious (asphalt or concrete) surfaces;
4) Keep truck beds clean and ensure potential stormwater pollutants are stored in closed containers, covered, or otherwise protected from stormwater exposure.
5) Conduct routine visual inspections of vehicles and equipment for the presence of leaks and respond accordingly.
6) Leaking vehicles/equipment should be moved inside or under cover. At a minimum, drip pans or absorbent pads shall be used to contain the leak until the vehicle/equipment can be relocated and the leak addressed.
7) Drain all fluids from wrecked or heavily damaged vehicles and equipment before storage.
8) Have an adequate supply of appropriate spill response equipment readily available and clean up all spills and leaks immediately utilizing dry cleaning techniques (e.g. absorbents and brooms).
9) Train staff in spill response so that incidents are addressed in a timely fashion.
10) Do not wash down areas where leaks have collected on ground surfaces; use dry cleaning methods such as granular absorbents and brooms.

VEHICLE AND EQUIPMENT REFUELING

Not Applicable ☒ Applicable ☐

CONCERN

Refueling activities associated with County vehicles and equipment can result in a discharge of fuel (gasoline and diesel fuel), which has the potential to enter the storm drain system and/or a nearby waterway. Such releases can introduce hydrocarbons, metals, and other toxic chemicals to stormwater runoff.

POLLUTION PREVENTION MEASURES

General Procedures *(applicable to all refueling activities)*

1) Routinely *(at least daily)* inspect the fuel dispensing area for any spills or leaks.
2) Routinely inspect fuel dispensing equipment looking for leaking or damaged equipment. Damaged or malfunctioning equipment shall be taken out of service until it has been repaired.
3) Fuels will only be dispensed into authorized vehicles, equipment, and approved containers.
4) Vehicle operators must remain outside of their vehicles and in attendance of fuel dispensers at all times while dispensing fuel.
5) Third-party contractors must be trained in proper refueling procedures and pollution prevention.
6) Do not utilize a foreign object to keep the dispenser nozzle in the open position. If present, a “hold-open” latch on the nozzle may be used.
7) Do not “top off” a vehicle’s fuel tank once the dispenser nozzle’s automatic shut-off has been activated. Topping off tanks may result in spills. Post signs in fueling areas warning vehicle operators against "topping off" of vehicle fuel tanks.
8) After refueling has stopped, allow several seconds to pass before removing the nozzle and returning it to the dispenser. This will prevent incidental dripping from the nozzle.
9) Employees refueling vehicles shall note the location of the “Emergency Fuel Shut Off” switch, to be used to stop the flow of fuel to the dispensers in the event of a release or emergency.
10) Have an adequate supply of appropriate spill response equipment readily available and clean up all spills immediately utilizing dry cleaning techniques (e.g. absorbents and brooms).
11) Immediately clean up and dispose of used absorbent material.
12) Do not wash down fueling areas; use dry cleaning methods such as granular absorbents and brooms.
13) Conduct refueling activities over impervious (e.g. concrete) surfaces. Place drip pans or absorbent pads under the nozzle if fueling occurs over a permeable surface such as grass or soil.
14) Install oil control devices in storm drains that may receive contaminated runoff from fueling areas.
15) Cover fueling areas with a canopy or roof to prevent direct contact with rainfall. Direct run-on away from fueling areas and collect fueling area run-off in a dead-end sump or oil-water separator.

Mobile Equipment Refueling

1) Refuel equipment on an impervious surface, downgradient of, and at the farthest practical distance from any storm drain, stormwater conveyance, stormwater management feature, or waterway.
2) Utilize secondary containment when refueling equipment (when practical).
3) Ensure mobile refuelers are parked in designated locations and away from areas of concentrated run-off, storm drains, and other stormwater conveyances.
4) Ensure that procedures are in place and that staff is properly trained in spill response/cleanup so that leaks and spills are addressed appropriately and promptly.

VEHICLE MAINTENANCE

GH-04

Not Applicable ☒ Applicable ☐

CONCERN

Vehicle and equipment maintenance can impact the water quality of nearby waterways by exposing stormwater to various pollutants including petroleum hydrocarbons, solvents, antifreeze/coolants, used oil, lubricating oil, grease, brake fluid, metals, and various chemicals. Additionally, vehicles that are wrecked or awaiting repair can be a source of pollution if leaking fluids are not properly controlled.

POLLUTION PREVENTION MEASURES

1) Conduct vehicle and equipment maintenance activities indoors.
2) Make sure incoming vehicles and equipment are inspected for leaking fluids and oil.
3) Move leaking vehicles or equipment indoors or under cover as soon as possible. At a minimum, a drip pan or absorbent pads shall be utilized to contain the leak until the vehicle/equipment can be relocated and the leak addressed.
4) Avoid performing maintenance on vehicles in close proximity to exterior doorways, which may allow released fluids to migrate outdoors.
5) Have an adequate supply of appropriate spill response equipment readily available and clean up all spills and leaks immediately utilizing dry cleaning techniques (e.g. absorbents and brooms).
6) Keep maintenance areas neat and well organized. Remove dirt, debris, and used absorbent regularly.
7) Inspect maintenance areas as well as maintenance equipment on a routine basis.
8) Store vehicles, parts, and generated wastes indoors or off the ground and under cover whenever possible. When practical, provide secondary containment.
9) Promptly transfer used fluids to the proper waste container; do not leave full drip pans or other open containers around the shop. Empty and clean drip pans and containers regularly.
10) Waste liquids shall not be poured into floor drains, sinks, outdoor storm drain inlets, or other storm drains or sewer connections. Liquid wastes are to be collected in properly labeled containers and disposed of by a licensed waste hauler or other appropriate method.
11) Store leaking batteries in a sealed container and provide secondary containment, if feasible.
12) Clean all parts indoors utilizing a self-contained parts washer.
13) Do not hose down indoor service areas to storm drains or areas where it can seep into groundwater.
14) Maintain floor drains in good working order and inspect for proper function on a routine basis. Consider plugging floor drains that discharge to the storm sewer.
15) Ensure oil/water separators (if present) are maintained in proper working order and are checked on a routine basis for the presence of oil.
16) If maintenance work must be performed outdoors, adhere to the following requirements:
    - Conduct maintenance activities over an impervious surface, away from stormwater inlets.
    - Cover outdoor maintenance areas and direct stormwater run-on away from the area.
    - Use drip pans or drop cloths underneath the equipment to catch leaks and drips.
    - Have an adequate supply of appropriate spill response equipment readily available.
    - Clean all spills immediately using dry cleaning techniques (e.g. absorbents and brooms).
    - Avoid performing maintenance activities during precipitation events.
    - Limit temporary outdoor maintenance activities to a single shift/day if additional time is needed to cover the work area at the end of each day/shift.

BMP Fact Sheet

VEHICLE AND EQUIPMENT WASHING

GH-05

Not Applicable ☒ Applicable ☐

CONCERN

Vehicle and equipment washing can generate washwater that contains oil, grease, organic compounds, surfactants, phosphates, metals, and suspended solids. If vehicles/equipment are washed outdoors on impervious surfaces, dirty washwater can contaminate stormwater that ends up in waterways. Washing equipment over pervious surfaces can allow washwater to seep into the ground contaminating groundwater.

POLLUTION PREVENTION MEASURES

1) Vehicle and equipment washing should only be conducted in designated indoor wash bays that capture and recycle washwater to the extent practical.
2) Wastewater from the washing facility should be discharged to the sanitary sewer system under the authorization of a wastewater discharge permit issued by the local municipal authority.
3) The floor of indoor vehicle wash bays should be completely bermed or sloped to collect wash water and prevent migration outdoors.
4) No other activities (e.g., fluid changes, repairs, material storage) shall be performed in wash areas.
5) Keep the wash bay neat and well organized. Sweep or pick up all trash and debris daily or as needed.
6) Solid materials accumulated on vehicles or in vehicle beds (e.g. salt, soil, grass, etc.) shall be knocked off or otherwise removed from the vehicle (while inside the wash bay) prior to washing. Solid materials shall be collected and disposed of properly.
7) For vehicles too large to completely fit in the wash bays, only the portion of the vehicle physically located in the confines of the wash bay shall be cleaned. The vehicle shall then be rotated to allow for the remaining portion of the vehicle to be washed.
8) Use nozzles that automatically turn off water when not in use and consider high-pressure, low-volume sprays.
9) Avoid detergents as much as possible. If detergents are necessary, use a biodegradable, phosphate-free detergent.
10) If discharging to an oil-water separator, use a non-emulsifying detergent.
11) Inspect floor drain systems, holding tanks, and conveyances associated with designated wash areas regularly. Maintain oil/water separators and/or process flowthrough separators on a routine basis.
12) Use commercial car washes when vehicle or equipment washing cannot be performed onsite without causing impacts to stormwater.
13) If washing must occur onsite and outdoors, use a designated impervious area that is marked with posted signs indicating proper washing procedures. This area must be bermed to contain the wash water and graded to direct the wash water to the sanitary sewer, an oil-water separator, a holding tank, a dead-end sump, or other containment area. Captured water shall be disposed of properly.
14) Avoid steam cleaning and engine/undercarriage washing which can produce high pollutant concentrations. If steam cleaning or engine washing is necessary, perform such cleanings within isolated indoor areas, and ensure wash water is treated and discharged to the sanitary sewer (if permitted to do so) or captured for off-site disposal.
15) Train staff in proper washing techniques and how to confine washing to designated wash areas.
16) Consider alternatives to washing such as using air to blow grass and debris from small equipment, wet-wiping equipment with rags, etc.

BMP Fact Sheet

MATERIAL STORAGE

GH-06

Not Applicable ☒ Applicable ☐

CONCERN

The storage of petroleum products, chemicals, paints, cleaners, pesticides, fertilizers, bags of erodible materials like sand, cement, and soil, and other potential pollutants can negatively impact surface waters through the accidental releases or leaching of materials into stormwater. Unprotected outdoor storage areas can generate a wide range of stormwater pollutants, such as sediment, nutrients, toxic materials, and petroleum products.

POLLUTION PREVENTION MEASURES

1) Whenever possible, store containers (e.g. drums, bins, bags, cans, and totes) indoors or under cover to limit exposure to stormwater.
2) Designate specific areas for material delivery and storage that are away from heavy traffic areas, storm drains, stormwater conveyances, and areas of concentrated run-off.
3) Designated outdoor storage areas should be paved or consist of an impervious surface.
4) Provide secondary containment for materials whenever possible or required per regulation.
5) Store materials on pallets to prevent stormwater run-on from coming into contact with materials, prevent container corrosion, and allow for better leak detection. Pallets must be in good condition and promptly replaced once damaged or deteriorated.
6) Stack containers according to the manufacturer's recommendations to avoid damage.
7) Immediately replace damaged, corroded, or leaking containers.
8) Ensure all storage containers are clearly labeled with their contents.
9) Keep containers tightly sealed after use.
10) Maintain an accurate inventory of hazardous substances and limit on-site storage to that which is necessary to support facility operations.
11) Keep storage areas neat and well organized; remove debris and unneeded material promptly.
12) If empty drums are stored outdoors, ensure that all openings are equipped with caps to prevent water intrusion and that the drum/storage area is labeled "Empty Drums".
13) Have an adequate supply of appropriate spill response equipment readily available and clean up all spills and releases immediately utilizing dry cleaning techniques (e.g. sweeping/absorbents).
14) Clean up all migrating dry materials upon discovery and address the source of the release.
15) Provide perimeter controls (e.g., berms, rock check dams, etc.) for erodible stockpiles of materials such as mulch, sand, and gravel to prevent migration into the stormwater system.
16) Routinely inspect material storage areas for leaks, material migration, and damaged or corroded containers. Ensure that secondary containment and other perimeter controls are in satisfactory condition.
17) Additional visual inspections of outdoor storage areas should be conducted after significant rainfall events (i.e., greater than 0.5 inches).

BMP Fact Sheet

ABOVEGROUND STORAGE TANKS

GH-07

Not Applicable ☐ Applicable ☒

CONCERN

Aboveground storage tanks (ASTs) may be used to store fuels, automotive fluids, chemicals, or deicing fluids. Leaks from tanks, piping, or other equipment and releases during fluid transfers can all impact stormwater quality. It is critical to maintain ASTs in good working condition to prevent spills and/or releases from occurring. Improperly managed storage tanks can cause significant environmental impacts.

POLLUTION PREVENTION MEASURES

General *(applicable to all storage tanks)*

1) ASTs should be installed and maintained in accordance with COMAR 26.10 and applicable fire codes.
2) ASTs should be provided with secondary containment, whenever feasible or required by regulation.
3) Secondary containment areas shall be maintained clean and dry; drain valves must be kept closed; accumulated liquid shall only be discharged if there are no visible signs of impacts, and in accordance with applicable regulations.
4) Inspect ASTs monthly to identify any leaking or malfunctioning equipment and ensure tanks are functioning as designed.
5) ASTs shall be equipped with a form of liquid-level detection (i.e. sight gauge, electronic monitoring).
6) ASTs shall be equipped with overfill prevention (i.e. overfill alarm and/or overfill prevention valve).
7) Tanks and piping should be protected from vehicle impact via barriers, bollards, guard rails, etc.
8) Install ASTs on solid foundations over impervious surfaces, and away from areas of concentrated run-off, storm drains, and other stormwater conveyances.
9) Properly label all storage tanks (e.g., contents, capacity, etc.).
10) Keep remote fills and fill port spill buckets clean and dry.
11) Keep fill ports, gates, and tank areas secured when not in use to prevent fuel theft and tampering.
12) Have an adequate supply of appropriate spill response equipment readily available and clean up all spills and leaks immediately utilizing dry cleaning techniques (e.g. absorbents and brooms).
13) Facilities that maintain 1,320 gallons or more of aboveground oil products shall prepare and implement a Spill Prevention, Control, and Countermeasure (SPCC) Plan, per 40 CFR 112.
14) Facilities that maintain 1,000 gallons or more of used oil or 10,000 gallons or more of virgin oil in ASTs shall obtain an Individual Oil Operations Permit from the MDE, per COMAR 26.10.01.09.
15) Owners/Operators of facilities that maintain more than 2,500 gallons of oil in ASTs are required to register each AST with MDE, per COMAR 26.10.01.10.

Bulk Fluid Transfers (Deliveries)

1) All bulk fluid transfer operations shall be performed under the direct supervision of knowledgeable County personnel. At no time shall the delivery vehicle or delivery vehicle operator be unsupervised.
2) The product level within the tank must be measured and available capacity verified before delivery.
3) Deliveries shall be made via fill ports equipped with catch basins to capture drips and spills.
4) Ensure an adequate supply of appropriate spill response equipment is readily available.
5) Post signs in delivery area displaying proper delivery procedures and emergency contact information.

ABOVEGROUND STORAGE TANKS

Used Oil Tanks

1) County personnel must verify the level of product in used oil tanks prior to filling.
2) Used oil tanks should only be filled via designated fill ports. Pumping used oil into the tank via a closed piping system is preferred to manually pouring used oil into the tank.

Brine Tanks

1) If multiple tanks are located onsite, the tanks should be plumbed to ensure that the complete failure of one tank will not drain all the tanks in the system (tanks must be isolated).
2) Minimize seeping and leaking at fittings by properly supporting piping and fittings, using flexible connectors or hoses to reduce stress, and installing corrosion-resistant fittings.
3) Consider placing hoses in non-permeable trenches or using drip-less nozzles to reduce repeated small spills.

RESIDENT DROP-OFF CENTER

Not Applicable ☒ Applicable ☐

CONCERN

Resident Drop-Off Centers are publicly accessible facilities where residents can drop off used automotive fluids (i.e. oil or antifreeze), municipal waste, recyclable, and/or organic waste, typically free of charge. Improper transfer or management of the waste materials can allow a number of pollutants including oils and greases, toxic and chemical compounds, nutrients, metals, and other wastes to enter waterways.

POLLUTION PREVENTION MEASURES

General *(applicable to all materials collected)*

1) Clearly identify waste materials accepted by the facility, and clearly mark designated collection areas.
2) Waste material should be inspected by a County representative, prior to disposal.
3) Avoid positioning waste receptacles near storm drains, water bodies, or areas of concentrated runoff.
4) When practical, receiving areas should be covered.
5) Do not allow containers to overflow or waste materials to accumulate on the ground.

Automotive Fluid Collection

1) Used oil, antifreeze, and automotive fluid receiving areas should be on impervious surfaces, covered, and provided with secondary containment, which shall be maintained clean and dry.
2) Provide lidded waste receptacles in the receiving area for the public to dispose of empty containers. Waste receptacles shall be emptied routinely and waste disposed of properly.
3) Collection areas shall be inspected daily and all trash and spilled liquids appropriately cleaned up.
4) The available capacity of waste liquid collection containers shall be routinely verified and waste removals scheduled, as needed.
5) Install appropriate controls to prohibit the overfilling of waste fluid collection containers.
6) Place appropriate spill response equipment in close proximity to drop-off areas.
7) If aboveground tanks are used to collect waste fluids, refer to BMP Fact Sheet GHP-07 (Aboveground Storage Tanks) for additional recommendations.

Organic Debris Collection

1) Routinely transfer collected organic debris/waste to a composting or disposal facility.
2) Do not permit composting of organic waste except at properly designed and permitted facilities.
3) Enact controls to prevent leaves and other windblown debris from entering stormwater inlets.

Municipal Waste / Recyclables Collection

1) Refer to BMP Fact Sheet GHP-01 (Waste Management) for additional recommendations.

BMP Fact Sheet

STOCKPILES

GH-09

Not Applicable ☒ Applicable ☐

CONCERN

The County may stockpile various erodible materials, the type of material can vary depending on the needs of the County. Stockpiled material may include soil, sand, millings, slag, cinders, sawdust, landscaping bark, compost, etc. Exposed stockpiles can easily erode due to wind or precipitation and contribute suspended solids to stormwater runoff.

POLLUTION PREVENTION MEASURES

1) Maintain stockpiles of erodible materials within roofed storage buildings or covered storage bins, if feasible. If not, stockpile material on an impervious surface and cover the stockpile.
2) Temporary stockpiles should be placed on an impermeable membrane (tarp) for quick clean-up.
3) Locate stockpiles away from drain inlets, catch basins, swales, areas of concentrated stormwater flow, water bodies, and environmentally sensitive areas.
4) Divert stormwater flows away from/around the stockpiles using a diversion device (e.g., temporary swale, berm, sandbags, or diversion fence).
5) Cover temporary stockpiles of erodible materials with a tarp that has been adequately secured. The covers must be in place at all times when the stockpile is not in active use.
6) When accessing a portion of the stockpile, only remove a section of the cover to minimize exposure to the elements.
7) Use barriers to isolate stockpiled materials from high-traffic areas to prevent tracking of materials.
8) Sweep (do not wash or hose down) in front of material stockpile storage areas at regular intervals, following loading and unloading activities, and during times of heavy use.
9) If material is observed migrating from the stockpile, clean up all migrated material upon discovery and provide additional controls to reduce migration from the stockpile. If such measures are ineffective implement controls to capture pollutants before they migrate off-site (e.g. silt fencing, inlet filters, filter socks, at-grade inlet protection, etc.).
10) Minimize material stockpile inventory based on historical inventory/usage records and public safety operational needs.
11) Cold mix asphalt shall be stored on and covered with plastic sheeting or comparable material.
12) Routinely inspect outdoor material stockpiles to verify existing controls are functioning properly and for signs of erosion or material transport.

BMP Fact Sheet

DEICING MATERIALS

GH-10

Not Applicable ☒ Applicable ☐

CONCERN

When salt and other de-icing materials are stored outside and uncovered, they have a much higher risk of being eroded and transported offsite by stormwater. Improper de-icing material and sand storage may result in stormwater runoff containing elevated concentrations of sodium chloride and dissolved solids. Sodium chloride (e.g., road salt) is an effective deicer but can be highly corrosive to stormwater facilities. Smaller waterways are at a higher risk to increases in salinity, which can threaten aquatic species. Additionally, runoff containing sodium chloride has the potential to reach drinking water sources where small traces can adversely impact public health.

POLLUTION PREVENTION MEASURES

1) Bagged de-icing chemicals must be stored indoors. If stored outdoors bags must be kept on pallets (off the ground) and covered at all times. Bags must be intact without holes or openings.
2) Bulk de-icing materials shall be stored under cover and on an impervious surface.
3) Bulk salt storage areas/buildings shall not be overfilled so that salt spills out beyond the entrance of the storage area/building.
4) Bulk salt storage areas/buildings shall be maintained in a structurally sound condition and in a way that prevents the release of salt and the infiltration of stormwater. Deicing materials should not touch the sides of metal storage containers.
5) Barriers such as berms, gates, knee walls, tarps, and/or straw bales shall be placed at the entrances of bulk salt storage areas/buildings to prohibit the migration of salt and prevent contact with precipitation/stormwater runoff.
6) Routinely inspect storage areas for migrating materials or deterioration of containment structures. Sweep up all migrating materials upon discovery and repair the source of the migrating pollutant.
7) Loading areas should be constructed of impervious material and covered or enclosed, to the extent practical, to reduce potential contact with stormwater.
8) Minimize the distance de-icing materials are transported during loading/unloading activities.
9) Prevent and/or minimize the spillage of salt and de-icing materials during loading/unloading activities, immediately clean spilled or tracked materials.
10) Sweeping of storage and loading/unloading areas shall be conducted immediately following loading/unloading activities.
11) Do not store de-icing materials (bulk or bagged) over or immediately adjacent to drains or waterways.
12) Control site drainage by diverting stormwater run-on away from storage/loading areas using appropriate measures (e.g., curbing, berms, etc.).
13) Slope storage/loading areas to direct salt-contaminated runoff to an appropriate collection area, and in a manner that prevents the runoff from reaching adjacent soil or surface waters.
14) Excess salt shall be removed from salt handling equipment (trucks, spreaders, etc.) following use/prior to storage. All cleaning shall occur on an impervious surface, which is sloped or curbed to contain any washwater and direct it to a collection area for recycling or proper disposal.

Appendix A

GHP Site Inspection Checklist

GOOD HOUSEKEEPING PLAN (GHP)
SITE INSPECTION CHECKLIST

Facility Name: _____ **Inspection Date:** _____

Inspector Name: _____ **Inspector Signature:** _____

- The intent of this inspection is to ensure that the site is being properly maintained and that there are no visible signs of pollutants entering the stormwater system.
- **A shaded status box designates an item in a non-compliant status. Please provide an explanation for all non-compliant items and subsequently document all corrective actions performed.**
- Retain the completed checklists for five (5) years.

Item	Status			CORRECTIVE ACTIONS/COMMENTS *Items which cannot be corrected immediately must be reported to the GHP/NPDES Program Manager*
	Yes	No	N/A	
GENERAL HOUSEKEEPING				
1. Are exterior areas of the facility free of accumulated trash, debris, and unneeded materials?				
2. Are stormwater drains and inlets free from debris, sediment, and evidence of spills/releases?				
3. Is the facility free from signs of erosion?				
4. Are paved surfaces free of accumulated sediment?				
5. Is spill response equipment available in maintenance areas, fueling areas, hazardous material storage areas, and/or other required areas?				
6. Are spill kits and absorbent materials clearly labeled and accessible (i.e. items are not piled on top of or in front of spill kits)?				
7. Are spill kits secured from being stolen or misused?				
8. Is there a labeled container present for the disposal of used spill cleanup material?				

GOOD HOUSEKEEPING PLAN (GHP)
SITE INSPECTION CHECKLIST

Item	Status			CORRECTIVE ACTIONS/COMMENTS *Items which cannot be corrected immediately must be reported to the GHP/NPDES Program Manager*
	Yes	No	N/A	
9. Does spill response equipment (i.e. spill kits, absorbent materials) need to be replenished?				
WASTE MANAGEMENT				
10. Are areas around solid waste containers/roll-offs/compactors free of excessive trash accumulation or overflowing containers?				
11. Are areas around solid waste containers/roll-offs/compactors free of visible evidence (i.e. leaks, staining) of ongoing stormwater pollution?				
12. Are scrap metal containers in good order and free from evidence of leaking oil/grease?				
13. For dumpsters, roll-offs, and other waste receptacles, where leaks are observed, have appropriate controls (e.g. containment, spill response, etc.) been enacted?				
14. Are the lids (if present) to solid waste containers closed?				
15. Is street sweeping/vactor waste being managed appropriately (i.e. no evidence of material migration)?				
16. Is waste cooking grease managed appropriately (i.e. no evidence of spilled material or excessive staining)?				
VEHICLE & EQUIPMENT STORAGE				
17. Are stored vehicles/equipment free from leaks?				
18. If leaks are present, are they being managed appropriately (drip pan or other methods in place to capture released liquids)?				
19. Are storage areas free of visible evidence of chronic leaks/spills (i.e. significant staining)?				

GOOD HOUSEKEEPING PLAN (GHP)
SITE INSPECTION CHECKLIST

Item	Status			CORRECTIVE ACTIONS/COMMENTS *Items which cannot be corrected immediately must be reported to the GHP/NPDES Program Manager*
	Yes	No	N/A	
VEHICLE & EQUIPMENT REFUELING				
20. Are the areas around refueling areas free from evidence of spills or leaks?				
21. Are refueling areas free of used absorbent material that has not been swept/cleaned up?				
22. Do fuel dispensers and hoses appear to be in good working order and well-maintained?				
VEHICLE MAINTENANCE				
23. Is there any indication that vehicle maintenance activities are being conducted outdoors?				
24. Is there any indication that vehicle maintenance activities are contributing to stormwater pollution?				
VEHICLE & EQUIPMENT WASHING				
25. If performed on-site, does all vehicle/equipment washing occur indoors?				
26. Is wash water collected and disposed of properly?				
27. Is there any indication that vehicle/equipment wash water is being released to stormwater conveyances or pervious areas?				
MATERIAL STORAGE				
28. Are all outdoor storage areas free from visible signs of leaks or spilled material?				
29. Are material storage containers in good condition?				

GOOD HOUSEKEEPING PLAN (GHP)
SITE INSPECTION CHECKLIST

Item	Status			CORRECTIVE ACTIONS/COMMENTS *Items which cannot be corrected immediately must be reported to the GHP/NPDES Program Manager*
	Yes	No	N/A	
30. Are drums, totes, and other containers (that are <u>not</u> empty) stored off the ground and covered, or stored indoors?				
31. Are liquid-containing drums/totes located outdoors provided with secondary containment?				
32. Are containers that are located outdoors equipped with closed lids except when material transfers are occurring?				
33. Are materials, which could impact stormwater, stored away from heavy traffic areas, or protected from vehicle collisions?				
34. Are chemical storage containers properly labeled?				
35. If empty drums are stored outside, are all openings equipped with caps to prevent water intrusion?				
ABOVEGROUND STORAGE TANKS				
36. Are all storage tanks, and surrounding areas free from visible signs of leaks or spilled material?				
37. Do storage tanks appear to be in good working order (e.g. free of obvious signs of damage or malfunctioning equipment)?				
38. Are remote fills associated with tanks free of liquid and debris?				
RESIDENT DROP-OFF CENTERS				
39. Are waste collection areas clearly identified?				
40. Are used oil/antifreeze collection tanks, containment structures, and surrounding areas free from visible signs of leaks or spilled material?				

GOOD HOUSEKEEPING PLAN (GHP)
SITE INSPECTION CHECKLIST

Item	Status			CORRECTIVE ACTIONS/COMMENTS *Items which cannot be corrected immediately must be reported to the GHP/NPDES Program Manager*
	Yes	No	N/A	
41. Do used oil/antifreeze collection tanks appear to be in good working order (e.g. free of obvious signs of damage or malfunctioning equipment)?				
42. Are empty used oil/antifreeze containers being collected and disposed of in the trash?				
43. Are areas around waste/recyclables containers free of excessive trash accumulation or overflowing containers?				
44. Are areas around waste/recyclables containers free of visible evidence (i.e. leaks, staining) of ongoing stormwater pollution?				
45. Are organic debris collection areas free of visible evidence of ongoing stormwater pollution (e.g. leaves and debris in stormwater conveyances)?				
STOCKPILES				
46. Are material piles, including salt, soil, sand, and millings isolated (i.e. covered, bermed, etc.) to prevent stormwater run-on and run-off?				
47. Are areas surrounding material piles (e.g. salt, soil, sand, millings, etc.) free of tracked or migrated material?				
DEICING MATERIALS				
48. Are all deicing materials stored indoors or undercover?				
49. Are salt storage structures in good condition (e.g. no evidence of material escaping or stormwater infiltration)?				
50. Is the salt loading area clean?				

GOOD HOUSEKEEPING PLAN (GHP)
SITE INSPECTION CHECKLIST

Item	Status			CORRECTIVE ACTIONS/COMMENTS *Items which cannot be corrected immediately must be reported to the GHP/NPDES Program Manager*
	Yes	No	N/A	
51. If deicing materials are tarped, is the tarp secure and covering the entire pile?				
52. Are bags of salt stored indoors, or off the ground and covered?				

ADDITIONAL COMMENTS:

Appendix B

GHP Stormwater Conveyance System Inspection Checklist

GOOD HOUSEKEEPING PLAN (GHP)
STORMWATER CONVEYANCE SYSTEM INSPECTION CHECKLIST

Facility Name: _____ **Inspection Date:** _____

Inspector Name: _____ **Inspector Signature:** _____

- The intent of this inspection is to ensure the free flow of stormwater within on-site conveyance systems and prevent damage/flooding.
- **If maintenance is needed, please provide an explanation, and document all corrective actions performed.**
- **Inspections shall include visually accessible infrastructure only; at no time shall inspection personnel enter a confined space.**
- Retain the completed checklists for five (5) years.

Item	Item Checked (Y/N/NA)	Maintenance Needed (Y/N)	CORRECTIVE ACTIONS/COMMENTS *Items which cannot be corrected immediately must be reported to the GHP/NPDES Program Manager*
CATCH BASINS / INLETS			
1. Look for debris and sediment blocking catch basin grates. If found, remove.			
2. Look for damage or cracks to the frame, grate, basin walls or bottom. If found, schedule repairs or replacement.			
3. Look for sediment and debris in the catch basin sump. If sediment fills 60% of the sump or comes within 6” of a pipe it should be scheduled for cleaning.			
4. If any type of filtering device is present, verify that the filter is not clogged, torn, or damaged; clean if clogged, replace if damaged.			
PIPES / CULVERTS			
5. Look for evidence of clogged piping (e.g. visual obstructions, standing water within manholes/inlets structures, etc.). If found, remove or schedule cleaning.			
6. Verify vegetation growth, if present, does not impede water flow. If it does, mow, cut back, or remove.			

GOOD HOUSEKEEPING PLAN (GHP)

STORMWATER CONVEYANCE SYSTEM INSPECTION CHECKLIST

Item	Item Checked (Y/N/NA)	Maintenance Needed (Y/N)	CORRECTIVE ACTIONS/COMMENTS *Items which cannot be corrected immediately must be reported to the GHP/NPDES Program Manager*
7. Inspect for damaged piping, inlets, outlets, headwalls, wingwalls, or excessive erosion. If found, make or schedule repairs.			
DITCHES / TRAPEZOIDAL SWALES			
8. Check for erosion, slumping, or undercutting. If found, make or schedule repairs.			
9. Look for trash and sediment accumulation. Remove all trash and remove sediment if it will impede water flow or clog downstream structures.			
10. Verify vegetation growth does not impede water flow. If it does, mow, cut back, or remove. Remove any trees or shrubs growing within the ditch.			
11. Check the integrity of check dams, filter socks, or other flow dissipation/filtering devices within the ditch or swale. Perform or schedule service if they are clogged, damaged, or deteriorated.			
12. Check inlets and outlets for debris accumulation, damage, or erosion. If found, make or schedule repairs.			

ADDITIONAL COMMENTS:

GUIDANCE DOCUMENT
GOOD HOUSEKEEPING PLAN - STORMWATER CONVEYANCE INSPECTIONS

INTRODUCTION

Maintaining catch basins, stormwater inlets, and other stormwater conveyance structures on a regular basis will remove pollutants, prevent backups, and ensure the system functions as intended to avoid flooding.

Each GHP-covered facility is required to conduct routine stormwater conveyance system inspections to ensure the free flow of stormwater within the conveyance system(s). The GHP includes a *"GHP Stormwater Conveyance System Inspection Checklist"*, to be used when completing the required inspections. This document provides additional background and guidance to aid facility personnel in completing the inspections.

CATCH BASINS / INLETS

Catch basins and inlets are all points for stormwater to enter storm drain systems. These structures are typically part of a larger conveyance system with many interconnected components where the impairment of one component can compromise the functionality of the larger system. Inlets and catch basins are subject to functional impairment by a variety of conditions, including:

- Structural damage including from vehicles and plows
- Cracks/joint separation at piping (inlet and outlet) connections
- Leaking due to cracks and joint separation
- Missing or damaged grates and grate frames
- Corrosion
- Blockage caused by debris, sediment, vegetation, or other objects

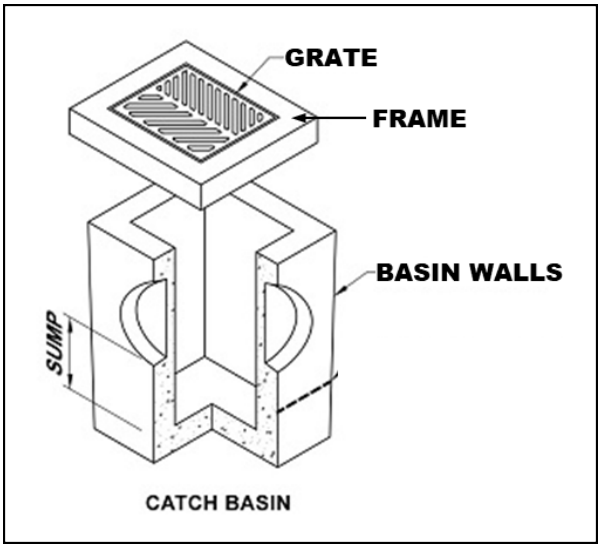

Figure 1 – Catch Basin Diagram

The following photos provide additional information related to the various inspection items, including examples of typical issues that may be encountered. The photo numbers correspond to the inspection checklist item number.

Inspection Item #1 [1]



Debris and sediment blocking inlet/catch basin grate.

Inspection Item #2 [2]



Damaged Grate

Inspection Item #2 [3]



Damaged Frame

Inspection Item #2 [4]



Failing brick walls with a stormwater inlet.

Inspection Item #2 [5]



Failing asphalt surrounding the inlet

[1] Grand Valley State University - https://www.gvsu.edu/groundswell/clogged-storm-drains-71.htm
[2] Georgia Department of Transportation – Stormwater System Inspection and Maintenance Manual, March 2020
[3] https://catchbasinauthority.ca/catch-basin-101/
[4] https://www.fixasphalt.com/catch-basin-repairs
[5] https://ccpia.org/catch-basin-and-manhole-inspections/

Inspection Item #3 [6]



Sediment and debris inside stormwater inlet

Inspection Item #3

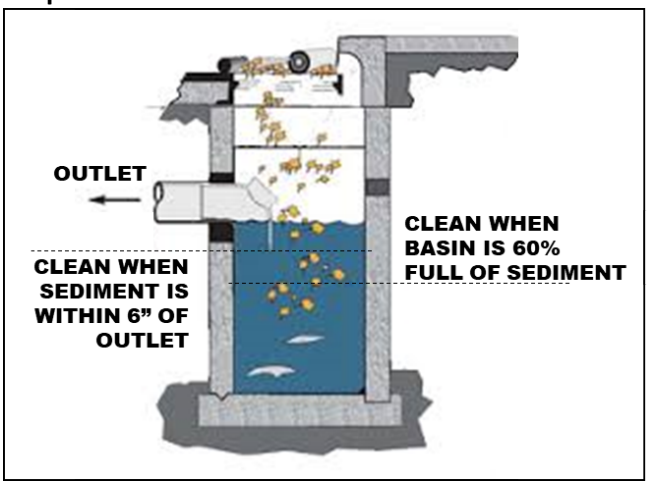

Remove sediment from a catch basin if it fills 60% of the sump or comes within 6" of a pipe.

Inspection Item #4 [7]



Example of inlet filter. Replace when filled or damaged. damaged.

Inspection Item #4 [8]



Example of an inlet filter sock, replace if

PIPES AND CULVERTS

Pipe systems are designed to convey stormwater runoff safely and effectively from inlets to various discharge points and outfalls. A culvert is a structure that channels water under an obstacle such as a roadway or railroad. These structures are subject to functional impairment by a variety of conditions, including:

- Blockage or obstruction due to build up of vegetation, debris, sediment, or other objects
- Cracks and/or joint separation
- Collapsed pipe
- Corrosion
- Root intrusion
- Lack of stabilization

[6] https://www.fixasphalt.com/catch-basin-repairs
[7] https://store.interstateproducts.com/products/Ultra-Drain-Guards/Ultra-Drain-Guard-Adjustable-Frame-Model
[8] https://www.newpig.com/pig-sediment-filter-sock/p/FLT787

Inspection Item #5 [9]



A pipe filled with sediment, inhibiting flow.

Inspection Item #5 [10]



Standing water around an inlet may indicate a blockage.

Inspection Item #6 [11]



Pipe conveyance filled with vegetation.

Inspection Item #7 [12]

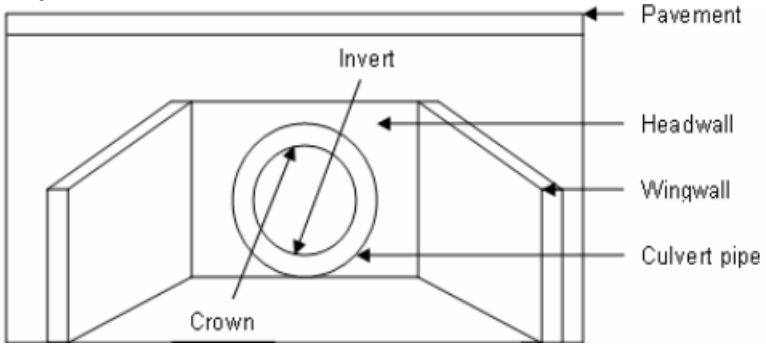

Diagram depicting various components of a culvert.

[9] Georgia Department of Transportation – Stormwater System Inspection and Maintenance Manual, March 2020
[10] https://www3.epa.gov/region9/water/npdes/stormwater-feature.html
[11] Georgia Department of Transportation – Stormwater System Inspection and Maintenance Manual, March 2020
[12] https://www.researchgate.net/figure/Components-of-a-Culvert_fig34_228685906

Inspection Item #7 [13]



A crack is the culvert headwall.

Inspection Item #7 [14]



Evidence of erosion around a culvert.

DITCHES AND SWALES

Ditches and swales serve similar functions. Both are used to convey stormwater. However, there are slight differences. A ditch is a narrow channel typically found along roads and at the edges of parking lots/driveways. A swale is like a ditch, but it is broad and shallow, and usually covered or lined with turfgrass or stone. Issues associated with these structures, which could impede their function include:

- Blockage or obstruction due to vegetation, debris, sediment, or other objects
- Erosion
- Rapidly moving water
- Lack of adequate vegetative cover for grass-lined channels

Inspection Item #8 [15]



Erosion and slumping within a drainage ditch.

Inspection Item #8 [16]



Slumping within a drainage swale.

[13] https://www.sbt-durabi.org/articles/xml/ARN0/
[14] https://lufkindailynews.com/news/local/culverts-crumbling-in-precinct-1/article_a9fed902-4379-5248-ab11-7471e2974298.html
[15] https://graniteseed.com/blog/how-to-stop-a-ditch-from-eroding/
[16] https://www.mnwcd.org/erosion-control

Inspection Item #9 [17]



Litter and debris within a ditch.

Inspection Item #9 [18]



Litter and debris within a swale.

Inspection Item #10 [19]



Cracks and joint separation in concrete channels, removal of vegetation may prevent future damage.

Inspection Item #11 [20]



Rock check dam across a channel.

Inspection Item #11 [21]



Filter sock check dams across a grass swale.

[17] https://craven.ces.ncsu.edu/2023/02/for-those-who-love-to-litter/
[18] https://www.cityoftulsa.org/government/departments/public-works/stormwater-quality/adopt-a-stream/
[19] Georgia Department of Transportation – Stormwater System Inspection and Maintenance Manual, March 2020
[20] EPA Stormwater Best Management Practice, Check Dams, December 2021
[21] EPA Stormwater Best Management Practice, Check Dams, December 2021

Inspection Item #12 [22]



Inlet to a rock-lined swale.

Inspection Item #12 [23]



Sediment accumulation at swale inlet.

END OF DOCUMENT

[22] https://www.stormwater.com/erosion-control/vegetation-management/article/13016118/inlet-protection-during-constructionand-after

[23] https://www.stormwater.com/erosion-control/vegetation-management/article/13016118/inlet-protection-during-constructionand-after

Appendix C

General Spill Response Procedures

SPILL RESPONSE AND NOTIFICATION PROCEDURES

A. Discovery of a Spill

1. Upon discovery of a spill, facility personnel should immediately assess the situation and determine if the spill is considered a "Minor" or "Major" spill. For a spill to be considered "Minor" all the following conditions must be satisfied:

    - ❖ The type of material spilled is known;
    - ❖ The spill is confined to the immediate work area;
    - ❖ The spill has not reached storm drains, sanitary sewer systems, open water, or surrounding soils;
    - ❖ The spill can be safely managed;
    - ❖ The employee can contain and clean up the spill with the PPE that is normally used in the work area;
    - ❖ The spill does not pose a serious threat of fire or an explosion; and
    - ❖ The spill does not pose conditions that are immediately dangerous to life or health.

2. If all the above conditions are met, the spill is considered "Minor". Refer to ***Section B*** of this document for appropriate response actions.

3. If all the above conditions are not met, then the spill is considered "Major". Refer to ***Section C*** of this document for appropriate response actions.

4. If a spill involves flammable liquids, ignitable vapors may be present - precautions must be taken to prevent ignition. Do not turn on or off equipment since sparks may be generated. Additionally, avoid the movement of equipment that could create static electricity. Larger spills of flammable liquids could pose a fire threat and would be considered a "Major" spill. Refer to ***Section C*** for appropriate actions.

B. Response to a "Minor" Spill

1. Identify the source of the spill and the direction in which the spill is heading.

2. Attempt to stop the spill at the source. Where applicable, the source of the spill shall be taken out of service until repairs can be made. If the spill is related to a fuel dispensing system, activate the Emergency Shut-Off (ESO) switch to prevent additional fuel disbursements.

3. If material is released outside a containment area, it is crucial that the material be contained as quickly as possible. Following proper safety procedures, use absorbent materials or diking to contain the spill. Prevent the spill from reaching storm drains, sanitary sewers, or open water. If a spill is flowing toward a drain, install temporary diking around the drain, block off the drain with a drain cover, or place absorbent material around the drain to prevent a discharge.

4. Once the spill has been stopped and contained, estimate the quantity of the spill. Consult applicable Safety Data Sheet (SDS) for material compatibility and environmental precautions. Note and follow recommendations regarding special precautions, spill response equipment, methods, or precautions. All cleanup work shall be conducted in accordance with existing safety protocols and SDS recommendations. Contact the facility Superintendent/Supervisor, or designee, for assistance if needed.

5. Recover or clean up the spilled material as much as possible. Material that cannot be reused must be discarded in accordance with state and federal regulations. Liquids absorbed by porous materials (e.g., wood, gravel, significant quantities of absorbent material, etc.) shall be placed into US DOT-approved 30-gallon or 55-gallon steel drums. Following cleanup, the container shall be secured and appropriately labeled to identify the contents and the date of the spill/cleanup. Containers shall be stored indoors and provided with secondary containment until transported off-site for disposal.

6. For spills that do not involve flammable liquids or other potential hazardous wastes, small quantities of used absorbent materials may be double bagged and disposed of along with municipal trash as long as all liquids have been absorbed (no free liquid may be present).

7. If the spilled material is a flammable liquid, corrosive liquid (pH ≤ 2 or ≥ 12.5), or other potential hazardous waste, all recovered product, impacted material, and used absorbent must be placed into a US DOT-approved containers/drums. Following cleanup, the container(s) shall be secured and appropriately labeled to identify the contents and the date of the spill/cleanup. Containers shall be stored indoors and provided with secondary containment until transported off-site for disposal. The facility Superintendent/ Supervisor, or designee shall be notified that a potential hazardous waste was released and that a waste characterization may be needed to facilitate proper disposal.

8. Surfaces that are contaminated by the spill shall be cleaned utilizing dry absorbent material. Tools and equipment that have been used in the cleanup must be decontaminated immediately after use. Decontamination water (if used) must be minimized, containerized, and disposed of properly.

9. If waste requires disposal, notify the facility Superintendent/Supervisor, or designee who will arrange for the proper characterization and disposal of any waste material. Representative sampling and analysis may be necessary to properly characterize the waste. The waste must be transported and disposed of in compliance with all applicable laws and regulations. Waste manifests, trip tickets, or bills of lading (if required) for waste disposal shall be kept on file.

10. Facility personnel shall restock/replace spill response equipment and absorbent materials used during the clean-up efforts.

11. The facility Superintendent/Supervisor, designee, or other appropriate County personnel shall be notified of the spill in accordance with ***Section D*** of this document.

C. Response to "Major" Spill

A "Major" spill is any discharge that does not meet the definition of a "Minor" spill. Any employee or contractor observing, being involved with, or recognizing a potential or actual spill of oil or other hazardous material, other than a "Minor" spill is responsible for performing the following actions:

1. If there is no danger to human health, attempt to stop and contain the spill at the source. If the spilled material is unknown, if PPE other than that which is typically used in your work area, is necessary to approach the spill area, or if assistance is required to stop the spill, do not attempt to contain the spill. If the spill is related to a fuel dispensing system, activate the Emergency Shut-Off (ESO) switch.

2. Most County employees lack the appropriate training to respond to "Major" spills. If the spill is of an unknown substance, is of a quantity that cannot be safely managed, or poses other risks beyond the training level of the employee, the employee should not attempt to contain or clean up the spill.

3. Evacuate individuals from the area and keep personnel away from the impacted area.

4. Immediately notify the facility Superintendent/Supervisor, or designee of the incident. The notified individual will determine the need for further evacuations and contact emergency response personnel (911), as necessary. *If a situation represents an immediate and grave danger to personnel, the public, structures, or other infrastructure, the individual discovering the incident may call 911 directly without first notifying facility management.*

5. The facility Superintendent/Supervisor or designee will determine if assistance from emergency response contractors is required to clean up the incident and will coordinate such spill response efforts with spill response contractors and other County agencies and first responders.

6. Facility personnel will provide assistance to emergency responders, as appropriate.

D. Reporting a Spill (Internal Notifications)

1. Once a spill is contained and cleanup operations have been initiated, the individual discovering the spill shall notify the appropriate County representatives and provide the following information:

    a) Identify the location, date, and time of the incident;
    b) Identify the type of material spilled or discharged;
    c) Estimate the quantity spilled and the rate of the spill;
    d) Identify the cause of the spill or discharge;
    e) Identify impacted media or infrastructure (soil, storm drains, open water bodies, etc.);
    f) Determine the extent of injuries involved; and
    g) Provide response measures implemented by the facility personnel.

E. Reporting a Spill (Regulatory Notifications)

State of Maryland Reporting Requirements (COMAR 26.10.01.05)

1. Upon discovery of a spill, the Responsible Person shall notify the MDE Emergency Response Division **within two (2) hours** by calling 866-633-4686. The caller shall be prepared to provide the following information:

    a) The time and date of the spill;
    b) The location and cause of the spill;
    c) The mode of transportation or type of facility involved;
    d) Type and quantity of oil spilled;
    e) Details regarding any assistance required;
    f) The name, address, and telephone number of the person making the report; and
    g) Any other pertinent information requested by the Department.

2. MDE will provide further guidance on additional responsibilities.

3. Within **ten (10) working days** of the completed removal and clean-up activities, the Responsible Person shall prepare a report using either County letterhead detailing the incident. The report shall contain the following:

    a) Date, time, and place of the spill;
    b) The amount and type of oil or hazardous substance spilled;
    c) A complete description of circumstances that contributed to the spill;
    d) A complete description of the containment and removal operations performed, including disposal sites to which oil refuse was transported;
    e) Procedures, methods, and precautions instituted to prevent the recurrence of an oil spill from the facility involved;
    f) Any other information considered necessary or required by the MDE for a complete description of the incident; and
    g) A certification that the information provided is true and correct to the knowledge of the person signing the report.

4. The completed report shall be submitted to mdeerd.mema@maryland.gov or faxed to 410-537-3932.

5. A digital copy of the completed report and any accompanying documentation shall be retained

Federal Reporting Requirements - National Response Center (40 CFR 110)

1. If any of the following criteria are met the Responsible Person shall notify the National Response Center (NRC) **within two (2) hours** of the spill discovery by calling 800-424-8802 or 202-426-2675.

    - ❖ The spill has caused a film, sheen, or discoloration of the surface water or shorelines;
    - ❖ The material spilled will violate applicable water quality standards (surface water or groundwater); or
    - ❖ The spill has caused a sludge or emulsion to be deposited beneath the surface of the water or on the shoreline.

2. At a minimum, the following information shall be provided to the NRC:

    a) Name, organization, and telephone number of reporting party;
    b) Name and address of the responsible party;
    c) Date, time, and location of the incident;
    d) Source and cause of the discharge;
    e) Type of material(s) discharged;
    f) Quantity of materials discharged;
    g) Danger or threat posed by discharge;
    h) Number and types of injuries (if any);
    i) Weather conditions at the incident location; and
    j) Other information to help emergency personnel respond to the incident.

3. If unable to report to the NRC, reports can be made to the EPA Regional Office at 800-438-2474 or the U.S. Coast Guard (USCG) at 202-372-1001. The NRC, EPA, or USCG will provide further guidance.

4. A digital record of the NRC notification and any accompanying documentation shall be retained on-site.

Federal Reporting Requirements - EPA Regional Administrator (40 CFR 112.4)

1. If the facility where the spill occurred is regulated under 40 CFR 112 and is required to have a Spill Prevention, Control, and Countermeasures (SPCC) Plan, the Responsible Person shall report the spill to the EPA Region III Administrator when any of the following criteria are met:

   - ❖ More than 1,000 gallons of oil is discharged to navigable waters or adjoining shorelines in a single incident; or
   - ❖ More than 42 gallons of oil is discharged to navigable waters or adjoining shorelines in each of two incidents occurring within any twelve-month period.

2. The report shall be made in writing **within 60 days** of the spill and shall contain:

   a) Name and location of the facility;
   b) Owner/operator name;
   c) Maximum storage/handling capacity of the facility and normal daily throughput;
   d) Corrective actions and countermeasures taken;
   e) Adequate description of the facility including maps, and flow diagrams;
   f) Cause of the discharge to navigable waters, including a failure analysis;
   g) Additional preventative measures taken or planned to minimize discharge reoccurrence; and
   h) Other information required by the EPA Regional III Administrator.

3. The report shall be submitted to the EPA Regional Administrator at the following address:

   EPA Regional Administrator
   US EPA Region 3
   1650 Arch Street (3RA00)
   Philadelphia, PA 19103-2029

4. A copy of the report shall be retained in the facility SPCC Plan.

Appendix D

Training Records

GOOD HOUSEKEEPING PLAN (GHP)
TRAINING ATTENDANCE LOG

FACILITY NAME: _____

DATE	NAME *(PRINT)*	SIGNATURE

By signing I affirm that I have completed the required annual training; and I am aware of and understand my responsibilities under this Plan.

GOOD HOUSEKEEPING PLAN (GHP)

Preston Manor Water Tower
2817 Preston Lane
Abingdon, MD 21009

June 30, 2025

TABLE OF CONTENTS

1.0 BACKGROUND & INTRODUCTION 1
1.1 Objectives 1
1.2 Potential Stormwater Pollutants 1
2.0 RESPONSIBILITIES 3
2.1 GHP Implementation 3
2.2 Plan Review and Modification 3
2.3 Inspections 3
2.3.1 GHP Site Inspections 3
2.3.2 Conveyance System Inspections 4
2.4 Training 4
3.0 BEST MANAGEMENT PRACTICES (BMPs) 5
3.1 Applicability of BMP Fact Sheets 5
3.2 BMP Fact Sheets 5

List of Tables

TABLE 1-1 POTENTIAL STORMWATER POLLUTANTS AND THEIR SOURCES 2

List of BMP Fact Sheets

GH-01 - Waste Management
GH-02 - Vehicle and Equipment Storage
GH-03 - Vehicle/Equipment Refueling
GH-04 - Vehicle Maintenance
GH-05 - Vehicle/Equipment Washing
GH-06 - Material Storage
GH-07 - Aboveground Storage Tanks
GH-08 - Resident Drop-Off Centers
GH-09 - Stockpiles
GH-10 - Deicing Materials

Appendices

Appendix A: GHP Site Inspection Checklist
Appendix B: GHP Stormwater Conveyance Inspection Checklist
Appendix C: General Spill Response Procedures
Appendix D: Training Records

List of Acronyms

AST	-	Aboveground Storage Tank
BMP	-	Best Management Practice
CFR	-	Code of Federal Regulations
GHP	-	Good Housekeeping Plan
MDE	-	Maryland Department of the Environment
MS4	-	Municipal Separate Storm Sewer System
NPDES	-	National Pollutant Discharge Elimination System
SPCC	-	Spill Prevention, Control, and Countermeasure Plan

1.0 BACKGROUND & INTRODUCTION

Polluted stormwater runoff has the potential to enter the County's storm sewer systems (referred to as a municipal separate storm sewer system or MS4), and then discharge, untreated, into local water bodies. To address this potential stormwater pollution, the County is required to obtain a NPDES permit from the Maryland Department of the Environment (MDE). The NPDES Permit requires the County to take actions to prevent stormwater pollution, maintain storm sewer systems, monitor stormwater discharges, and develop and implement comprehensive management programs to minimize the discharge of pollutants from the storm sewer system.

To comply with Part IV.D.4.b of the County's Phase I MS4 Permit, the County must develop, implement, and maintain a Good Housekeeping Plan (GHP) for certain County-owned properties not required to be covered under Maryland's General Permit for Discharges from Stormwater Associated with Industrial Activities *(General Permit 12-SWA / 20-SW).*

To support this effort, a *"Good Housekeeping Plan Applicability Certification"* has been developed to evaluate and document if a specific County-owned facility is subject to the GHP requirements. The *"GHP Applicability Certification"* includes the following ten (10) potential stormwater polluting activities. If any of the covered activities are performed at the facility, then that facility is required to implement a site-specific GHP. The GHP will include each of the potential stormwater polluting activities identified in the *"GHP Applicability Certification"* and corresponding pollution prevention procedures.

- Waste Management
- Vehicle and Equipment Storage
- Vehicle/Equipment Refueling
- Vehicle Maintenance
- Vehicle/Equipment Washing
- Material Storage
- Aboveground Storage Tanks
- Resident Drop-Off Center
- Stockpiles
- Deicing Materials

1.1 Objectives

The GHP was developed to outline suitable practices, procedures, and protocols, or Best Management Practices ("BMPs") for reducing and/or preventing stormwater pollution associated with operations at covered County-owned properties. The intent of the pollution prevention procedures included in the GHP is to limit the release of materials with the potential to impact stormwater, this includes reducing or eliminating (to the extent practical):

- The occurrence of spills and leaks;
- The accidental dumping or release of materials;
- The accumulation of waste, trash, debris, unused parts/equipment, etc.;
- The exposure of hazardous materials to precipitation/run-off;
- Stormwater run-off contamination by improperly stored materials; and/or
- Illicit discharges to the storm drain system.

1.2 Potential Stormwater Pollutants

Table 1-1 on the following page provides a list of common potential pollutants that may result from the GHP-regulated activities identified above. Understanding the sources of these pollutants can help in achieving the goals and objectives of the GHP program.

TABLE 1-1 POTENTIAL STORMWATER POLLUTANTS AND THEIR SOURCES

		Waste Management	Vehicle/Equipment Storage	Vehicle/Equipment Refueling	Vehicle Maintenance	Vehicle/Equipment Washing	Material Storage	Aboveground Storage Tanks	Resident Drop-Off Center	Stockpiles	Deicing Materials
Pollutants	**Sources**	**Associated GHP Activity**									
Sediment	Land disturbance; erosion; paved surfaces; material stockpiles; waste storage; salt/abrasive application	X				X	X		X	X	X
Hydrocarbons *(petroleum compounds)*	Leaking vehicle and equipment; vehicle and equipment cleaning; spills; improper storage; maintenance activities; scrap metal disposal; improper disposal	X	X	X	X	X	X	X	X		
Metals	Vehicle brake and tire wear; vehicle/equipment exhaust; batteries; galvanized metal; paint and wood preservatives; fuels, pesticides, and cleaners; vehicle fueling, maintenance, and washing; industrial waste	X	X	X	X	X	X	X	X		
Toxic Chemicals	Pesticide application; improper chemical storage; leaks and spills from storage containers; leaking vehicles; maintenance activities	X	X		X	X	X	X	X		
Chlorides	De-Icing chemicals										X
Trash/Debris	Improper waste storage and disposal; leaking trash containers; littering; poor housekeeping	X	X				X		X		
Nutrients (nitrogen and Phosphorus)	Fertilizers; malfunctioning septic systems; sewer overflows; animal/pet waste; vehicle washing; decaying grass and leaves; leaking trash containers; atmospheric deposition	X				X	X		X		

2.0 RESPONSIBILITIES

2.1 GHP Implementation

A separate GHP is required for each covered facility. The following individual *(identified by name and/or title)* is accountable for the administration and implementation of the GHP at this facility and has the authority to commit the necessary resources to implement this Plan.

_____

Name and/or Title of Responsible Person

The Responsible Person listed above shall ensure that facility personnel involved in any GHP-covered activities identified in this Plan, are provided with access to, and are familiar with, the contents of this Plan.

2.2 Plan Review and Modification

The *"GHP Applicability Certification"* completed for this facility must be reviewed and updated once every permit term, or within one (1) year of substantial changes to a facility's operations that could reasonably contribute to stormwater pollution. Any newly constructed/acquired facility must be assessed within one (1) year of initiating operations at the facility. The facility's GHP must be amended and reissued to the facility within one (1) year of any changes to the facility's *"GHP Applicability Certification"*.

When warranted, the BMP Fact Sheets provided in Section 3.0 may need to be updated or revised. At the same time, additional BMP Facts Sheets may be added. The need for such updates or modifications will be at the discretion of the County's GHP Program Administrator.

2.3 Inspections

The County's MS4 permit requires each facility covered by a GHP to have the following:

1. Written procedures for annually assessing County properties to prevent the discharge of pollutants, spills, and leaks into the County's storm sewer system; and

2. Written procedure for performing stormwater conveyance system inspections and for removing debris that may cause clogging, backups, and flooding.

To meet these requirements, each facility that is covered by a GHP will be required to complete routine site inspections and stormwater conveyance system inspections as detailed below. Facility management will be responsible for ensuring the necessary inspections are completed within the required timeframes, that corrective actions (if needed) are performed, and that records of inspections and completed corrective actions are maintained for at least five (5) years.

2.3.1 GHP Site Inspections

The GHP Site Inspection will be performed to ensure that each GHP-covered facility is being properly maintained and that there are no visible signs of pollutants entering the stormwater system. GHP facilities shall utilize the *"GHP Site Inspection Checklist"*, provided in ***Appendix A*** to complete the required inspection. At a minimum, each facility is to be inspected every five (5) years.

2.3.2 Conveyance System Inspections

Stormwater conveyance systems are generally comprised of curbs and gutters, catch basins, inlet structures, swales, channels, piping, culverts, detention ponds, outfalls, or other structures that are used to collect, contain, and convey stormwater runoff.

The unimpeded movement of stormwater through conveyance systems is critical in avoiding backups and flooding, which can impede facility operations and damage property. Routine inspections and preventative care of stormwater conveyance systems can ensure these systems function as intended and prevent the need for costly and time-consuming repairs and retrofits.

Each GHP-covered facility is required to conduct routine stormwater conveyance system inspections to ensure the free flow of stormwater within the conveyance systems. GHP-covered facilities shall utilize the *"GHP Stormwater Conveyance System Inspection Checklist"*, provided in ***Appendix B*** to complete the required inspections. At a minimum, facility conveyance system inspections are to be conducted every five (5) years.

2.4 Training

As part of the GHP requirements within the County's Phase I NPDES permit, annual training must be provided to all appropriate staff and contractors. Such training shall be provided to any individuals responsible for implementing the GHP, performing the required inspections, or involved in any of the GHP-covered activities identified in this Plan. The required training shall focus on the duties and responsibilities assigned to site personnel in implementing the GHP and the best management practices (BMPs) prescribed in this Plan for preventing, reducing, and eliminating the discharge of pollutants during facility activities.

The County's MS4/GHP Program Coordinator will be responsible for developing the required training and disseminating it to GHP-covered facilities. Each GHP-covered facility will be responsible for identifying staff/contractors who must attend annual training, ensuring identified staff complete the required training, and maintaining records that document training dates and attendees. Training records and other documentation shall be maintained in ***Appendix D*** of this Plan.

3.0 BEST MANAGEMENT PRACTICES (BMPs)

This section contains a BMP Fact Sheet for each of the ten (10) GHP-regulated activities. The County's operations are not limited to the BMPs contained within this document; nor is the County required to implement all of the pollution prevention measures identified within each BMP Fact Sheet. The County should select and implement those measures that are applicable and have the greatest potential for reducing stormwater pollution.

The BMP Fact Sheets contained within this document offer recommended protocols for a particular activity. These pollution prevention measures are considered non-structural BMPs with a focus on source control of potential pollutants.

3.1 Applicability of BMP Fact Sheets

The *"GHP Applicability Certification"* completed for this facility has identified the activities conducted at this facility that require coverage under this Plan. Each of the BMP Fact Sheets shall be marked as to whether they are applicable or not applicable to this facility. The Applicable/Not Applicable indicator on each BMP Fact Sheet can be revised in response to changes in operations at the facility.

3.2 BMP Fact Sheets

BMP Fact Sheets can be found on the following pages. For the sake of consistency, the general outline of a BMP Fact Sheet will be as follows:

- Identification of GHP-covered activity.
- Applicability of the BMP Fact Sheet to the facility.
- A general description of the concern the activity poses to stormwater.
- Recommended pollution prevention measures for reducing/eliminating stormwater pollution.
- Additional sources of information, if applicable.

WASTE MANAGEMENT

Not Applicable ☒ Applicable ☐

CONCERN

Improperly managed waste can allow trash and debris to be washed into storm drains which poses a concern to water quality, marine life, and public health. It also has the potential to create obstructions in the drainage system, which can lead to backups and flooding. Additionally, improper storage and handling of waste materials can allow pollutants including oils and greases, toxic and chemical compounds (including nutrients), bacteria, metals, and other potentially hazardous wastes to enter waterways.

POLLUTION PREVENTION MEASURES

General *(applicable to all waste management activities)*

1) Provide suitable containers, preferably with working covers, to collect waste materials.
2) Ensure that appropriate waste containers are available in areas where waste is generated.
3) Provide a cover over waste storage areas, if feasible.
4) Avoid positioning waste receptacles near storm drains, water bodies, or areas of concentrated runoff.
5) Ensure that lids to waste containers *(if present)* are kept closed to prevent the intrusion of precipitation and prevent trash from blowing out of the receptacle.
6) For waste receptacles, which do not have lids and could leak, containers should be inspected regularly and controls (e.g., containment, spill response, etc.) shall be enacted whenever leaks or dry-weather discharges are observed.
7) Routinely inspect waste containers, roll-offs, compactors, and other waste receptacles for the presence of excessive waste accumulation and overflowing containers.
8) Ensure that wastes accumulating on the ground are placed in a suitable waste container.
9) Ensure that wastes are removed from the facility regularly by a licensed and contracted vendor.
10) Repair or replace damaged waste container lids.

Trash Compactors

1) Routinely inspect trash compactors for malfunctioning equipment or leaking hydraulic oil and provide the appropriate spill response if leaking equipment is encountered.
2) Regularly inspect compactors for leaking fluids and implement appropriate controls such as spill response/cleanup, collection or diversion of released fluids, providing secondary containment, etc. whenever leaks or dry-weather discharges are observed.

Scrap Metal Collection Containers

1) Avoid placing oily or grease-covered items in uncovered scrap metal recycling collection containers. If needed, wrap oily/greasy items in plastic garbage bags before placing them in the collection container.

Hazardous/Universal Wastes

1) Ensure that hazardous waste and universal wastes (e.g., batteries, bulbs, etc.) are collected and stored indoors or within covered collection containers.
2) Verify that hazardous/universal waste collection containers are in good condition, not leaking, and compatible with the wastes being stored.

Street Sweeping / Vactor Truck Material Storage

1) Do not site storage areas near storm drains, open water bodies, or areas of concentrated runoff.
2) Install sediment control devices (e.g. silt fence, silt socks, hay bales, etc.) around the staging area. Inspect these controls regularly and replace them as needed.
3) Cover the materials staging area, if feasible.
4) Provide oil-absorbent booms if necessary to control oily discharge. Inspect and replace booms regularly.
5) The staging area should be checked periodically for evidence of sediment migrating outside of the staging area. Material that has migrated out of the staging area should be promptly swept and returned to the staging area or disposed of.

Waste Cooking Oil/Grease

1) Maintain storage containers indoors or within a covered location, if feasible.
2) Storage containers shall be secured to prevent infiltration of precipitation and accidental/intentional spills or releases.
3) Carefully transfer waste oil/grease to the appropriate collection container to avoid spills.
4) Maintain suitable spill response equipment near collection containers. Immediately clean up any spilled oil/grease. Keep the exterior of the collection container clean and free of spilled oil/grease.
5) Provide secondary containment for collection containers, if feasible.

VEHICLE AND EQUIPMENT STORAGE

Not Applicable ☒ Applicable ☐

CONCERN

Vehicles and equipment may be stored onsite to support various County operations (e.g., construction, maintenance, snow removal, roadside assistance, mass transit, mowing, etc.). Examples of County owned and operated vehicles and equipment stored onsite at any given time include but are not limited to, the following: cars, trucks, buses, emergency response vehicles, garbage trucks, heavy equipment (backhoes, frontend loaders, etc.), forklifts, towable generators, portable light stands, and roadside equipment. Vehicle and equipment storage is considered a pollutant source due to the potential for incidental releases of petroleum products, lubricants, and various automotive fluids.

POLLUTION PREVENTION MEASURES

1) When possible/practical, store vehicles and equipment inside or under cover to prevent exposure to precipitation.
2) If vehicles or equipment must be stored outside, store vehicles/equipment in designated areas away from areas of concentrated runoff, storm drains, and other stormwater conveyances.
3) Vehicles and equipment shall be staged on impervious (asphalt or concrete) surfaces;
4) Keep truck beds clean and ensure potential stormwater pollutants are stored in closed containers, covered, or otherwise protected from stormwater exposure.
5) Conduct routine visual inspections of vehicles and equipment for the presence of leaks and respond accordingly.
6) Leaking vehicles/equipment should be moved inside or under cover. At a minimum, drip pans or absorbent pads shall be used to contain the leak until the vehicle/equipment can be relocated and the leak addressed.
7) Drain all fluids from wrecked or heavily damaged vehicles and equipment before storage.
8) Have an adequate supply of appropriate spill response equipment readily available and clean up all spills and leaks immediately utilizing dry cleaning techniques (e.g. absorbents and brooms).
9) Train staff in spill response so that incidents are addressed in a timely fashion.
10) Do not wash down areas where leaks have collected on ground surfaces; use dry cleaning methods such as granular absorbents and brooms.

VEHICLE AND EQUIPMENT REFUELING

Not Applicable ☒ Applicable ☐

CONCERN

Refueling activities associated with County vehicles and equipment can result in a discharge of fuel (gasoline and diesel fuel), which has the potential to enter the storm drain system and/or a nearby waterway. Such releases can introduce hydrocarbons, metals, and other toxic chemicals to stormwater runoff.

POLLUTION PREVENTION MEASURES

General Procedures *(applicable to all refueling activities)*

1) Routinely *(at least daily)* inspect the fuel dispensing area for any spills or leaks.
2) Routinely inspect fuel dispensing equipment looking for leaking or damaged equipment. Damaged or malfunctioning equipment shall be taken out of service until it has been repaired.
3) Fuels will only be dispensed into authorized vehicles, equipment, and approved containers.
4) Vehicle operators must remain outside of their vehicles and in attendance of fuel dispensers at all times while dispensing fuel.
5) Third-party contractors must be trained in proper refueling procedures and pollution prevention.
6) Do not utilize a foreign object to keep the dispenser nozzle in the open position. If present, a “hold-open” latch on the nozzle may be used.
7) Do not “top off” a vehicle’s fuel tank once the dispenser nozzle’s automatic shut-off has been activated. Topping off tanks may result in spills. Post signs in fueling areas warning vehicle operators against "topping off" of vehicle fuel tanks.
8) After refueling has stopped, allow several seconds to pass before removing the nozzle and returning it to the dispenser. This will prevent incidental dripping from the nozzle.
9) Employees refueling vehicles shall note the location of the “Emergency Fuel Shut Off” switch, to be used to stop the flow of fuel to the dispensers in the event of a release or emergency.
10) Have an adequate supply of appropriate spill response equipment readily available and clean up all spills immediately utilizing dry cleaning techniques (e.g. absorbents and brooms).
11) Immediately clean up and dispose of used absorbent material.
12) Do not wash down fueling areas; use dry cleaning methods such as granular absorbents and brooms.
13) Conduct refueling activities over impervious (e.g. concrete) surfaces. Place drip pans or absorbent pads under the nozzle if fueling occurs over a permeable surface such as grass or soil.
14) Install oil control devices in storm drains that may receive contaminated runoff from fueling areas.
15) Cover fueling areas with a canopy or roof to prevent direct contact with rainfall. Direct run-on away from fueling areas and collect fueling area run-off in a dead-end sump or oil-water separator.

Mobile Equipment Refueling

1) Refuel equipment on an impervious surface, downgradient of, and at the farthest practical distance from any storm drain, stormwater conveyance, stormwater management feature, or waterway.
2) Utilize secondary containment when refueling equipment (when practical).
3) Ensure mobile refuelers are parked in designated locations and away from areas of concentrated run-off, storm drains, and other stormwater conveyances.
4) Ensure that procedures are in place and that staff is properly trained in spill response/cleanup so that leaks and spills are addressed appropriately and promptly.

VEHICLE MAINTENANCE

GH-04

Not Applicable ☒ Applicable ☐

CONCERN

Vehicle and equipment maintenance can impact the water quality of nearby waterways by exposing stormwater to various pollutants including petroleum hydrocarbons, solvents, antifreeze/coolants, used oil, lubricating oil, grease, brake fluid, metals, and various chemicals. Additionally, vehicles that are wrecked or awaiting repair can be a source of pollution if leaking fluids are not properly controlled.

POLLUTION PREVENTION MEASURES

1) Conduct vehicle and equipment maintenance activities indoors.
2) Make sure incoming vehicles and equipment are inspected for leaking fluids and oil.
3) Move leaking vehicles or equipment indoors or under cover as soon as possible. At a minimum, a drip pan or absorbent pads shall be utilized to contain the leak until the vehicle/equipment can be relocated and the leak addressed.
4) Avoid performing maintenance on vehicles in close proximity to exterior doorways, which may allow released fluids to migrate outdoors.
5) Have an adequate supply of appropriate spill response equipment readily available and clean up all spills and leaks immediately utilizing dry cleaning techniques (e.g. absorbents and brooms).
6) Keep maintenance areas neat and well organized. Remove dirt, debris, and used absorbent regularly.
7) Inspect maintenance areas as well as maintenance equipment on a routine basis.
8) Store vehicles, parts, and generated wastes indoors or off the ground and under cover whenever possible. When practical, provide secondary containment.
9) Promptly transfer used fluids to the proper waste container; do not leave full drip pans or other open containers around the shop. Empty and clean drip pans and containers regularly.
10) Waste liquids shall not be poured into floor drains, sinks, outdoor storm drain inlets, or other storm drains or sewer connections. Liquid wastes are to be collected in properly labeled containers and disposed of by a licensed waste hauler or other appropriate method.
11) Store leaking batteries in a sealed container and provide secondary containment, if feasible.
12) Clean all parts indoors utilizing a self-contained parts washer.
13) Do not hose down indoor service areas to storm drains or areas where it can seep into groundwater.
14) Maintain floor drains in good working order and inspect for proper function on a routine basis. Consider plugging floor drains that discharge to the storm sewer.
15) Ensure oil/water separators (if present) are maintained in proper working order and are checked on a routine basis for the presence of oil.
16) If maintenance work must be performed outdoors, adhere to the following requirements:
    - Conduct maintenance activities over an impervious surface, away from stormwater inlets.
    - Cover outdoor maintenance areas and direct stormwater run-on away from the area.
    - Use drip pans or drop cloths underneath the equipment to catch leaks and drips.
    - Have an adequate supply of appropriate spill response equipment readily available.
    - Clean all spills immediately using dry cleaning techniques (e.g. absorbents and brooms).
    - Avoid performing maintenance activities during precipitation events.
    - Limit temporary outdoor maintenance activities to a single shift/day if additional time is needed to cover the work area at the end of each day/shift.

BMP Fact Sheet

VEHICLE AND EQUIPMENT WASHING

GH-05

Not Applicable ☒ Applicable ☐

CONCERN

Vehicle and equipment washing can generate washwater that contains oil, grease, organic compounds, surfactants, phosphates, metals, and suspended solids. If vehicles/equipment are washed outdoors on impervious surfaces, dirty washwater can contaminate stormwater that ends up in waterways. Washing equipment over pervious surfaces can allow washwater to seep into the ground contaminating groundwater.

POLLUTION PREVENTION MEASURES

1) Vehicle and equipment washing should only be conducted in designated indoor wash bays that capture and recycle washwater to the extent practical.
2) Wastewater from the washing facility should be discharged to the sanitary sewer system under the authorization of a wastewater discharge permit issued by the local municipal authority.
3) The floor of indoor vehicle wash bays should be completely bermed or sloped to collect wash water and prevent migration outdoors.
4) No other activities (e.g., fluid changes, repairs, material storage) shall be performed in wash areas.
5) Keep the wash bay neat and well organized. Sweep or pick up all trash and debris daily or as needed.
6) Solid materials accumulated on vehicles or in vehicle beds (e.g. salt, soil, grass, etc.) shall be knocked off or otherwise removed from the vehicle (while inside the wash bay) prior to washing. Solid materials shall be collected and disposed of properly.
7) For vehicles too large to completely fit in the wash bays, only the portion of the vehicle physically located in the confines of the wash bay shall be cleaned. The vehicle shall then be rotated to allow for the remaining portion of the vehicle to be washed.
8) Use nozzles that automatically turn off water when not in use and consider high-pressure, low-volume sprays.
9) Avoid detergents as much as possible. If detergents are necessary, use a biodegradable, phosphate-free detergent.
10) If discharging to an oil-water separator, use a non-emulsifying detergent.
11) Inspect floor drain systems, holding tanks, and conveyances associated with designated wash areas regularly. Maintain oil/water separators and/or process flowthrough separators on a routine basis.
12) Use commercial car washes when vehicle or equipment washing cannot be performed onsite without causing impacts to stormwater.
13) If washing must occur onsite and outdoors, use a designated impervious area that is marked with posted signs indicating proper washing procedures. This area must be bermed to contain the wash water and graded to direct the wash water to the sanitary sewer, an oil-water separator, a holding tank, a dead-end sump, or other containment area. Captured water shall be disposed of properly.
14) Avoid steam cleaning and engine/undercarriage washing which can produce high pollutant concentrations. If steam cleaning or engine washing is necessary, perform such cleanings within isolated indoor areas, and ensure wash water is treated and discharged to the sanitary sewer (if permitted to do so) or captured for off-site disposal.
15) Train staff in proper washing techniques and how to confine washing to designated wash areas.
16) Consider alternatives to washing such as using air to blow grass and debris from small equipment, wet-wiping equipment with rags, etc.

BMP Fact Sheet

MATERIAL STORAGE

GH-06

Not Applicable ☒ Applicable ☐

CONCERN

The storage of petroleum products, chemicals, paints, cleaners, pesticides, fertilizers, bags of erodible materials like sand, cement, and soil, and other potential pollutants can negatively impact surface waters through the accidental releases or leaching of materials into stormwater. Unprotected outdoor storage areas can generate a wide range of stormwater pollutants, such as sediment, nutrients, toxic materials, and petroleum products.

POLLUTION PREVENTION MEASURES

1) Whenever possible, store containers (e.g. drums, bins, bags, cans, and totes) indoors or under cover to limit exposure to stormwater.
2) Designate specific areas for material delivery and storage that are away from heavy traffic areas, storm drains, stormwater conveyances, and areas of concentrated run-off.
3) Designated outdoor storage areas should be paved or consist of an impervious surface.
4) Provide secondary containment for materials whenever possible or required per regulation.
5) Store materials on pallets to prevent stormwater run-on from coming into contact with materials, prevent container corrosion, and allow for better leak detection. Pallets must be in good condition and promptly replaced once damaged or deteriorated.
6) Stack containers according to the manufacturer's recommendations to avoid damage.
7) Immediately replace damaged, corroded, or leaking containers.
8) Ensure all storage containers are clearly labeled with their contents.
9) Keep containers tightly sealed after use.
10) Maintain an accurate inventory of hazardous substances and limit on-site storage to that which is necessary to support facility operations.
11) Keep storage areas neat and well organized; remove debris and unneeded material promptly.
12) If empty drums are stored outdoors, ensure that all openings are equipped with caps to prevent water intrusion and that the drum/storage area is labeled "Empty Drums".
13) Have an adequate supply of appropriate spill response equipment readily available and clean up all spills and releases immediately utilizing dry cleaning techniques (e.g. sweeping/absorbents).
14) Clean up all migrating dry materials upon discovery and address the source of the release.
15) Provide perimeter controls (e.g., berms, rock check dams, etc.) for erodible stockpiles of materials such as mulch, sand, and gravel to prevent migration into the stormwater system.
16) Routinely inspect material storage areas for leaks, material migration, and damaged or corroded containers. Ensure that secondary containment and other perimeter controls are in satisfactory condition.
17) Additional visual inspections of outdoor storage areas should be conducted after significant rainfall events (i.e., greater than 0.5 inches).

BMP Fact Sheet

ABOVEGROUND STORAGE TANKS

GH-07

Not Applicable ☐ Applicable ☒

CONCERN

Aboveground storage tanks (ASTs) may be used to store fuels, automotive fluids, chemicals, or deicing fluids. Leaks from tanks, piping, or other equipment and releases during fluid transfers can all impact stormwater quality. It is critical to maintain ASTs in good working condition to prevent spills and/or releases from occurring. Improperly managed storage tanks can cause significant environmental impacts.

POLLUTION PREVENTION MEASURES

General *(applicable to all storage tanks)*

1) ASTs should be installed and maintained in accordance with COMAR 26.10 and applicable fire codes.
2) ASTs should be provided with secondary containment, whenever feasible or required by regulation.
3) Secondary containment areas shall be maintained clean and dry; drain valves must be kept closed; accumulated liquid shall only be discharged if there are no visible signs of impacts, and in accordance with applicable regulations.
4) Inspect ASTs monthly to identify any leaking or malfunctioning equipment and ensure tanks are functioning as designed.
5) ASTs shall be equipped with a form of liquid-level detection (i.e. sight gauge, electronic monitoring).
6) ASTs shall be equipped with overfill prevention (i.e. overfill alarm and/or overfill prevention valve).
7) Tanks and piping should be protected from vehicle impact via barriers, bollards, guard rails, etc.
8) Install ASTs on solid foundations over impervious surfaces, and away from areas of concentrated run-off, storm drains, and other stormwater conveyances.
9) Properly label all storage tanks (e.g., contents, capacity, etc.).
10) Keep remote fills and fill port spill buckets clean and dry.
11) Keep fill ports, gates, and tank areas secured when not in use to prevent fuel theft and tampering.
12) Have an adequate supply of appropriate spill response equipment readily available and clean up all spills and leaks immediately utilizing dry cleaning techniques (e.g. absorbents and brooms).
13) Facilities that maintain 1,320 gallons or more of aboveground oil products shall prepare and implement a Spill Prevention, Control, and Countermeasure (SPCC) Plan, per 40 CFR 112.
14) Facilities that maintain 1,000 gallons or more of used oil or 10,000 gallons or more of virgin oil in ASTs shall obtain an Individual Oil Operations Permit from the MDE, per COMAR 26.10.01.09.
15) Owners/Operators of facilities that maintain more than 2,500 gallons of oil in ASTs are required to register each AST with MDE, per COMAR 26.10.01.10.

Bulk Fluid Transfers (Deliveries)

1) All bulk fluid transfer operations shall be performed under the direct supervision of knowledgeable County personnel. At no time shall the delivery vehicle or delivery vehicle operator be unsupervised.
2) The product level within the tank must be measured and available capacity verified before delivery.
3) Deliveries shall be made via fill ports equipped with catch basins to capture drips and spills.
4) Ensure an adequate supply of appropriate spill response equipment is readily available.
5) Post signs in delivery area displaying proper delivery procedures and emergency contact information.

ABOVEGROUND STORAGE TANKS

Used Oil Tanks

1) County personnel must verify the level of product in used oil tanks prior to filling.
2) Used oil tanks should only be filled via designated fill ports. Pumping used oil into the tank via a closed piping system is preferred to manually pouring used oil into the tank.

Brine Tanks

1) If multiple tanks are located onsite, the tanks should be plumbed to ensure that the complete failure of one tank will not drain all the tanks in the system (tanks must be isolated).
2) Minimize seeping and leaking at fittings by properly supporting piping and fittings, using flexible connectors or hoses to reduce stress, and installing corrosion-resistant fittings.
3) Consider placing hoses in non-permeable trenches or using drip-less nozzles to reduce repeated small spills.

RESIDENT DROP-OFF CENTER

Not Applicable ☒ Applicable ☐

CONCERN

Resident Drop-Off Centers are publicly accessible facilities where residents can drop off used automotive fluids (i.e. oil or antifreeze), municipal waste, recyclable, and/or organic waste, typically free of charge. Improper transfer or management of the waste materials can allow a number of pollutants including oils and greases, toxic and chemical compounds, nutrients, metals, and other wastes to enter waterways.

POLLUTION PREVENTION MEASURES

General *(applicable to all materials collected)*

1) Clearly identify waste materials accepted by the facility, and clearly mark designated collection areas.
2) Waste material should be inspected by a County representative, prior to disposal.
3) Avoid positioning waste receptacles near storm drains, water bodies, or areas of concentrated runoff.
4) When practical, receiving areas should be covered.
5) Do not allow containers to overflow or waste materials to accumulate on the ground.

Automotive Fluid Collection

1) Used oil, antifreeze, and automotive fluid receiving areas should be on impervious surfaces, covered, and provided with secondary containment, which shall be maintained clean and dry.
2) Provide lidded waste receptacles in the receiving area for the public to dispose of empty containers. Waste receptacles shall be emptied routinely and waste disposed of properly.
3) Collection areas shall be inspected daily and all trash and spilled liquids appropriately cleaned up.
4) The available capacity of waste liquid collection containers shall be routinely verified and waste removals scheduled, as needed.
5) Install appropriate controls to prohibit the overfilling of waste fluid collection containers.
6) Place appropriate spill response equipment in close proximity to drop-off areas.
7) If aboveground tanks are used to collect waste fluids, refer to BMP Fact Sheet GHP-07 (Aboveground Storage Tanks) for additional recommendations.

Organic Debris Collection

1) Routinely transfer collected organic debris/waste to a composting or disposal facility.
2) Do not permit composting of organic waste except at properly designed and permitted facilities.
3) Enact controls to prevent leaves and other windblown debris from entering stormwater inlets.

Municipal Waste / Recyclables Collection

1) Refer to BMP Fact Sheet GHP-01 (Waste Management) for additional recommendations.

BMP Fact Sheet

STOCKPILES

GH-09

Not Applicable ☒ Applicable ☐

CONCERN

The County may stockpile various erodible materials, the type of material can vary depending on the needs of the County. Stockpiled material may include soil, sand, millings, slag, cinders, sawdust, landscaping bark, compost, etc. Exposed stockpiles can easily erode due to wind or precipitation and contribute suspended solids to stormwater runoff.

POLLUTION PREVENTION MEASURES

1) Maintain stockpiles of erodible materials within roofed storage buildings or covered storage bins, if feasible. If not, stockpile material on an impervious surface and cover the stockpile.
2) Temporary stockpiles should be placed on an impermeable membrane (tarp) for quick clean-up.
3) Locate stockpiles away from drain inlets, catch basins, swales, areas of concentrated stormwater flow, water bodies, and environmentally sensitive areas.
4) Divert stormwater flows away from/around the stockpiles using a diversion device (e.g., temporary swale, berm, sandbags, or diversion fence).
5) Cover temporary stockpiles of erodible materials with a tarp that has been adequately secured. The covers must be in place at all times when the stockpile is not in active use.
6) When accessing a portion of the stockpile, only remove a section of the cover to minimize exposure to the elements.
7) Use barriers to isolate stockpiled materials from high-traffic areas to prevent tracking of materials.
8) Sweep (do not wash or hose down) in front of material stockpile storage areas at regular intervals, following loading and unloading activities, and during times of heavy use.
9) If material is observed migrating from the stockpile, clean up all migrated material upon discovery and provide additional controls to reduce migration from the stockpile. If such measures are ineffective implement controls to capture pollutants before they migrate off-site (e.g. silt fencing, inlet filters, filter socks, at-grade inlet protection, etc.).
10) Minimize material stockpile inventory based on historical inventory/usage records and public safety operational needs.
11) Cold mix asphalt shall be stored on and covered with plastic sheeting or comparable material.
12) Routinely inspect outdoor material stockpiles to verify existing controls are functioning properly and for signs of erosion or material transport.

BMP Fact Sheet

DEICING MATERIALS

GH-10

Not Applicable ☒ Applicable ☐

CONCERN

When salt and other de-icing materials are stored outside and uncovered, they have a much higher risk of being eroded and transported offsite by stormwater. Improper de-icing material and sand storage may result in stormwater runoff containing elevated concentrations of sodium chloride and dissolved solids. Sodium chloride (e.g., road salt) is an effective deicer but can be highly corrosive to stormwater facilities. Smaller waterways are at a higher risk to increases in salinity, which can threaten aquatic species. Additionally, runoff containing sodium chloride has the potential to reach drinking water sources where small traces can adversely impact public health.

POLLUTION PREVENTION MEASURES

1) Bagged de-icing chemicals must be stored indoors. If stored outdoors bags must be kept on pallets (off the ground) and covered at all times. Bags must be intact without holes or openings.
2) Bulk de-icing materials shall be stored under cover and on an impervious surface.
3) Bulk salt storage areas/buildings shall not be overfilled so that salt spills out beyond the entrance of the storage area/building.
4) Bulk salt storage areas/buildings shall be maintained in a structurally sound condition and in a way that prevents the release of salt and the infiltration of stormwater. Deicing materials should not touch the sides of metal storage containers.
5) Barriers such as berms, gates, knee walls, tarps, and/or straw bales shall be placed at the entrances of bulk salt storage areas/buildings to prohibit the migration of salt and prevent contact with precipitation/stormwater runoff.
6) Routinely inspect storage areas for migrating materials or deterioration of containment structures. Sweep up all migrating materials upon discovery and repair the source of the migrating pollutant.
7) Loading areas should be constructed of impervious material and covered or enclosed, to the extent practical, to reduce potential contact with stormwater.
8) Minimize the distance de-icing materials are transported during loading/unloading activities.
9) Prevent and/or minimize the spillage of salt and de-icing materials during loading/unloading activities, immediately clean spilled or tracked materials.
10) Sweeping of storage and loading/unloading areas shall be conducted immediately following loading/unloading activities.
11) Do not store de-icing materials (bulk or bagged) over or immediately adjacent to drains or waterways.
12) Control site drainage by diverting stormwater run-on away from storage/loading areas using appropriate measures (e.g., curbing, berms, etc.).
13) Slope storage/loading areas to direct salt-contaminated runoff to an appropriate collection area, and in a manner that prevents the runoff from reaching adjacent soil or surface waters.
14) Excess salt shall be removed from salt handling equipment (trucks, spreaders, etc.) following use/prior to storage. All cleaning shall occur on an impervious surface, which is sloped or curbed to contain any washwater and direct it to a collection area for recycling or proper disposal.

Appendix A

GHP Site Inspection Checklist

GOOD HOUSEKEEPING PLAN (GHP)
SITE INSPECTION CHECKLIST

Facility Name: _____ **Inspection Date:** _____

Inspector Name: _____ **Inspector Signature:** _____

- The intent of this inspection is to ensure that the site is being properly maintained and that there are no visible signs of pollutants entering the stormwater system.
- **A shaded status box designates an item in a non-compliant status. Please provide an explanation for all non-compliant items and subsequently document all corrective actions performed.**
- Retain the completed checklists for five (5) years.

Item	Status			CORRECTIVE ACTIONS/COMMENTS *Items which cannot be corrected immediately must be reported to the GHP/NPDES Program Manager*
	Yes	No	N/A	
GENERAL HOUSEKEEPING				
1. Are exterior areas of the facility free of accumulated trash, debris, and unneeded materials?				
2. Are stormwater drains and inlets free from debris, sediment, and evidence of spills/releases?				
3. Is the facility free from signs of erosion?				
4. Are paved surfaces free of accumulated sediment?				
5. Is spill response equipment available in maintenance areas, fueling areas, hazardous material storage areas, and/or other required areas?				
6. Are spill kits and absorbent materials clearly labeled and accessible (i.e. items are not piled on top of or in front of spill kits)?				
7. Are spill kits secured from being stolen or misused?				
8. Is there a labeled container present for the disposal of used spill cleanup material?				

GOOD HOUSEKEEPING PLAN (GHP)
SITE INSPECTION CHECKLIST

Item	Status			CORRECTIVE ACTIONS/COMMENTS *Items which cannot be corrected immediately must be reported to the GHP/NPDES Program Manager*
	Yes	No	N/A	
9. Does spill response equipment (i.e. spill kits, absorbent materials) need to be replenished?				
WASTE MANAGEMENT				
10. Are areas around solid waste containers/roll-offs/compactors free of excessive trash accumulation or overflowing containers?				
11. Are areas around solid waste containers/roll-offs/compactors free of visible evidence (i.e. leaks, staining) of ongoing stormwater pollution?				
12. Are scrap metal containers in good order and free from evidence of leaking oil/grease?				
13. For dumpsters, roll-offs, and other waste receptacles, where leaks are observed, have appropriate controls (e.g. containment, spill response, etc.) been enacted?				
14. Are the lids (if present) to solid waste containers closed?				
15. Is street sweeping/vactor waste being managed appropriately (i.e. no evidence of material migration)?				
16. Is waste cooking grease managed appropriately (i.e. no evidence of spilled material or excessive staining)?				
VEHICLE & EQUIPMENT STORAGE				
17. Are stored vehicles/equipment free from leaks?				
18. If leaks are present, are they being managed appropriately (drip pan or other methods in place to capture released liquids)?				
19. Are storage areas free of visible evidence of chronic leaks/spills (i.e. significant staining)?				

GOOD HOUSEKEEPING PLAN (GHP)
SITE INSPECTION CHECKLIST

Item	Status			CORRECTIVE ACTIONS/COMMENTS *Items which cannot be corrected immediately must be reported to the GHP/NPDES Program Manager*
	Yes	No	N/A	
VEHICLE & EQUIPMENT REFUELING				
20. Are the areas around refueling areas free from evidence of spills or leaks?				
21. Are refueling areas free of used absorbent material that has not been swept/cleaned up?				
22. Do fuel dispensers and hoses appear to be in good working order and well-maintained?				
VEHICLE MAINTENANCE				
23. Is there any indication that vehicle maintenance activities are being conducted outdoors?				
24. Is there any indication that vehicle maintenance activities are contributing to stormwater pollution?				
VEHICLE & EQUIPMENT WASHING				
25. If performed on-site, does all vehicle/equipment washing occur indoors?				
26. Is wash water collected and disposed of properly?				
27. Is there any indication that vehicle/equipment wash water is being released to stormwater conveyances or pervious areas?				
MATERIAL STORAGE				
28. Are all outdoor storage areas free from visible signs of leaks or spilled material?				
29. Are material storage containers in good condition?				

GOOD HOUSEKEEPING PLAN (GHP)
SITE INSPECTION CHECKLIST

Item	Status			CORRECTIVE ACTIONS/COMMENTS *Items which cannot be corrected immediately must be reported to the GHP/NPDES Program Manager*
	Yes	No	N/A	
30. Are drums, totes, and other containers (that are <u>not</u> empty) stored off the ground and covered, or stored indoors?				
31. Are liquid-containing drums/totes located outdoors provided with secondary containment?				
32. Are containers that are located outdoors equipped with closed lids except when material transfers are occurring?				
33. Are materials, which could impact stormwater, stored away from heavy traffic areas, or protected from vehicle collisions?				
34. Are chemical storage containers properly labeled?				
35. If empty drums are stored outside, are all openings equipped with caps to prevent water intrusion?				
ABOVEGROUND STORAGE TANKS				
36. Are all storage tanks, and surrounding areas free from visible signs of leaks or spilled material?				
37. Do storage tanks appear to be in good working order (e.g. free of obvious signs of damage or malfunctioning equipment)?				
38. Are remote fills associated with tanks free of liquid and debris?				
RESIDENT DROP-OFF CENTERS				
39. Are waste collection areas clearly identified?				
40. Are used oil/antifreeze collection tanks, containment structures, and surrounding areas free from visible signs of leaks or spilled material?				

GOOD HOUSEKEEPING PLAN (GHP)
SITE INSPECTION CHECKLIST

Item	Status			CORRECTIVE ACTIONS/COMMENTS *Items which cannot be corrected immediately must be reported to the GHP/NPDES Program Manager*
	Yes	No	N/A	
41. Do used oil/antifreeze collection tanks appear to be in good working order (e.g. free of obvious signs of damage or malfunctioning equipment)?				
42. Are empty used oil/antifreeze containers being collected and disposed of in the trash?				
43. Are areas around waste/recyclables containers free of excessive trash accumulation or overflowing containers?				
44. Are areas around waste/recyclables containers free of visible evidence (i.e. leaks, staining) of ongoing stormwater pollution?				
45. Are organic debris collection areas free of visible evidence of ongoing stormwater pollution (e.g. leaves and debris in stormwater conveyances)?				
STOCKPILES				
46. Are material piles, including salt, soil, sand, and millings isolated (i.e. covered, bermed, etc.) to prevent stormwater run-on and run-off?				
47. Are areas surrounding material piles (e.g. salt, soil, sand, millings, etc.) free of tracked or migrated material?				
DEICING MATERIALS				
48. Are all deicing materials stored indoors or undercover?				
49. Are salt storage structures in good condition (e.g. no evidence of material escaping or stormwater infiltration)?				
50. Is the salt loading area clean?				

GOOD HOUSEKEEPING PLAN (GHP)
SITE INSPECTION CHECKLIST

Item	Status			CORRECTIVE ACTIONS/COMMENTS *Items which cannot be corrected immediately must be reported to the GHP/NPDES Program Manager*
	Yes	No	N/A	
51. If deicing materials are tarped, is the tarp secure and covering the entire pile?				
52. Are bags of salt stored indoors, or off the ground and covered?				

ADDITIONAL COMMENTS:

Appendix B

GHP Stormwater Conveyance System Inspection Checklist

GOOD HOUSEKEEPING PLAN (GHP)
STORMWATER CONVEYANCE SYSTEM INSPECTION CHECKLIST

Facility Name: _____ **Inspection Date:** _____

Inspector Name: _____ **Inspector Signature:** _____

- The intent of this inspection is to ensure the free flow of stormwater within on-site conveyance systems and prevent damage/flooding.
- **If maintenance is needed, please provide an explanation, and document all corrective actions performed.**
- **Inspections shall include visually accessible infrastructure only; at no time shall inspection personnel enter a confined space.**
- Retain the completed checklists for five (5) years.

Item	Item Checked (Y/N/NA)	Maintenance Needed (Y/N)	CORRECTIVE ACTIONS/COMMENTS *Items which cannot be corrected immediately must be reported to the GHP/NPDES Program Manager*
CATCH BASINS / INLETS			
1. Look for debris and sediment blocking catch basin grates. If found, remove.			
2. Look for damage or cracks to the frame, grate, basin walls or bottom. If found, schedule repairs or replacement.			
3. Look for sediment and debris in the catch basin sump. If sediment fills 60% of the sump or comes within 6” of a pipe it should be scheduled for cleaning.			
4. If any type of filtering device is present, verify that the filter is not clogged, torn, or damaged; clean if clogged, replace if damaged.			
PIPES / CULVERTS			
5. Look for evidence of clogged piping (e.g. visual obstructions, standing water within manholes/inlets structures, etc.). If found, remove or schedule cleaning.			
6. Verify vegetation growth, if present, does not impede water flow. If it does, mow, cut back, or remove.			

GOOD HOUSEKEEPING PLAN (GHP)

STORMWATER CONVEYANCE SYSTEM INSPECTION CHECKLIST

Item	Item Checked (Y/N/NA)	Maintenance Needed (Y/N)	CORRECTIVE ACTIONS/COMMENTS *Items which cannot be corrected immediately must be reported to the GHP/NPDES Program Manager*
7. Inspect for damaged piping, inlets, outlets, headwalls, wingwalls, or excessive erosion. If found, make or schedule repairs.			
DITCHES / TRAPEZOIDAL SWALES			
8. Check for erosion, slumping, or undercutting. If found, make or schedule repairs.			
9. Look for trash and sediment accumulation. Remove all trash and remove sediment if it will impede water flow or clog downstream structures.			
10. Verify vegetation growth does not impede water flow. If it does, mow, cut back, or remove. Remove any trees or shrubs growing within the ditch.			
11. Check the integrity of check dams, filter socks, or other flow dissipation/filtering devices within the ditch or swale. Perform or schedule service if they are clogged, damaged, or deteriorated.			
12. Check inlets and outlets for debris accumulation, damage, or erosion. If found, make or schedule repairs.			

ADDITIONAL COMMENTS:

GUIDANCE DOCUMENT
GOOD HOUSEKEEPING PLAN - STORMWATER CONVEYANCE INSPECTIONS

INTRODUCTION

Maintaining catch basins, stormwater inlets, and other stormwater conveyance structures on a regular basis will remove pollutants, prevent backups, and ensure the system functions as intended to avoid flooding.

Each GHP-covered facility is required to conduct routine stormwater conveyance system inspections to ensure the free flow of stormwater within the conveyance system(s). The GHP includes a *"GHP Stormwater Conveyance System Inspection Checklist"*, to be used when completing the required inspections. This document provides additional background and guidance to aid facility personnel in completing the inspections.

CATCH BASINS / INLETS

Catch basins and inlets are all points for stormwater to enter storm drain systems. These structures are typically part of a larger conveyance system with many interconnected components where the impairment of one component can compromise the functionality of the larger system. Inlets and catch basins are subject to functional impairment by a variety of conditions, including:

- Structural damage including from vehicles and plows
- Cracks/joint separation at piping (inlet and outlet) connections
- Leaking due to cracks and joint separation
- Missing or damaged grates and grate frames
- Corrosion
- Blockage caused by debris, sediment, vegetation, or other objects

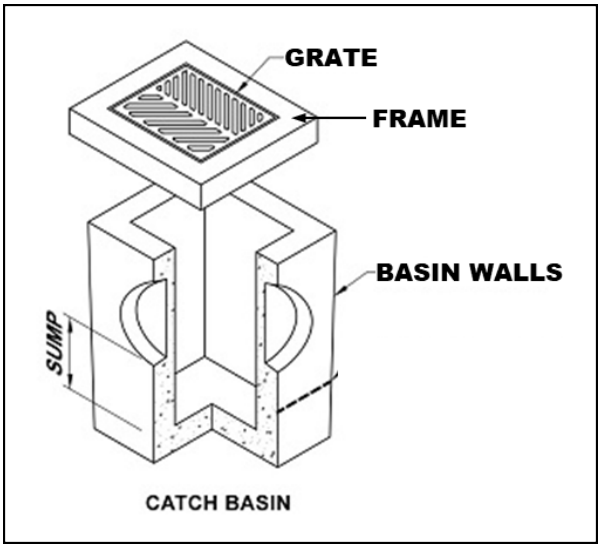

Figure 1 – Catch Basin Diagram

The following photos provide additional information related to the various inspection items, including examples of typical issues that may be encountered. The photo numbers correspond to the inspection checklist item number.

Inspection Item #1 [1]



Debris and sediment blocking inlet/catch basin grate.

Inspection Item #2 [2]



Damaged Grate

Inspection Item #2 [3]



Damaged Frame

Inspection Item #2 [4]



Failing brick walls with a stormwater inlet.

Inspection Item #2 [5]



Failing asphalt surrounding the inlet

[1] Grand Valley State University - https://www.gvsu.edu/groundswell/clogged-storm-drains-71.htm
[2] Georgia Department of Transportation – Stormwater System Inspection and Maintenance Manual, March 2020
[3] https://catchbasinauthority.ca/catch-basin-101/
[4] https://www.fixasphalt.com/catch-basin-repairs
[5] https://ccpia.org/catch-basin-and-manhole-inspections/

Inspection Item #3 [6]



Sediment and debris inside stormwater inlet

Inspection Item #3

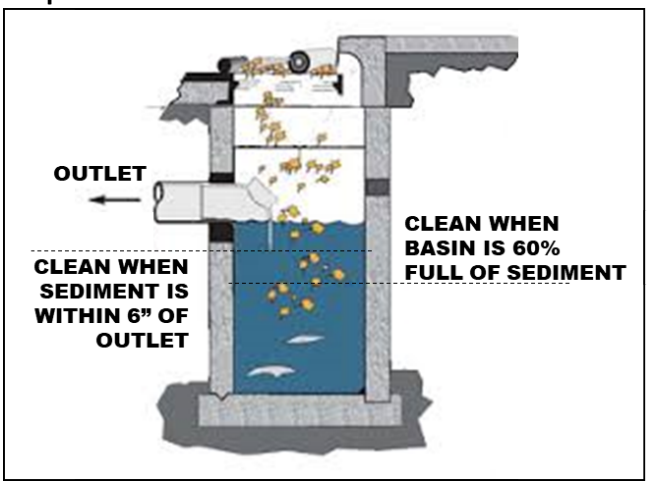

Remove sediment from a catch basin if it fills 60% of the sump or comes within 6" of a pipe.

Inspection Item #4 [7]



Example of inlet filter. Replace when filled or damaged. damaged.

Inspection Item #4 [8]



Example of an inlet filter sock, replace if

PIPES AND CULVERTS

Pipe systems are designed to convey stormwater runoff safely and effectively from inlets to various discharge points and outfalls. A culvert is a structure that channels water under an obstacle such as a roadway or railroad. These structures are subject to functional impairment by a variety of conditions, including:

- Blockage or obstruction due to build up of vegetation, debris, sediment, or other objects
- Cracks and/or joint separation
- Collapsed pipe
- Corrosion
- Root intrusion
- Lack of stabilization

[6] https://www.fixasphalt.com/catch-basin-repairs
[7] https://store.interstateproducts.com/products/Ultra-Drain-Guards/Ultra-Drain-Guard-Adjustable-Frame-Model
[8] https://www.newpig.com/pig-sediment-filter-sock/p/FLT787

Inspection Item #5 [9]



A pipe filled with sediment, inhibiting flow.

Inspection Item #5 [10]



Standing water around an inlet may indicate a blockage.

Inspection Item #6 [11]



Pipe conveyance filled with vegetation.

Inspection Item #7 [12]

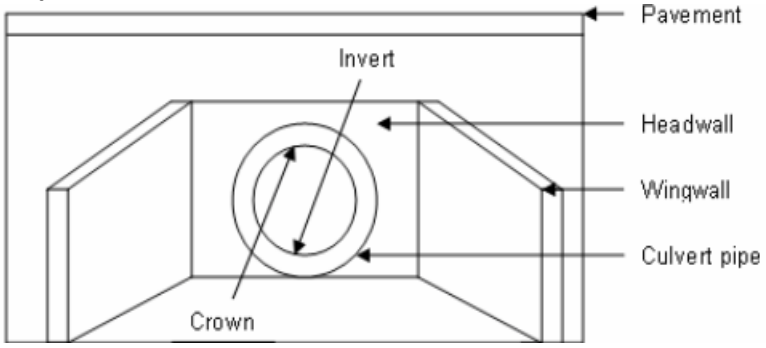

Diagram depicting various components of a culvert.

[9] Georgia Department of Transportation – Stormwater System Inspection and Maintenance Manual, March 2020
[10] https://www3.epa.gov/region9/water/npdes/stormwater-feature.html
[11] Georgia Department of Transportation – Stormwater System Inspection and Maintenance Manual, March 2020
[12] https://www.researchgate.net/figure/Components-of-a-Culvert_fig34_228685906

Inspection Item #7 [13]



A crack is the culvert headwall.

Inspection Item #7 [14]



Evidence of erosion around a culvert.

DITCHES AND SWALES

Ditches and swales serve similar functions. Both are used to convey stormwater. However, there are slight differences. A ditch is a narrow channel typically found along roads and at the edges of parking lots/driveways. A swale is like a ditch, but it is broad and shallow, and usually covered or lined with turfgrass or stone. Issues associated with these structures, which could impede their function include:

- Blockage or obstruction due to vegetation, debris, sediment, or other objects
- Erosion
- Rapidly moving water
- Lack of adequate vegetative cover for grass-lined channels

Inspection Item #8 [15]



Erosion and slumping within a drainage ditch.

Inspection Item #8 [16]



Slumping within a drainage swale.

[13] https://www.sbt-durabi.org/articles/xml/ARN0/
[14] https://lufkindailynews.com/news/local/culverts-crumbling-in-precinct-1/article_a9fed902-4379-5248-ab11-7471e2974298.html
[15] https://graniteseed.com/blog/how-to-stop-a-ditch-from-eroding/
[16] https://www.mnwcd.org/erosion-control

Inspection Item #9 [17]



Litter and debris within a ditch.

Inspection Item #9 [18]



Litter and debris within a swale.

Inspection Item #10 [19]



Cracks and joint separation in concrete channels, removal of vegetation may prevent future damage.

Inspection Item #11 [20]



Rock check dam across a channel.

Inspection Item #11 [21]



Filter sock check dams across a grass swale.

[17] https://craven.ces.ncsu.edu/2023/02/for-those-who-love-to-litter/
[18] https://www.cityoftulsa.org/government/departments/public-works/stormwater-quality/adopt-a-stream/
[19] Georgia Department of Transportation – Stormwater System Inspection and Maintenance Manual, March 2020
[20] EPA Stormwater Best Management Practice, Check Dams, December 2021
[21] EPA Stormwater Best Management Practice, Check Dams, December 2021

Inspection Item #12 [22]



Inlet to a rock-lined swale.

Inspection Item #12 [23]



Sediment accumulation at swale inlet.

END OF DOCUMENT

[22] https://www.stormwater.com/erosion-control/vegetation-management/article/13016118/inlet-protection-during-constructionand-after

[23] https://www.stormwater.com/erosion-control/vegetation-management/article/13016118/inlet-protection-during-constructionand-after

Appendix C

General Spill Response Procedures

SPILL RESPONSE AND NOTIFICATION PROCEDURES

A. Discovery of a Spill

1. Upon discovery of a spill, facility personnel should immediately assess the situation and determine if the spill is considered a "Minor" or "Major" spill. For a spill to be considered "Minor" all the following conditions must be satisfied:

    - ❖ The type of material spilled is known;
    - ❖ The spill is confined to the immediate work area;
    - ❖ The spill has not reached storm drains, sanitary sewer systems, open water, or surrounding soils;
    - ❖ The spill can be safely managed;
    - ❖ The employee can contain and clean up the spill with the PPE that is normally used in the work area;
    - ❖ The spill does not pose a serious threat of fire or an explosion; and
    - ❖ The spill does not pose conditions that are immediately dangerous to life or health.

2. If all the above conditions are met, the spill is considered "Minor". Refer to ***Section B*** of this document for appropriate response actions.

3. If all the above conditions are not met, then the spill is considered "Major". Refer to ***Section C*** of this document for appropriate response actions.

4. If a spill involves flammable liquids, ignitable vapors may be present - precautions must be taken to prevent ignition. Do not turn on or off equipment since sparks may be generated. Additionally, avoid the movement of equipment that could create static electricity. Larger spills of flammable liquids could pose a fire threat and would be considered a "Major" spill. Refer to ***Section C*** for appropriate actions.

B. Response to a "Minor" Spill

1. Identify the source of the spill and the direction in which the spill is heading.

2. Attempt to stop the spill at the source. Where applicable, the source of the spill shall be taken out of service until repairs can be made. If the spill is related to a fuel dispensing system, activate the Emergency Shut-Off (ESO) switch to prevent additional fuel disbursements.

3. If material is released outside a containment area, it is crucial that the material be contained as quickly as possible. Following proper safety procedures, use absorbent materials or diking to contain the spill. Prevent the spill from reaching storm drains, sanitary sewers, or open water. If a spill is flowing toward a drain, install temporary diking around the drain, block off the drain with a drain cover, or place absorbent material around the drain to prevent a discharge.

4. Once the spill has been stopped and contained, estimate the quantity of the spill. Consult applicable Safety Data Sheet (SDS) for material compatibility and environmental precautions. Note and follow recommendations regarding special precautions, spill response equipment, methods, or precautions. All cleanup work shall be conducted in accordance with existing safety protocols and SDS recommendations. Contact the facility Superintendent/Supervisor, or designee, for assistance if needed.

5. Recover or clean up the spilled material as much as possible. Material that cannot be reused must be discarded in accordance with state and federal regulations. Liquids absorbed by porous materials (e.g., wood, gravel, significant quantities of absorbent material, etc.) shall be placed into US DOT-approved 30-gallon or 55-gallon steel drums. Following cleanup, the container shall be secured and appropriately labeled to identify the contents and the date of the spill/cleanup. Containers shall be stored indoors and provided with secondary containment until transported off-site for disposal.

6. For spills that do not involve flammable liquids or other potential hazardous wastes, small quantities of used absorbent materials may be double bagged and disposed of along with municipal trash as long as all liquids have been absorbed (no free liquid may be present).

7. If the spilled material is a flammable liquid, corrosive liquid (pH ≤ 2 or ≥ 12.5), or other potential hazardous waste, all recovered product, impacted material, and used absorbent must be placed into a US DOT-approved containers/drums. Following cleanup, the container(s) shall be secured and appropriately labeled to identify the contents and the date of the spill/cleanup. Containers shall be stored indoors and provided with secondary containment until transported off-site for disposal. The facility Superintendent/ Supervisor, or designee shall be notified that a potential hazardous waste was released and that a waste characterization may be needed to facilitate proper disposal.

8. Surfaces that are contaminated by the spill shall be cleaned utilizing dry absorbent material. Tools and equipment that have been used in the cleanup must be decontaminated immediately after use. Decontamination water (if used) must be minimized, containerized, and disposed of properly.

9. If waste requires disposal, notify the facility Superintendent/Supervisor, or designee who will arrange for the proper characterization and disposal of any waste material. Representative sampling and analysis may be necessary to properly characterize the waste. The waste must be transported and disposed of in compliance with all applicable laws and regulations. Waste manifests, trip tickets, or bills of lading (if required) for waste disposal shall be kept on file.

10. Facility personnel shall restock/replace spill response equipment and absorbent materials used during the clean-up efforts.

11. The facility Superintendent/Supervisor, designee, or other appropriate County personnel shall be notified of the spill in accordance with ***Section D*** of this document.

C. Response to "Major" Spill

A "Major" spill is any discharge that does not meet the definition of a "Minor" spill. Any employee or contractor observing, being involved with, or recognizing a potential or actual spill of oil or other hazardous material, other than a "Minor" spill is responsible for performing the following actions:

1. If there is no danger to human health, attempt to stop and contain the spill at the source. If the spilled material is unknown, if PPE other than that which is typically used in your work area, is necessary to approach the spill area, or if assistance is required to stop the spill, do not attempt to contain the spill. If the spill is related to a fuel dispensing system, activate the Emergency Shut-Off (ESO) switch.

2. Most County employees lack the appropriate training to respond to "Major" spills. If the spill is of an unknown substance, is of a quantity that cannot be safely managed, or poses other risks beyond the training level of the employee, the employee should not attempt to contain or clean up the spill.

3. Evacuate individuals from the area and keep personnel away from the impacted area.

4. Immediately notify the facility Superintendent/Supervisor, or designee of the incident. The notified individual will determine the need for further evacuations and contact emergency response personnel (911), as necessary. *If a situation represents an immediate and grave danger to personnel, the public, structures, or other infrastructure, the individual discovering the incident may call 911 directly without first notifying facility management.*

5. The facility Superintendent/Supervisor or designee will determine if assistance from emergency response contractors is required to clean up the incident and will coordinate such spill response efforts with spill response contractors and other County agencies and first responders.

6. Facility personnel will provide assistance to emergency responders, as appropriate.

D. Reporting a Spill (Internal Notifications)

1. Once a spill is contained and cleanup operations have been initiated, the individual discovering the spill shall notify the appropriate County representatives and provide the following information:

    a) Identify the location, date, and time of the incident;
    b) Identify the type of material spilled or discharged;
    c) Estimate the quantity spilled and the rate of the spill;
    d) Identify the cause of the spill or discharge;
    e) Identify impacted media or infrastructure (soil, storm drains, open water bodies, etc.);
    f) Determine the extent of injuries involved; and
    g) Provide response measures implemented by the facility personnel.

E. Reporting a Spill (Regulatory Notifications)

State of Maryland Reporting Requirements (COMAR 26.10.01.05)

1. Upon discovery of a spill, the Responsible Person shall notify the MDE Emergency Response Division **within two (2) hours** by calling 866-633-4686. The caller shall be prepared to provide the following information:

    a) The time and date of the spill;
    b) The location and cause of the spill;
    c) The mode of transportation or type of facility involved;
    d) Type and quantity of oil spilled;
    e) Details regarding any assistance required;
    f) The name, address, and telephone number of the person making the report; and
    g) Any other pertinent information requested by the Department.

2. MDE will provide further guidance on additional responsibilities.

3. Within **ten (10) working days** of the completed removal and clean-up activities, the Responsible Person shall prepare a report using either County letterhead detailing the incident. The report shall contain the following:

    a) Date, time, and place of the spill;
    b) The amount and type of oil or hazardous substance spilled;
    c) A complete description of circumstances that contributed to the spill;
    d) A complete description of the containment and removal operations performed, including disposal sites to which oil refuse was transported;
    e) Procedures, methods, and precautions instituted to prevent the recurrence of an oil spill from the facility involved;
    f) Any other information considered necessary or required by the MDE for a complete description of the incident; and
    g) A certification that the information provided is true and correct to the knowledge of the person signing the report.

4. The completed report shall be submitted to mdeerd.mema@maryland.gov or faxed to 410-537-3932.

5. A digital copy of the completed report and any accompanying documentation shall be retained

Federal Reporting Requirements - National Response Center (40 CFR 110)

1. If any of the following criteria are met the Responsible Person shall notify the National Response Center (NRC) **within two (2) hours** of the spill discovery by calling 800-424-8802 or 202-426-2675.

    - ❖ The spill has caused a film, sheen, or discoloration of the surface water or shorelines;
    - ❖ The material spilled will violate applicable water quality standards (surface water or groundwater); or
    - ❖ The spill has caused a sludge or emulsion to be deposited beneath the surface of the water or on the shoreline.

2. At a minimum, the following information shall be provided to the NRC:

    a) Name, organization, and telephone number of reporting party;
    b) Name and address of the responsible party;
    c) Date, time, and location of the incident;
    d) Source and cause of the discharge;
    e) Type of material(s) discharged;
    f) Quantity of materials discharged;
    g) Danger or threat posed by discharge;
    h) Number and types of injuries (if any);
    i) Weather conditions at the incident location; and
    j) Other information to help emergency personnel respond to the incident.

3. If unable to report to the NRC, reports can be made to the EPA Regional Office at 800-438-2474 or the U.S. Coast Guard (USCG) at 202-372-1001. The NRC, EPA, or USCG will provide further guidance.

4. A digital record of the NRC notification and any accompanying documentation shall be retained on-site.

Federal Reporting Requirements - EPA Regional Administrator (40 CFR 112.4)

1. If the facility where the spill occurred is regulated under 40 CFR 112 and is required to have a Spill Prevention, Control, and Countermeasures (SPCC) Plan, the Responsible Person shall report the spill to the EPA Region III Administrator when any of the following criteria are met:

   - ❖ More than 1,000 gallons of oil is discharged to navigable waters or adjoining shorelines in a single incident; or
   - ❖ More than 42 gallons of oil is discharged to navigable waters or adjoining shorelines in each of two incidents occurring within any twelve-month period.

2. The report shall be made in writing **within 60 days** of the spill and shall contain:

   a) Name and location of the facility;
   b) Owner/operator name;
   c) Maximum storage/handling capacity of the facility and normal daily throughput;
   d) Corrective actions and countermeasures taken;
   e) Adequate description of the facility including maps, and flow diagrams;
   f) Cause of the discharge to navigable waters, including a failure analysis;
   g) Additional preventative measures taken or planned to minimize discharge reoccurrence; and
   h) Other information required by the EPA Regional III Administrator.

3. The report shall be submitted to the EPA Regional Administrator at the following address:

   EPA Regional Administrator
   US EPA Region 3
   1650 Arch Street (3RA00)
   Philadelphia, PA 19103-2029

4. A copy of the report shall be retained in the facility SPCC Plan.

Appendix D

Training Records

GOOD HOUSEKEEPING PLAN (GHP)
TRAINING ATTENDANCE LOG

FACILITY NAME: _____

DATE	NAME *(PRINT)*	SIGNATURE

By signing I affirm that I have completed the required annual training; and I am aware of and understand my responsibilities under this Plan.

GOOD HOUSEKEEPING PLAN (GHP)

Scarboro Hills Disc Golf Course
3128 Sandy Hook Road
Street, MD 21154

June 30, 2025

TABLE OF CONTENTS

1.0 BACKGROUND & INTRODUCTION 1
1.1 Objectives 1
1.2 Potential Stormwater Pollutants 1
2.0 RESPONSIBILITIES 3
2.1 GHP Implementation 3
2.2 Plan Review and Modification 3
2.3 Inspections 3
2.3.1 GHP Site Inspections 3
2.3.2 Conveyance System Inspections 4
2.4 Training 4
3.0 BEST MANAGEMENT PRACTICES (BMPs) 5
3.1 Applicability of BMP Fact Sheets 5
3.2 BMP Fact Sheets 5

List of Tables

TABLE 1-1 POTENTIAL STORMWATER POLLUTANTS AND THEIR SOURCES 2

List of BMP Fact Sheets

GH-01 - Waste Management
GH-02 - Vehicle and Equipment Storage
GH-03 - Vehicle/Equipment Refueling
GH-04 - Vehicle Maintenance
GH-05 - Vehicle/Equipment Washing
GH-06 - Material Storage
GH-07 - Aboveground Storage Tanks
GH-08 - Resident Drop-Off Centers
GH-09 - Stockpiles
GH-10 - Deicing Materials

Appendices

Appendix A: GHP Site Inspection Checklist
Appendix B: GHP Stormwater Conveyance Inspection Checklist
Appendix C: General Spill Response Procedures
Appendix D: Training Records

List of Acronyms

AST	-	Aboveground Storage Tank
BMP	-	Best Management Practice
CFR	-	Code of Federal Regulations
GHP	-	Good Housekeeping Plan
MDE	-	Maryland Department of the Environment
MS4	-	Municipal Separate Storm Sewer System
NPDES	-	National Pollutant Discharge Elimination System
SPCC	-	Spill Prevention, Control, and Countermeasure Plan

1.0 BACKGROUND & INTRODUCTION

Polluted stormwater runoff has the potential to enter the County's storm sewer systems (referred to as a municipal separate storm sewer system or MS4), and then discharge, untreated, into local water bodies. To address this potential stormwater pollution, the County is required to obtain a NPDES permit from the Maryland Department of the Environment (MDE). The NPDES Permit requires the County to take actions to prevent stormwater pollution, maintain storm sewer systems, monitor stormwater discharges, and develop and implement comprehensive management programs to minimize the discharge of pollutants from the storm sewer system.

To comply with Part IV.D.4.b of the County's Phase I MS4 Permit, the County must develop, implement, and maintain a Good Housekeeping Plan (GHP) for certain County-owned properties not required to be covered under Maryland's General Permit for Discharges from Stormwater Associated with Industrial Activities *(General Permit 12-SWA / 20-SW).*

To support this effort, a *"Good Housekeeping Plan Applicability Certification"* has been developed to evaluate and document if a specific County-owned facility is subject to the GHP requirements. The *"GHP Applicability Certification"* includes the following ten (10) potential stormwater polluting activities. If any of the covered activities are performed at the facility, then that facility is required to implement a site-specific GHP. The GHP will include each of the potential stormwater polluting activities identified in the *"GHP Applicability Certification"* and corresponding pollution prevention procedures.

- Waste Management
- Vehicle and Equipment Storage
- Vehicle/Equipment Refueling
- Vehicle Maintenance
- Vehicle/Equipment Washing
- Material Storage
- Aboveground Storage Tanks
- Resident Drop-Off Center
- Stockpiles
- Deicing Materials

1.1 Objectives

The GHP was developed to outline suitable practices, procedures, and protocols, or Best Management Practices ("BMPs") for reducing and/or preventing stormwater pollution associated with operations at covered County-owned properties. The intent of the pollution prevention procedures included in the GHP is to limit the release of materials with the potential to impact stormwater, this includes reducing or eliminating (to the extent practical):

- The occurrence of spills and leaks;
- The accidental dumping or release of materials;
- The accumulation of waste, trash, debris, unused parts/equipment, etc.;
- The exposure of hazardous materials to precipitation/run-off;
- Stormwater run-off contamination by improperly stored materials; and/or
- Illicit discharges to the storm drain system.

1.2 Potential Stormwater Pollutants

Table 1-1 on the following page provides a list of common potential pollutants that may result from the GHP-regulated activities identified above. Understanding the sources of these pollutants can help in achieving the goals and objectives of the GHP program.

TABLE 1-1 POTENTIAL STORMWATER POLLUTANTS AND THEIR SOURCES

		Waste Management	Vehicle/Equipment Storage	Vehicle/Equipment Refueling	Vehicle Maintenance	Vehicle/Equipment Washing	Material Storage	Aboveground Storage Tanks	Resident Drop-Off Center	Stockpiles	Deicing Materials
Pollutants	**Sources**	**Associated GHP Activity**									
Sediment	Land disturbance; erosion; paved surfaces; material stockpiles; waste storage; salt/abrasive application	X				X	X		X	X	X
Hydrocarbons *(petroleum compounds)*	Leaking vehicle and equipment; vehicle and equipment cleaning; spills; improper storage; maintenance activities; scrap metal disposal; improper disposal	X	X	X	X	X	X	X	X		
Metals	Vehicle brake and tire wear; vehicle/equipment exhaust; batteries; galvanized metal; paint and wood preservatives; fuels, pesticides, and cleaners; vehicle fueling, maintenance, and washing; industrial waste	X	X	X	X	X	X	X	X		
Toxic Chemicals	Pesticide application; improper chemical storage; leaks and spills from storage containers; leaking vehicles; maintenance activities	X	X		X	X	X	X	X		
Chlorides	De-Icing chemicals										X
Trash/Debris	Improper waste storage and disposal; leaking trash containers; littering; poor housekeeping	X	X				X		X		
Nutrients (nitrogen and Phosphorus)	Fertilizers; malfunctioning septic systems; sewer overflows; animal/pet waste; vehicle washing; decaying grass and leaves; leaking trash containers; atmospheric deposition	X				X	X		X		

2.0 RESPONSIBILITIES

2.1 GHP Implementation

A separate GHP is required for each covered facility. The following individual *(identified by name and/or title)* is accountable for the administration and implementation of the GHP at this facility and has the authority to commit the necessary resources to implement this Plan.

_____

Name and/or Title of Responsible Person

The Responsible Person listed above shall ensure that facility personnel involved in any GHP-covered activities identified in this Plan, are provided with access to, and are familiar with, the contents of this Plan.

2.2 Plan Review and Modification

The *"GHP Applicability Certification"* completed for this facility must be reviewed and updated once every permit term, or within one (1) year of substantial changes to a facility's operations that could reasonably contribute to stormwater pollution. Any newly constructed/acquired facility must be assessed within one (1) year of initiating operations at the facility. The facility's GHP must be amended and reissued to the facility within one (1) year of any changes to the facility's *"GHP Applicability Certification"*.

When warranted, the BMP Fact Sheets provided in Section 3.0 may need to be updated or revised. At the same time, additional BMP Facts Sheets may be added. The need for such updates or modifications will be at the discretion of the County's GHP Program Administrator.

2.3 Inspections

The County's MS4 permit requires each facility covered by a GHP to have the following:

1. Written procedures for annually assessing County properties to prevent the discharge of pollutants, spills, and leaks into the County's storm sewer system; and

2. Written procedure for performing stormwater conveyance system inspections and for removing debris that may cause clogging, backups, and flooding.

To meet these requirements, each facility that is covered by a GHP will be required to complete routine site inspections and stormwater conveyance system inspections as detailed below. Facility management will be responsible for ensuring the necessary inspections are completed within the required timeframes, that corrective actions (if needed) are performed, and that records of inspections and completed corrective actions are maintained for at least five (5) years.

2.3.1 GHP Site Inspections

The GHP Site Inspection will be performed to ensure that each GHP-covered facility is being properly maintained and that there are no visible signs of pollutants entering the stormwater system. GHP facilities shall utilize the *"GHP Site Inspection Checklist"*, provided in ***Appendix A*** to complete the required inspection. At a minimum, each facility is to be inspected every five (5) years.

2.3.2 Conveyance System Inspections

Stormwater conveyance systems are generally comprised of curbs and gutters, catch basins, inlet structures, swales, channels, piping, culverts, detention ponds, outfalls, or other structures that are used to collect, contain, and convey stormwater runoff.

The unimpeded movement of stormwater through conveyance systems is critical in avoiding backups and flooding, which can impede facility operations and damage property. Routine inspections and preventative care of stormwater conveyance systems can ensure these systems function as intended and prevent the need for costly and time-consuming repairs and retrofits.

Each GHP-covered facility is required to conduct routine stormwater conveyance system inspections to ensure the free flow of stormwater within the conveyance systems. GHP-covered facilities shall utilize the *"GHP Stormwater Conveyance System Inspection Checklist"*, provided in ***Appendix B*** to complete the required inspections. At a minimum, facility conveyance system inspections are to be conducted every five (5) years.

2.4 Training

As part of the GHP requirements within the County's Phase I NPDES permit, annual training must be provided to all appropriate staff and contractors. Such training shall be provided to any individuals responsible for implementing the GHP, performing the required inspections, or involved in any of the GHP-covered activities identified in this Plan. The required training shall focus on the duties and responsibilities assigned to site personnel in implementing the GHP and the best management practices (BMPs) prescribed in this Plan for preventing, reducing, and eliminating the discharge of pollutants during facility activities.

The County's MS4/GHP Program Coordinator will be responsible for developing the required training and disseminating it to GHP-covered facilities. Each GHP-covered facility will be responsible for identifying staff/contractors who must attend annual training, ensuring identified staff complete the required training, and maintaining records that document training dates and attendees. Training records and other documentation shall be maintained in ***Appendix D*** of this Plan.

3.0 BEST MANAGEMENT PRACTICES (BMPs)

This section contains a BMP Fact Sheet for each of the ten (10) GHP-regulated activities. The County's operations are not limited to the BMPs contained within this document; nor is the County required to implement all of the pollution prevention measures identified within each BMP Fact Sheet. The County should select and implement those measures that are applicable and have the greatest potential for reducing stormwater pollution.

The BMP Fact Sheets contained within this document offer recommended protocols for a particular activity. These pollution prevention measures are considered non-structural BMPs with a focus on source control of potential pollutants.

3.1 Applicability of BMP Fact Sheets

The *"GHP Applicability Certification"* completed for this facility has identified the activities conducted at this facility that require coverage under this Plan. Each of the BMP Fact Sheets shall be marked as to whether they are applicable or not applicable to this facility. The Applicable/Not Applicable indicator on each BMP Fact Sheet can be revised in response to changes in operations at the facility.

3.2 BMP Fact Sheets

BMP Fact Sheets can be found on the following pages. For the sake of consistency, the general outline of a BMP Fact Sheet will be as follows:

- Identification of GHP-covered activity.
- Applicability of the BMP Fact Sheet to the facility.
- A general description of the concern the activity poses to stormwater.
- Recommended pollution prevention measures for reducing/eliminating stormwater pollution.
- Additional sources of information, if applicable.

WASTE MANAGEMENT

Not Applicable ☒ Applicable ☐

CONCERN

Improperly managed waste can allow trash and debris to be washed into storm drains which poses a concern to water quality, marine life, and public health. It also has the potential to create obstructions in the drainage system, which can lead to backups and flooding. Additionally, improper storage and handling of waste materials can allow pollutants including oils and greases, toxic and chemical compounds (including nutrients), bacteria, metals, and other potentially hazardous wastes to enter waterways.

POLLUTION PREVENTION MEASURES

General *(applicable to all waste management activities)*

1) Provide suitable containers, preferably with working covers, to collect waste materials.
2) Ensure that appropriate waste containers are available in areas where waste is generated.
3) Provide a cover over waste storage areas, if feasible.
4) Avoid positioning waste receptacles near storm drains, water bodies, or areas of concentrated runoff.
5) Ensure that lids to waste containers *(if present)* are kept closed to prevent the intrusion of precipitation and prevent trash from blowing out of the receptacle.
6) For waste receptacles, which do not have lids and could leak, containers should be inspected regularly and controls (e.g., containment, spill response, etc.) shall be enacted whenever leaks or dry-weather discharges are observed.
7) Routinely inspect waste containers, roll-offs, compactors, and other waste receptacles for the presence of excessive waste accumulation and overflowing containers.
8) Ensure that wastes accumulating on the ground are placed in a suitable waste container.
9) Ensure that wastes are removed from the facility regularly by a licensed and contracted vendor.
10) Repair or replace damaged waste container lids.

Trash Compactors

1) Routinely inspect trash compactors for malfunctioning equipment or leaking hydraulic oil and provide the appropriate spill response if leaking equipment is encountered.
2) Regularly inspect compactors for leaking fluids and implement appropriate controls such as spill response/cleanup, collection or diversion of released fluids, providing secondary containment, etc. whenever leaks or dry-weather discharges are observed.

Scrap Metal Collection Containers

1) Avoid placing oily or grease-covered items in uncovered scrap metal recycling collection containers. If needed, wrap oily/greasy items in plastic garbage bags before placing them in the collection container.

Hazardous/Universal Wastes

1) Ensure that hazardous waste and universal wastes (e.g., batteries, bulbs, etc.) are collected and stored indoors or within covered collection containers.
2) Verify that hazardous/universal waste collection containers are in good condition, not leaking, and compatible with the wastes being stored.

Street Sweeping / Vactor Truck Material Storage

1) Do not site storage areas near storm drains, open water bodies, or areas of concentrated runoff.
2) Install sediment control devices (e.g. silt fence, silt socks, hay bales, etc.) around the staging area. Inspect these controls regularly and replace them as needed.
3) Cover the materials staging area, if feasible.
4) Provide oil-absorbent booms if necessary to control oily discharge. Inspect and replace booms regularly.
5) The staging area should be checked periodically for evidence of sediment migrating outside of the staging area. Material that has migrated out of the staging area should be promptly swept and returned to the staging area or disposed of.

Waste Cooking Oil/Grease

1) Maintain storage containers indoors or within a covered location, if feasible.
2) Storage containers shall be secured to prevent infiltration of precipitation and accidental/intentional spills or releases.
3) Carefully transfer waste oil/grease to the appropriate collection container to avoid spills.
4) Maintain suitable spill response equipment near collection containers. Immediately clean up any spilled oil/grease. Keep the exterior of the collection container clean and free of spilled oil/grease.
5) Provide secondary containment for collection containers, if feasible.

VEHICLE AND EQUIPMENT STORAGE

Not Applicable ☒ Applicable ☐

CONCERN

Vehicles and equipment may be stored onsite to support various County operations (e.g., construction, maintenance, snow removal, roadside assistance, mass transit, mowing, etc.). Examples of County owned and operated vehicles and equipment stored onsite at any given time include but are not limited to, the following: cars, trucks, buses, emergency response vehicles, garbage trucks, heavy equipment (backhoes, frontend loaders, etc.), forklifts, towable generators, portable light stands, and roadside equipment. Vehicle and equipment storage is considered a pollutant source due to the potential for incidental releases of petroleum products, lubricants, and various automotive fluids.

POLLUTION PREVENTION MEASURES

1) When possible/practical, store vehicles and equipment inside or under cover to prevent exposure to precipitation.
2) If vehicles or equipment must be stored outside, store vehicles/equipment in designated areas away from areas of concentrated runoff, storm drains, and other stormwater conveyances.
3) Vehicles and equipment shall be staged on impervious (asphalt or concrete) surfaces;
4) Keep truck beds clean and ensure potential stormwater pollutants are stored in closed containers, covered, or otherwise protected from stormwater exposure.
5) Conduct routine visual inspections of vehicles and equipment for the presence of leaks and respond accordingly.
6) Leaking vehicles/equipment should be moved inside or under cover. At a minimum, drip pans or absorbent pads shall be used to contain the leak until the vehicle/equipment can be relocated and the leak addressed.
7) Drain all fluids from wrecked or heavily damaged vehicles and equipment before storage.
8) Have an adequate supply of appropriate spill response equipment readily available and clean up all spills and leaks immediately utilizing dry cleaning techniques (e.g. absorbents and brooms).
9) Train staff in spill response so that incidents are addressed in a timely fashion.
10) Do not wash down areas where leaks have collected on ground surfaces; use dry cleaning methods such as granular absorbents and brooms.

VEHICLE AND EQUIPMENT REFUELING

Not Applicable ☒ Applicable ☐

CONCERN

Refueling activities associated with County vehicles and equipment can result in a discharge of fuel (gasoline and diesel fuel), which has the potential to enter the storm drain system and/or a nearby waterway. Such releases can introduce hydrocarbons, metals, and other toxic chemicals to stormwater runoff.

POLLUTION PREVENTION MEASURES

General Procedures *(applicable to all refueling activities)*

1) Routinely *(at least daily)* inspect the fuel dispensing area for any spills or leaks.
2) Routinely inspect fuel dispensing equipment looking for leaking or damaged equipment. Damaged or malfunctioning equipment shall be taken out of service until it has been repaired.
3) Fuels will only be dispensed into authorized vehicles, equipment, and approved containers.
4) Vehicle operators must remain outside of their vehicles and in attendance of fuel dispensers at all times while dispensing fuel.
5) Third-party contractors must be trained in proper refueling procedures and pollution prevention.
6) Do not utilize a foreign object to keep the dispenser nozzle in the open position. If present, a “hold-open” latch on the nozzle may be used.
7) Do not “top off” a vehicle’s fuel tank once the dispenser nozzle’s automatic shut-off has been activated. Topping off tanks may result in spills. Post signs in fueling areas warning vehicle operators against "topping off" of vehicle fuel tanks.
8) After refueling has stopped, allow several seconds to pass before removing the nozzle and returning it to the dispenser. This will prevent incidental dripping from the nozzle.
9) Employees refueling vehicles shall note the location of the “Emergency Fuel Shut Off” switch, to be used to stop the flow of fuel to the dispensers in the event of a release or emergency.
10) Have an adequate supply of appropriate spill response equipment readily available and clean up all spills immediately utilizing dry cleaning techniques (e.g. absorbents and brooms).
11) Immediately clean up and dispose of used absorbent material.
12) Do not wash down fueling areas; use dry cleaning methods such as granular absorbents and brooms.
13) Conduct refueling activities over impervious (e.g. concrete) surfaces. Place drip pans or absorbent pads under the nozzle if fueling occurs over a permeable surface such as grass or soil.
14) Install oil control devices in storm drains that may receive contaminated runoff from fueling areas.
15) Cover fueling areas with a canopy or roof to prevent direct contact with rainfall. Direct run-on away from fueling areas and collect fueling area run-off in a dead-end sump or oil-water separator.

Mobile Equipment Refueling

1) Refuel equipment on an impervious surface, downgradient of, and at the farthest practical distance from any storm drain, stormwater conveyance, stormwater management feature, or waterway.
2) Utilize secondary containment when refueling equipment (when practical).
3) Ensure mobile refuelers are parked in designated locations and away from areas of concentrated run-off, storm drains, and other stormwater conveyances.
4) Ensure that procedures are in place and that staff is properly trained in spill response/cleanup so that leaks and spills are addressed appropriately and promptly.

VEHICLE MAINTENANCE

GH-04

Not Applicable ☒ Applicable ☐

CONCERN

Vehicle and equipment maintenance can impact the water quality of nearby waterways by exposing stormwater to various pollutants including petroleum hydrocarbons, solvents, antifreeze/coolants, used oil, lubricating oil, grease, brake fluid, metals, and various chemicals. Additionally, vehicles that are wrecked or awaiting repair can be a source of pollution if leaking fluids are not properly controlled.

POLLUTION PREVENTION MEASURES

1) Conduct vehicle and equipment maintenance activities indoors.
2) Make sure incoming vehicles and equipment are inspected for leaking fluids and oil.
3) Move leaking vehicles or equipment indoors or under cover as soon as possible. At a minimum, a drip pan or absorbent pads shall be utilized to contain the leak until the vehicle/equipment can be relocated and the leak addressed.
4) Avoid performing maintenance on vehicles in close proximity to exterior doorways, which may allow released fluids to migrate outdoors.
5) Have an adequate supply of appropriate spill response equipment readily available and clean up all spills and leaks immediately utilizing dry cleaning techniques (e.g. absorbents and brooms).
6) Keep maintenance areas neat and well organized. Remove dirt, debris, and used absorbent regularly.
7) Inspect maintenance areas as well as maintenance equipment on a routine basis.
8) Store vehicles, parts, and generated wastes indoors or off the ground and under cover whenever possible. When practical, provide secondary containment.
9) Promptly transfer used fluids to the proper waste container; do not leave full drip pans or other open containers around the shop. Empty and clean drip pans and containers regularly.
10) Waste liquids shall not be poured into floor drains, sinks, outdoor storm drain inlets, or other storm drains or sewer connections. Liquid wastes are to be collected in properly labeled containers and disposed of by a licensed waste hauler or other appropriate method.
11) Store leaking batteries in a sealed container and provide secondary containment, if feasible.
12) Clean all parts indoors utilizing a self-contained parts washer.
13) Do not hose down indoor service areas to storm drains or areas where it can seep into groundwater.
14) Maintain floor drains in good working order and inspect for proper function on a routine basis. Consider plugging floor drains that discharge to the storm sewer.
15) Ensure oil/water separators (if present) are maintained in proper working order and are checked on a routine basis for the presence of oil.
16) If maintenance work must be performed outdoors, adhere to the following requirements:
    - Conduct maintenance activities over an impervious surface, away from stormwater inlets.
    - Cover outdoor maintenance areas and direct stormwater run-on away from the area.
    - Use drip pans or drop cloths underneath the equipment to catch leaks and drips.
    - Have an adequate supply of appropriate spill response equipment readily available.
    - Clean all spills immediately using dry cleaning techniques (e.g. absorbents and brooms).
    - Avoid performing maintenance activities during precipitation events.
    - Limit temporary outdoor maintenance activities to a single shift/day if additional time is needed to cover the work area at the end of each day/shift.

BMP Fact Sheet

VEHICLE AND EQUIPMENT WASHING

GH-05

Not Applicable ☒ Applicable ☐

CONCERN

Vehicle and equipment washing can generate washwater that contains oil, grease, organic compounds, surfactants, phosphates, metals, and suspended solids. If vehicles/equipment are washed outdoors on impervious surfaces, dirty washwater can contaminate stormwater that ends up in waterways. Washing equipment over pervious surfaces can allow washwater to seep into the ground contaminating groundwater.

POLLUTION PREVENTION MEASURES

1) Vehicle and equipment washing should only be conducted in designated indoor wash bays that capture and recycle washwater to the extent practical.
2) Wastewater from the washing facility should be discharged to the sanitary sewer system under the authorization of a wastewater discharge permit issued by the local municipal authority.
3) The floor of indoor vehicle wash bays should be completely bermed or sloped to collect wash water and prevent migration outdoors.
4) No other activities (e.g., fluid changes, repairs, material storage) shall be performed in wash areas.
5) Keep the wash bay neat and well organized. Sweep or pick up all trash and debris daily or as needed.
6) Solid materials accumulated on vehicles or in vehicle beds (e.g. salt, soil, grass, etc.) shall be knocked off or otherwise removed from the vehicle (while inside the wash bay) prior to washing. Solid materials shall be collected and disposed of properly.
7) For vehicles too large to completely fit in the wash bays, only the portion of the vehicle physically located in the confines of the wash bay shall be cleaned. The vehicle shall then be rotated to allow for the remaining portion of the vehicle to be washed.
8) Use nozzles that automatically turn off water when not in use and consider high-pressure, low-volume sprays.
9) Avoid detergents as much as possible. If detergents are necessary, use a biodegradable, phosphate-free detergent.
10) If discharging to an oil-water separator, use a non-emulsifying detergent.
11) Inspect floor drain systems, holding tanks, and conveyances associated with designated wash areas regularly. Maintain oil/water separators and/or process flowthrough separators on a routine basis.
12) Use commercial car washes when vehicle or equipment washing cannot be performed onsite without causing impacts to stormwater.
13) If washing must occur onsite and outdoors, use a designated impervious area that is marked with posted signs indicating proper washing procedures. This area must be bermed to contain the wash water and graded to direct the wash water to the sanitary sewer, an oil-water separator, a holding tank, a dead-end sump, or other containment area. Captured water shall be disposed of properly.
14) Avoid steam cleaning and engine/undercarriage washing which can produce high pollutant concentrations. If steam cleaning or engine washing is necessary, perform such cleanings within isolated indoor areas, and ensure wash water is treated and discharged to the sanitary sewer (if permitted to do so) or captured for off-site disposal.
15) Train staff in proper washing techniques and how to confine washing to designated wash areas.
16) Consider alternatives to washing such as using air to blow grass and debris from small equipment, wet-wiping equipment with rags, etc.

BMP Fact Sheet

MATERIAL STORAGE

GH-06

Not Applicable ☒ Applicable ☐

CONCERN

The storage of petroleum products, chemicals, paints, cleaners, pesticides, fertilizers, bags of erodible materials like sand, cement, and soil, and other potential pollutants can negatively impact surface waters through the accidental releases or leaching of materials into stormwater. Unprotected outdoor storage areas can generate a wide range of stormwater pollutants, such as sediment, nutrients, toxic materials, and petroleum products.

POLLUTION PREVENTION MEASURES

1) Whenever possible, store containers (e.g. drums, bins, bags, cans, and totes) indoors or under cover to limit exposure to stormwater.
2) Designate specific areas for material delivery and storage that are away from heavy traffic areas, storm drains, stormwater conveyances, and areas of concentrated run-off.
3) Designated outdoor storage areas should be paved or consist of an impervious surface.
4) Provide secondary containment for materials whenever possible or required per regulation.
5) Store materials on pallets to prevent stormwater run-on from coming into contact with materials, prevent container corrosion, and allow for better leak detection. Pallets must be in good condition and promptly replaced once damaged or deteriorated.
6) Stack containers according to the manufacturer's recommendations to avoid damage.
7) Immediately replace damaged, corroded, or leaking containers.
8) Ensure all storage containers are clearly labeled with their contents.
9) Keep containers tightly sealed after use.
10) Maintain an accurate inventory of hazardous substances and limit on-site storage to that which is necessary to support facility operations.
11) Keep storage areas neat and well organized; remove debris and unneeded material promptly.
12) If empty drums are stored outdoors, ensure that all openings are equipped with caps to prevent water intrusion and that the drum/storage area is labeled "Empty Drums".
13) Have an adequate supply of appropriate spill response equipment readily available and clean up all spills and releases immediately utilizing dry cleaning techniques (e.g. sweeping/absorbents).
14) Clean up all migrating dry materials upon discovery and address the source of the release.
15) Provide perimeter controls (e.g., berms, rock check dams, etc.) for erodible stockpiles of materials such as mulch, sand, and gravel to prevent migration into the stormwater system.
16) Routinely inspect material storage areas for leaks, material migration, and damaged or corroded containers. Ensure that secondary containment and other perimeter controls are in satisfactory condition.
17) Additional visual inspections of outdoor storage areas should be conducted after significant rainfall events (i.e., greater than 0.5 inches).

BMP Fact Sheet

ABOVEGROUND STORAGE TANKS

GH-07

Not Applicable ☒ Applicable ☐

CONCERN

Aboveground storage tanks (ASTs) may be used to store fuels, automotive fluids, chemicals, or deicing fluids. Leaks from tanks, piping, or other equipment and releases during fluid transfers can all impact stormwater quality. It is critical to maintain ASTs in good working condition to prevent spills and/or releases from occurring. Improperly managed storage tanks can cause significant environmental impacts.

POLLUTION PREVENTION MEASURES

General *(applicable to all storage tanks)*

1) ASTs should be installed and maintained in accordance with COMAR 26.10 and applicable fire codes.
2) ASTs should be provided with secondary containment, whenever feasible or required by regulation.
3) Secondary containment areas shall be maintained clean and dry; drain valves must be kept closed; accumulated liquid shall only be discharged if there are no visible signs of impacts, and in accordance with applicable regulations.
4) Inspect ASTs monthly to identify any leaking or malfunctioning equipment and ensure tanks are functioning as designed.
5) ASTs shall be equipped with a form of liquid-level detection (i.e. sight gauge, electronic monitoring).
6) ASTs shall be equipped with overfill prevention (i.e. overfill alarm and/or overfill prevention valve).
7) Tanks and piping should be protected from vehicle impact via barriers, bollards, guard rails, etc.
8) Install ASTs on solid foundations over impervious surfaces, and away from areas of concentrated run-off, storm drains, and other stormwater conveyances.
9) Properly label all storage tanks (e.g., contents, capacity, etc.).
10) Keep remote fills and fill port spill buckets clean and dry.
11) Keep fill ports, gates, and tank areas secured when not in use to prevent fuel theft and tampering.
12) Have an adequate supply of appropriate spill response equipment readily available and clean up all spills and leaks immediately utilizing dry cleaning techniques (e.g. absorbents and brooms).
13) Facilities that maintain 1,320 gallons or more of aboveground oil products shall prepare and implement a Spill Prevention, Control, and Countermeasure (SPCC) Plan, per 40 CFR 112.
14) Facilities that maintain 1,000 gallons or more of used oil or 10,000 gallons or more of virgin oil in ASTs shall obtain an Individual Oil Operations Permit from the MDE, per COMAR 26.10.01.09.
15) Owners/Operators of facilities that maintain more than 2,500 gallons of oil in ASTs are required to register each AST with MDE, per COMAR 26.10.01.10.

Bulk Fluid Transfers (Deliveries)

1) All bulk fluid transfer operations shall be performed under the direct supervision of knowledgeable County personnel. At no time shall the delivery vehicle or delivery vehicle operator be unsupervised.
2) The product level within the tank must be measured and available capacity verified before delivery.
3) Deliveries shall be made via fill ports equipped with catch basins to capture drips and spills.
4) Ensure an adequate supply of appropriate spill response equipment is readily available.
5) Post signs in delivery area displaying proper delivery procedures and emergency contact information.

ABOVEGROUND STORAGE TANKS

Used Oil Tanks

1) County personnel must verify the level of product in used oil tanks prior to filling.
2) Used oil tanks should only be filled via designated fill ports. Pumping used oil into the tank via a closed piping system is preferred to manually pouring used oil into the tank.

Brine Tanks

1) If multiple tanks are located onsite, the tanks should be plumbed to ensure that the complete failure of one tank will not drain all the tanks in the system (tanks must be isolated).
2) Minimize seeping and leaking at fittings by properly supporting piping and fittings, using flexible connectors or hoses to reduce stress, and installing corrosion-resistant fittings.
3) Consider placing hoses in non-permeable trenches or using drip-less nozzles to reduce repeated small spills.

RESIDENT DROP-OFF CENTER

Not Applicable ☒ Applicable ☐

CONCERN

Resident Drop-Off Centers are publicly accessible facilities where residents can drop off used automotive fluids (i.e. oil or antifreeze), municipal waste, recyclable, and/or organic waste, typically free of charge. Improper transfer or management of the waste materials can allow a number of pollutants including oils and greases, toxic and chemical compounds, nutrients, metals, and other wastes to enter waterways.

POLLUTION PREVENTION MEASURES

General *(applicable to all materials collected)*

1) Clearly identify waste materials accepted by the facility, and clearly mark designated collection areas.
2) Waste material should be inspected by a County representative, prior to disposal.
3) Avoid positioning waste receptacles near storm drains, water bodies, or areas of concentrated runoff.
4) When practical, receiving areas should be covered.
5) Do not allow containers to overflow or waste materials to accumulate on the ground.

Automotive Fluid Collection

1) Used oil, antifreeze, and automotive fluid receiving areas should be on impervious surfaces, covered, and provided with secondary containment, which shall be maintained clean and dry.
2) Provide lidded waste receptacles in the receiving area for the public to dispose of empty containers. Waste receptacles shall be emptied routinely and waste disposed of properly.
3) Collection areas shall be inspected daily and all trash and spilled liquids appropriately cleaned up.
4) The available capacity of waste liquid collection containers shall be routinely verified and waste removals scheduled, as needed.
5) Install appropriate controls to prohibit the overfilling of waste fluid collection containers.
6) Place appropriate spill response equipment in close proximity to drop-off areas.
7) If aboveground tanks are used to collect waste fluids, refer to BMP Fact Sheet GHP-07 (Aboveground Storage Tanks) for additional recommendations.

Organic Debris Collection

1) Routinely transfer collected organic debris/waste to a composting or disposal facility.
2) Do not permit composting of organic waste except at properly designed and permitted facilities.
3) Enact controls to prevent leaves and other windblown debris from entering stormwater inlets.

Municipal Waste / Recyclables Collection

1) Refer to BMP Fact Sheet GHP-01 (Waste Management) for additional recommendations.

STOCKPILES

GH-09

Not Applicable ☐ Applicable ☒

CONCERN

The County may stockpile various erodible materials, the type of material can vary depending on the needs of the County. Stockpiled material may include soil, sand, millings, slag, cinders, sawdust, landscaping bark, compost, etc. Exposed stockpiles can easily erode due to wind or precipitation and contribute suspended solids to stormwater runoff.

POLLUTION PREVENTION MEASURES

1) Maintain stockpiles of erodible materials within roofed storage buildings or covered storage bins, if feasible. If not, stockpile material on an impervious surface and cover the stockpile.
2) Temporary stockpiles should be placed on an impermeable membrane (tarp) for quick clean-up.
3) Locate stockpiles away from drain inlets, catch basins, swales, areas of concentrated stormwater flow, water bodies, and environmentally sensitive areas.
4) Divert stormwater flows away from/around the stockpiles using a diversion device (e.g., temporary swale, berm, sandbags, or diversion fence).
5) Cover temporary stockpiles of erodible materials with a tarp that has been adequately secured. The covers must be in place at all times when the stockpile is not in active use.
6) When accessing a portion of the stockpile, only remove a section of the cover to minimize exposure to the elements.
7) Use barriers to isolate stockpiled materials from high-traffic areas to prevent tracking of materials.
8) Sweep (do not wash or hose down) in front of material stockpile storage areas at regular intervals, following loading and unloading activities, and during times of heavy use.
9) If material is observed migrating from the stockpile, clean up all migrated material upon discovery and provide additional controls to reduce migration from the stockpile. If such measures are ineffective implement controls to capture pollutants before they migrate off-site (e.g. silt fencing, inlet filters, filter socks, at-grade inlet protection, etc.).
10) Minimize material stockpile inventory based on historical inventory/usage records and public safety operational needs.
11) Cold mix asphalt shall be stored on and covered with plastic sheeting or comparable material.
12) Routinely inspect outdoor material stockpiles to verify existing controls are functioning properly and for signs of erosion or material transport.

BMP Fact Sheet

DEICING MATERIALS

GH-10

Not Applicable ☒ Applicable ☐

CONCERN

When salt and other de-icing materials are stored outside and uncovered, they have a much higher risk of being eroded and transported offsite by stormwater. Improper de-icing material and sand storage may result in stormwater runoff containing elevated concentrations of sodium chloride and dissolved solids. Sodium chloride (e.g., road salt) is an effective deicer but can be highly corrosive to stormwater facilities. Smaller waterways are at a higher risk to increases in salinity, which can threaten aquatic species. Additionally, runoff containing sodium chloride has the potential to reach drinking water sources where small traces can adversely impact public health.

POLLUTION PREVENTION MEASURES

1) Bagged de-icing chemicals must be stored indoors. If stored outdoors bags must be kept on pallets (off the ground) and covered at all times. Bags must be intact without holes or openings.
2) Bulk de-icing materials shall be stored under cover and on an impervious surface.
3) Bulk salt storage areas/buildings shall not be overfilled so that salt spills out beyond the entrance of the storage area/building.
4) Bulk salt storage areas/buildings shall be maintained in a structurally sound condition and in a way that prevents the release of salt and the infiltration of stormwater. Deicing materials should not touch the sides of metal storage containers.
5) Barriers such as berms, gates, knee walls, tarps, and/or straw bales shall be placed at the entrances of bulk salt storage areas/buildings to prohibit the migration of salt and prevent contact with precipitation/stormwater runoff.
6) Routinely inspect storage areas for migrating materials or deterioration of containment structures. Sweep up all migrating materials upon discovery and repair the source of the migrating pollutant.
7) Loading areas should be constructed of impervious material and covered or enclosed, to the extent practical, to reduce potential contact with stormwater.
8) Minimize the distance de-icing materials are transported during loading/unloading activities.
9) Prevent and/or minimize the spillage of salt and de-icing materials during loading/unloading activities, immediately clean spilled or tracked materials.
10) Sweeping of storage and loading/unloading areas shall be conducted immediately following loading/unloading activities.
11) Do not store de-icing materials (bulk or bagged) over or immediately adjacent to drains or waterways.
12) Control site drainage by diverting stormwater run-on away from storage/loading areas using appropriate measures (e.g., curbing, berms, etc.).
13) Slope storage/loading areas to direct salt-contaminated runoff to an appropriate collection area, and in a manner that prevents the runoff from reaching adjacent soil or surface waters.
14) Excess salt shall be removed from salt handling equipment (trucks, spreaders, etc.) following use/prior to storage. All cleaning shall occur on an impervious surface, which is sloped or curbed to contain any washwater and direct it to a collection area for recycling or proper disposal.

Appendix A

GHP Site Inspection Checklist

GOOD HOUSEKEEPING PLAN (GHP)
SITE INSPECTION CHECKLIST

Facility Name: _____ **Inspection Date:** _____

Inspector Name: _____ **Inspector Signature:** _____

- The intent of this inspection is to ensure that the site is being properly maintained and that there are no visible signs of pollutants entering the stormwater system.
- **A shaded status box designates an item in a non-compliant status. Please provide an explanation for all non-compliant items and subsequently document all corrective actions performed.**
- Retain the completed checklists for five (5) years.

Item	Status			CORRECTIVE ACTIONS/COMMENTS *Items which cannot be corrected immediately must be reported to the GHP/NPDES Program Manager*
	Yes	No	N/A	
GENERAL HOUSEKEEPING				
1. Are exterior areas of the facility free of accumulated trash, debris, and unneeded materials?				
2. Are stormwater drains and inlets free from debris, sediment, and evidence of spills/releases?				
3. Is the facility free from signs of erosion?				
4. Are paved surfaces free of accumulated sediment?				
5. Is spill response equipment available in maintenance areas, fueling areas, hazardous material storage areas, and/or other required areas?				
6. Are spill kits and absorbent materials clearly labeled and accessible (i.e. items are not piled on top of or in front of spill kits)?				
7. Are spill kits secured from being stolen or misused?				
8. Is there a labeled container present for the disposal of used spill cleanup material?				

GOOD HOUSEKEEPING PLAN (GHP)
SITE INSPECTION CHECKLIST

Item	Status			CORRECTIVE ACTIONS/COMMENTS *Items which cannot be corrected immediately must be reported to the GHP/NPDES Program Manager*
	Yes	No	N/A	
9. Does spill response equipment (i.e. spill kits, absorbent materials) need to be replenished?				
WASTE MANAGEMENT				
10. Are areas around solid waste containers/roll-offs/compactors free of excessive trash accumulation or overflowing containers?				
11. Are areas around solid waste containers/roll-offs/compactors free of visible evidence (i.e. leaks, staining) of ongoing stormwater pollution?				
12. Are scrap metal containers in good order and free from evidence of leaking oil/grease?				
13. For dumpsters, roll-offs, and other waste receptacles, where leaks are observed, have appropriate controls (e.g. containment, spill response, etc.) been enacted?				
14. Are the lids (if present) to solid waste containers closed?				
15. Is street sweeping/vactor waste being managed appropriately (i.e. no evidence of material migration)?				
16. Is waste cooking grease managed appropriately (i.e. no evidence of spilled material or excessive staining)?				
VEHICLE & EQUIPMENT STORAGE				
17. Are stored vehicles/equipment free from leaks?				
18. If leaks are present, are they being managed appropriately (drip pan or other methods in place to capture released liquids)?				
19. Are storage areas free of visible evidence of chronic leaks/spills (i.e. significant staining)?				

GOOD HOUSEKEEPING PLAN (GHP)
SITE INSPECTION CHECKLIST

Item	Status			CORRECTIVE ACTIONS/COMMENTS *Items which cannot be corrected immediately must be reported to the GHP/NPDES Program Manager*
	Yes	No	N/A	
VEHICLE & EQUIPMENT REFUELING				
20. Are the areas around refueling areas free from evidence of spills or leaks?				
21. Are refueling areas free of used absorbent material that has not been swept/cleaned up?				
22. Do fuel dispensers and hoses appear to be in good working order and well-maintained?				
VEHICLE MAINTENANCE				
23. Is there any indication that vehicle maintenance activities are being conducted outdoors?				
24. Is there any indication that vehicle maintenance activities are contributing to stormwater pollution?				
VEHICLE & EQUIPMENT WASHING				
25. If performed on-site, does all vehicle/equipment washing occur indoors?				
26. Is wash water collected and disposed of properly?				
27. Is there any indication that vehicle/equipment wash water is being released to stormwater conveyances or pervious areas?				
MATERIAL STORAGE				
28. Are all outdoor storage areas free from visible signs of leaks or spilled material?				
29. Are material storage containers in good condition?				

GOOD HOUSEKEEPING PLAN (GHP)
SITE INSPECTION CHECKLIST

Item	Status			CORRECTIVE ACTIONS/COMMENTS *Items which cannot be corrected immediately must be reported to the GHP/NPDES Program Manager*
	Yes	No	N/A	
30. Are drums, totes, and other containers (that are <u>not</u> empty) stored off the ground and covered, or stored indoors?				
31. Are liquid-containing drums/totes located outdoors provided with secondary containment?				
32. Are containers that are located outdoors equipped with closed lids except when material transfers are occurring?				
33. Are materials, which could impact stormwater, stored away from heavy traffic areas, or protected from vehicle collisions?				
34. Are chemical storage containers properly labeled?				
35. If empty drums are stored outside, are all openings equipped with caps to prevent water intrusion?				
ABOVEGROUND STORAGE TANKS				
36. Are all storage tanks, and surrounding areas free from visible signs of leaks or spilled material?				
37. Do storage tanks appear to be in good working order (e.g. free of obvious signs of damage or malfunctioning equipment)?				
38. Are remote fills associated with tanks free of liquid and debris?				
RESIDENT DROP-OFF CENTERS				
39. Are waste collection areas clearly identified?				
40. Are used oil/antifreeze collection tanks, containment structures, and surrounding areas free from visible signs of leaks or spilled material?				

GOOD HOUSEKEEPING PLAN (GHP)
SITE INSPECTION CHECKLIST

Item	Status			CORRECTIVE ACTIONS/COMMENTS *Items which cannot be corrected immediately must be reported to the GHP/NPDES Program Manager*
	Yes	No	N/A	
41. Do used oil/antifreeze collection tanks appear to be in good working order (e.g. free of obvious signs of damage or malfunctioning equipment)?				
42. Are empty used oil/antifreeze containers being collected and disposed of in the trash?				
43. Are areas around waste/recyclables containers free of excessive trash accumulation or overflowing containers?				
44. Are areas around waste/recyclables containers free of visible evidence (i.e. leaks, staining) of ongoing stormwater pollution?				
45. Are organic debris collection areas free of visible evidence of ongoing stormwater pollution (e.g. leaves and debris in stormwater conveyances)?				
STOCKPILES				
46. Are material piles, including salt, soil, sand, and millings isolated (i.e. covered, bermed, etc.) to prevent stormwater run-on and run-off?				
47. Are areas surrounding material piles (e.g. salt, soil, sand, millings, etc.) free of tracked or migrated material?				
DEICING MATERIALS				
48. Are all deicing materials stored indoors or undercover?				
49. Are salt storage structures in good condition (e.g. no evidence of material escaping or stormwater infiltration)?				
50. Is the salt loading area clean?				

GOOD HOUSEKEEPING PLAN (GHP)
SITE INSPECTION CHECKLIST

Item	Status			CORRECTIVE ACTIONS/COMMENTS *Items which cannot be corrected immediately must be reported to the GHP/NPDES Program Manager*
	Yes	No	N/A	
51. If deicing materials are tarped, is the tarp secure and covering the entire pile?				
52. Are bags of salt stored indoors, or off the ground and covered?				

ADDITIONAL COMMENTS:

Appendix B

GHP Stormwater Conveyance System Inspection Checklist

GOOD HOUSEKEEPING PLAN (GHP)
STORMWATER CONVEYANCE SYSTEM INSPECTION CHECKLIST

Facility Name: _____ **Inspection Date:** _____

Inspector Name: _____ **Inspector Signature:** _____

- The intent of this inspection is to ensure the free flow of stormwater within on-site conveyance systems and prevent damage/flooding.
- **If maintenance is needed, please provide an explanation, and document all corrective actions performed.**
- **Inspections shall include visually accessible infrastructure only; at no time shall inspection personnel enter a confined space.**
- Retain the completed checklists for five (5) years.

Item	Item Checked (Y/N/NA)	Maintenance Needed (Y/N)	CORRECTIVE ACTIONS/COMMENTS *Items which cannot be corrected immediately must be reported to the GHP/NPDES Program Manager*
CATCH BASINS / INLETS			
1. Look for debris and sediment blocking catch basin grates. If found, remove.			
2. Look for damage or cracks to the frame, grate, basin walls or bottom. If found, schedule repairs or replacement.			
3. Look for sediment and debris in the catch basin sump. If sediment fills 60% of the sump or comes within 6” of a pipe it should be scheduled for cleaning.			
4. If any type of filtering device is present, verify that the filter is not clogged, torn, or damaged; clean if clogged, replace if damaged.			
PIPES / CULVERTS			
5. Look for evidence of clogged piping (e.g. visual obstructions, standing water within manholes/inlets structures, etc.). If found, remove or schedule cleaning.			
6. Verify vegetation growth, if present, does not impede water flow. If it does, mow, cut back, or remove.			

GOOD HOUSEKEEPING PLAN (GHP)

STORMWATER CONVEYANCE SYSTEM INSPECTION CHECKLIST

Item	Item Checked (Y/N/NA)	Maintenance Needed (Y/N)	CORRECTIVE ACTIONS/COMMENTS *Items which cannot be corrected immediately must be reported to the GHP/NPDES Program Manager*
7. Inspect for damaged piping, inlets, outlets, headwalls, wingwalls, or excessive erosion. If found, make or schedule repairs.			
DITCHES / TRAPEZOIDAL SWALES			
8. Check for erosion, slumping, or undercutting. If found, make or schedule repairs.			
9. Look for trash and sediment accumulation. Remove all trash and remove sediment if it will impede water flow or clog downstream structures.			
10. Verify vegetation growth does not impede water flow. If it does, mow, cut back, or remove. Remove any trees or shrubs growing within the ditch.			
11. Check the integrity of check dams, filter socks, or other flow dissipation/filtering devices within the ditch or swale. Perform or schedule service if they are clogged, damaged, or deteriorated.			
12. Check inlets and outlets for debris accumulation, damage, or erosion. If found, make or schedule repairs.			

ADDITIONAL COMMENTS:

GUIDANCE DOCUMENT
GOOD HOUSEKEEPING PLAN - STORMWATER CONVEYANCE INSPECTIONS

INTRODUCTION

Maintaining catch basins, stormwater inlets, and other stormwater conveyance structures on a regular basis will remove pollutants, prevent backups, and ensure the system functions as intended to avoid flooding.

Each GHP-covered facility is required to conduct routine stormwater conveyance system inspections to ensure the free flow of stormwater within the conveyance system(s). The GHP includes a *"GHP Stormwater Conveyance System Inspection Checklist"*, to be used when completing the required inspections. This document provides additional background and guidance to aid facility personnel in completing the inspections.

CATCH BASINS / INLETS

Catch basins and inlets are all points for stormwater to enter storm drain systems. These structures are typically part of a larger conveyance system with many interconnected components where the impairment of one component can compromise the functionality of the larger system. Inlets and catch basins are subject to functional impairment by a variety of conditions, including:

- Structural damage including from vehicles and plows
- Cracks/joint separation at piping (inlet and outlet) connections
- Leaking due to cracks and joint separation
- Missing or damaged grates and grate frames
- Corrosion
- Blockage caused by debris, sediment, vegetation, or other objects

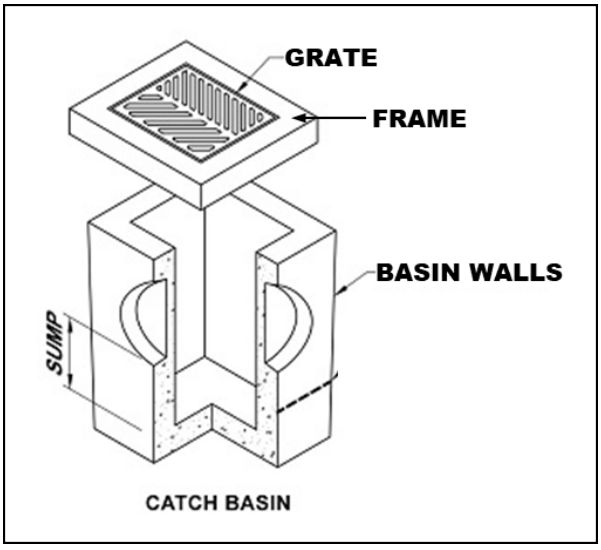

Figure 1 – Catch Basin Diagram

The following photos provide additional information related to the various inspection items, including examples of typical issues that may be encountered. The photo numbers correspond to the inspection checklist item number.

Inspection Item #1 [1]



Debris and sediment blocking inlet/catch basin grate.

Inspection Item #2 [2]



Damaged Grate

Inspection Item #2 [3]



Damaged Frame

Inspection Item #2 [4]



Failing brick walls with a stormwater inlet.

Inspection Item #2 [5]



Failing asphalt surrounding the inlet

[1] Grand Valley State University - https://www.gvsu.edu/groundswell/clogged-storm-drains-71.htm
[2] Georgia Department of Transportation – Stormwater System Inspection and Maintenance Manual, March 2020
[3] https://catchbasinauthority.ca/catch-basin-101/
[4] https://www.fixasphalt.com/catch-basin-repairs
[5] https://ccpia.org/catch-basin-and-manhole-inspections/

Inspection Item #3 [6]



Sediment and debris inside stormwater inlet

Inspection Item #3

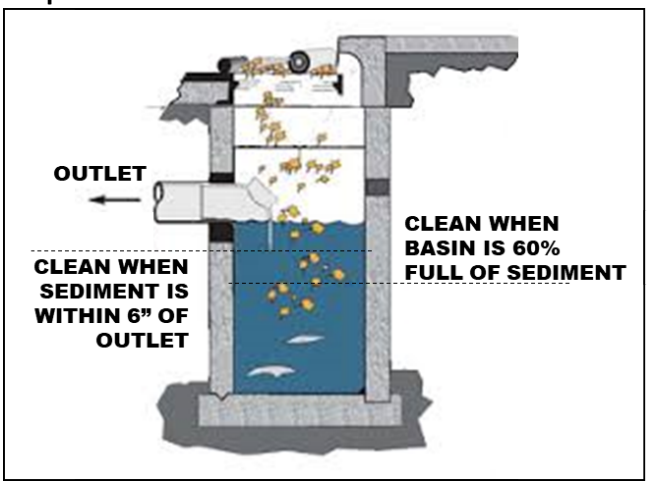

Remove sediment from a catch basin if it fills 60% of the sump or comes within 6" of a pipe.

Inspection Item #4 [7]



Example of inlet filter. Replace when filled or damaged. damaged.

Inspection Item #4 [8]



Example of an inlet filter sock, replace if

PIPES AND CULVERTS

Pipe systems are designed to convey stormwater runoff safely and effectively from inlets to various discharge points and outfalls. A culvert is a structure that channels water under an obstacle such as a roadway or railroad. These structures are subject to functional impairment by a variety of conditions, including:

- Blockage or obstruction due to build up of vegetation, debris, sediment, or other objects
- Cracks and/or joint separation
- Collapsed pipe
- Corrosion
- Root intrusion
- Lack of stabilization

[6] https://www.fixasphalt.com/catch-basin-repairs
[7] https://store.interstateproducts.com/products/Ultra-Drain-Guards/Ultra-Drain-Guard-Adjustable-Frame-Model
[8] https://www.newpig.com/pig-sediment-filter-sock/p/FLT787

Inspection Item #5 [9]



A pipe filled with sediment, inhibiting flow.

Inspection Item #5 [10]



Standing water around an inlet may indicate a blockage.

Inspection Item #6 [11]



Pipe conveyance filled with vegetation.

Inspection Item #7 [12]

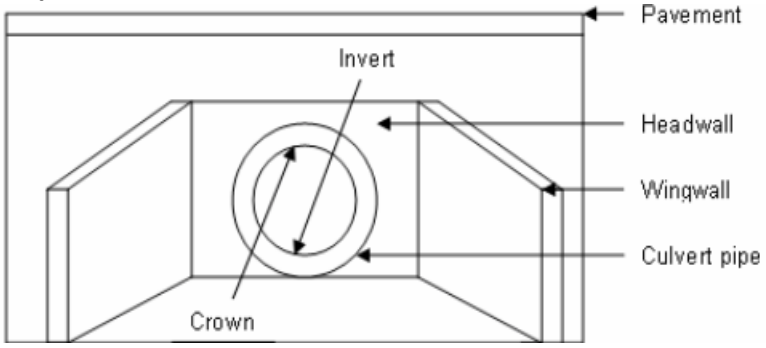

Diagram depicting various components of a culvert.

[9] Georgia Department of Transportation – Stormwater System Inspection and Maintenance Manual, March 2020
[10] https://www3.epa.gov/region9/water/npdes/stormwater-feature.html
[11] Georgia Department of Transportation – Stormwater System Inspection and Maintenance Manual, March 2020
[12] https://www.researchgate.net/figure/Components-of-a-Culvert_fig34_228685906

Inspection Item #7 [13]



A crack is the culvert headwall.

Inspection Item #7 [14]



Evidence of erosion around a culvert.

DITCHES AND SWALES

Ditches and swales serve similar functions. Both are used to convey stormwater. However, there are slight differences. A ditch is a narrow channel typically found along roads and at the edges of parking lots/driveways. A swale is like a ditch, but it is broad and shallow, and usually covered or lined with turfgrass or stone. Issues associated with these structures, which could impede their function include:

- Blockage or obstruction due to vegetation, debris, sediment, or other objects
- Erosion
- Rapidly moving water
- Lack of adequate vegetative cover for grass-lined channels

Inspection Item #8 [15]



Erosion and slumping within a drainage ditch.

Inspection Item #8 [16]



Slumping within a drainage swale.

[13] https://www.sbt-durabi.org/articles/xml/ARN0/
[14] https://lufkindailynews.com/news/local/culverts-crumbling-in-precinct-1/article_a9fed902-4379-5248-ab11-7471e2974298.html
[15] https://graniteseed.com/blog/how-to-stop-a-ditch-from-eroding/
[16] https://www.mnwcd.org/erosion-control

Inspection Item #9 [17]



Litter and debris within a ditch.

Inspection Item #9 [18]



Litter and debris within a swale.

Inspection Item #10 [19]



Cracks and joint separation in concrete channels, removal of vegetation may prevent future damage.

Inspection Item #11 [20]



Rock check dam across a channel.

Inspection Item #11 [21]



Filter sock check dams across a grass swale.

[17] https://craven.ces.ncsu.edu/2023/02/for-those-who-love-to-litter/
[18] https://www.cityoftulsa.org/government/departments/public-works/stormwater-quality/adopt-a-stream/
[19] Georgia Department of Transportation – Stormwater System Inspection and Maintenance Manual, March 2020
[20] EPA Stormwater Best Management Practice, Check Dams, December 2021
[21] EPA Stormwater Best Management Practice, Check Dams, December 2021

Inspection Item #12 [22]



Inlet to a rock-lined swale.

Inspection Item #12 [23]



Sediment accumulation at swale inlet.

END OF DOCUMENT

[22] https://www.stormwater.com/erosion-control/vegetation-management/article/13016118/inlet-protection-during-constructionand-after

[23] https://www.stormwater.com/erosion-control/vegetation-management/article/13016118/inlet-protection-during-constructionand-after

Appendix C

General Spill Response Procedures

SPILL RESPONSE AND NOTIFICATION PROCEDURES

A. Discovery of a Spill

1. Upon discovery of a spill, facility personnel should immediately assess the situation and determine if the spill is considered a "Minor" or "Major" spill. For a spill to be considered "Minor" all the following conditions must be satisfied:

    - ❖ The type of material spilled is known;
    - ❖ The spill is confined to the immediate work area;
    - ❖ The spill has not reached storm drains, sanitary sewer systems, open water, or surrounding soils;
    - ❖ The spill can be safely managed;
    - ❖ The employee can contain and clean up the spill with the PPE that is normally used in the work area;
    - ❖ The spill does not pose a serious threat of fire or an explosion; and
    - ❖ The spill does not pose conditions that are immediately dangerous to life or health.

2. If all the above conditions are met, the spill is considered "Minor". Refer to ***Section B*** of this document for appropriate response actions.

3. If all the above conditions are not met, then the spill is considered "Major". Refer to ***Section C*** of this document for appropriate response actions.

4. If a spill involves flammable liquids, ignitable vapors may be present - precautions must be taken to prevent ignition. Do not turn on or off equipment since sparks may be generated. Additionally, avoid the movement of equipment that could create static electricity. Larger spills of flammable liquids could pose a fire threat and would be considered a "Major" spill. Refer to ***Section C*** for appropriate actions.

B. Response to a "Minor" Spill

1. Identify the source of the spill and the direction in which the spill is heading.

2. Attempt to stop the spill at the source. Where applicable, the source of the spill shall be taken out of service until repairs can be made. If the spill is related to a fuel dispensing system, activate the Emergency Shut-Off (ESO) switch to prevent additional fuel disbursements.

3. If material is released outside a containment area, it is crucial that the material be contained as quickly as possible. Following proper safety procedures, use absorbent materials or diking to contain the spill. Prevent the spill from reaching storm drains, sanitary sewers, or open water. If a spill is flowing toward a drain, install temporary diking around the drain, block off the drain with a drain cover, or place absorbent material around the drain to prevent a discharge.

4. Once the spill has been stopped and contained, estimate the quantity of the spill. Consult applicable Safety Data Sheet (SDS) for material compatibility and environmental precautions. Note and follow recommendations regarding special precautions, spill response equipment, methods, or precautions. All cleanup work shall be conducted in accordance with existing safety protocols and SDS recommendations. Contact the facility Superintendent/Supervisor, or designee, for assistance if needed.

5. Recover or clean up the spilled material as much as possible. Material that cannot be reused must be discarded in accordance with state and federal regulations. Liquids absorbed by porous materials (e.g., wood, gravel, significant quantities of absorbent material, etc.) shall be placed into US DOT-approved 30-gallon or 55-gallon steel drums. Following cleanup, the container shall be secured and appropriately labeled to identify the contents and the date of the spill/cleanup. Containers shall be stored indoors and provided with secondary containment until transported off-site for disposal.

6. For spills that do not involve flammable liquids or other potential hazardous wastes, small quantities of used absorbent materials may be double bagged and disposed of along with municipal trash as long as all liquids have been absorbed (no free liquid may be present).

7. If the spilled material is a flammable liquid, corrosive liquid (pH ≤ 2 or ≥ 12.5), or other potential hazardous waste, all recovered product, impacted material, and used absorbent must be placed into a US DOT-approved containers/drums. Following cleanup, the container(s) shall be secured and appropriately labeled to identify the contents and the date of the spill/cleanup. Containers shall be stored indoors and provided with secondary containment until transported off-site for disposal. The facility Superintendent/ Supervisor, or designee shall be notified that a potential hazardous waste was released and that a waste characterization may be needed to facilitate proper disposal.

8. Surfaces that are contaminated by the spill shall be cleaned utilizing dry absorbent material. Tools and equipment that have been used in the cleanup must be decontaminated immediately after use. Decontamination water (if used) must be minimized, containerized, and disposed of properly.

9. If waste requires disposal, notify the facility Superintendent/Supervisor, or designee who will arrange for the proper characterization and disposal of any waste material. Representative sampling and analysis may be necessary to properly characterize the waste. The waste must be transported and disposed of in compliance with all applicable laws and regulations. Waste manifests, trip tickets, or bills of lading (if required) for waste disposal shall be kept on file.

10. Facility personnel shall restock/replace spill response equipment and absorbent materials used during the clean-up efforts.

11. The facility Superintendent/Supervisor, designee, or other appropriate County personnel shall be notified of the spill in accordance with ***Section D*** of this document.

C. Response to "Major" Spill

A "Major" spill is any discharge that does not meet the definition of a "Minor" spill. Any employee or contractor observing, being involved with, or recognizing a potential or actual spill of oil or other hazardous material, other than a "Minor" spill is responsible for performing the following actions:

1. If there is no danger to human health, attempt to stop and contain the spill at the source. If the spilled material is unknown, if PPE other than that which is typically used in your work area, is necessary to approach the spill area, or if assistance is required to stop the spill, do not attempt to contain the spill. If the spill is related to a fuel dispensing system, activate the Emergency Shut-Off (ESO) switch.

2. Most County employees lack the appropriate training to respond to "Major" spills. If the spill is of an unknown substance, is of a quantity that cannot be safely managed, or poses other risks beyond the training level of the employee, the employee should not attempt to contain or clean up the spill.

3. Evacuate individuals from the area and keep personnel away from the impacted area.

4. Immediately notify the facility Superintendent/Supervisor, or designee of the incident. The notified individual will determine the need for further evacuations and contact emergency response personnel (911), as necessary. *If a situation represents an immediate and grave danger to personnel, the public, structures, or other infrastructure, the individual discovering the incident may call 911 directly without first notifying facility management.*

5. The facility Superintendent/Supervisor or designee will determine if assistance from emergency response contractors is required to clean up the incident and will coordinate such spill response efforts with spill response contractors and other County agencies and first responders.

6. Facility personnel will provide assistance to emergency responders, as appropriate.

D. Reporting a Spill (Internal Notifications)

1. Once a spill is contained and cleanup operations have been initiated, the individual discovering the spill shall notify the appropriate County representatives and provide the following information:

    a) Identify the location, date, and time of the incident;
    b) Identify the type of material spilled or discharged;
    c) Estimate the quantity spilled and the rate of the spill;
    d) Identify the cause of the spill or discharge;
    e) Identify impacted media or infrastructure (soil, storm drains, open water bodies, etc.);
    f) Determine the extent of injuries involved; and
    g) Provide response measures implemented by the facility personnel.

E. Reporting a Spill (Regulatory Notifications)

State of Maryland Reporting Requirements (COMAR 26.10.01.05)

1. Upon discovery of a spill, the Responsible Person shall notify the MDE Emergency Response Division **within two (2) hours** by calling 866-633-4686. The caller shall be prepared to provide the following information:

    a) The time and date of the spill;
    b) The location and cause of the spill;
    c) The mode of transportation or type of facility involved;
    d) Type and quantity of oil spilled;
    e) Details regarding any assistance required;
    f) The name, address, and telephone number of the person making the report; and
    g) Any other pertinent information requested by the Department.

2. MDE will provide further guidance on additional responsibilities.

3. Within **ten (10) working days** of the completed removal and clean-up activities, the Responsible Person shall prepare a report using either County letterhead detailing the incident. The report shall contain the following:

    a) Date, time, and place of the spill;
    b) The amount and type of oil or hazardous substance spilled;
    c) A complete description of circumstances that contributed to the spill;
    d) A complete description of the containment and removal operations performed, including disposal sites to which oil refuse was transported;
    e) Procedures, methods, and precautions instituted to prevent the recurrence of an oil spill from the facility involved;
    f) Any other information considered necessary or required by the MDE for a complete description of the incident; and
    g) A certification that the information provided is true and correct to the knowledge of the person signing the report.

4. The completed report shall be submitted to mdeerd.mema@maryland.gov or faxed to 410-537-3932.

5. A digital copy of the completed report and any accompanying documentation shall be retained

Federal Reporting Requirements - National Response Center (40 CFR 110)

1. If any of the following criteria are met the Responsible Person shall notify the National Response Center (NRC) **within two (2) hours** of the spill discovery by calling 800-424-8802 or 202-426-2675.

    - ❖ The spill has caused a film, sheen, or discoloration of the surface water or shorelines;
    - ❖ The material spilled will violate applicable water quality standards (surface water or groundwater); or
    - ❖ The spill has caused a sludge or emulsion to be deposited beneath the surface of the water or on the shoreline.

2. At a minimum, the following information shall be provided to the NRC:

    a) Name, organization, and telephone number of reporting party;
    b) Name and address of the responsible party;
    c) Date, time, and location of the incident;
    d) Source and cause of the discharge;
    e) Type of material(s) discharged;
    f) Quantity of materials discharged;
    g) Danger or threat posed by discharge;
    h) Number and types of injuries (if any);
    i) Weather conditions at the incident location; and
    j) Other information to help emergency personnel respond to the incident.

3. If unable to report to the NRC, reports can be made to the EPA Regional Office at 800-438-2474 or the U.S. Coast Guard (USCG) at 202-372-1001. The NRC, EPA, or USCG will provide further guidance.

4. A digital record of the NRC notification and any accompanying documentation shall be retained on-site.

Federal Reporting Requirements - EPA Regional Administrator (40 CFR 112.4)

1. If the facility where the spill occurred is regulated under 40 CFR 112 and is required to have a Spill Prevention, Control, and Countermeasures (SPCC) Plan, the Responsible Person shall report the spill to the EPA Region III Administrator when any of the following criteria are met:

   - ❖ More than 1,000 gallons of oil is discharged to navigable waters or adjoining shorelines in a single incident; or
   - ❖ More than 42 gallons of oil is discharged to navigable waters or adjoining shorelines in each of two incidents occurring within any twelve-month period.

2. The report shall be made in writing **within 60 days** of the spill and shall contain:

   a) Name and location of the facility;
   b) Owner/operator name;
   c) Maximum storage/handling capacity of the facility and normal daily throughput;
   d) Corrective actions and countermeasures taken;
   e) Adequate description of the facility including maps, and flow diagrams;
   f) Cause of the discharge to navigable waters, including a failure analysis;
   g) Additional preventative measures taken or planned to minimize discharge reoccurrence; and
   h) Other information required by the EPA Regional III Administrator.

3. The report shall be submitted to the EPA Regional Administrator at the following address:

   EPA Regional Administrator
   US EPA Region 3
   1650 Arch Street (3RA00)
   Philadelphia, PA 19103-2029

4. A copy of the report shall be retained in the facility SPCC Plan.

Appendix D

Training Records

GOOD HOUSEKEEPING PLAN (GHP)
TRAINING ATTENDANCE LOG

FACILITY NAME: _____

DATE	NAME *(PRINT)*	SIGNATURE

By signing I affirm that I have completed the required annual training; and I am aware of and understand my responsibilities under this Plan.

GOOD HOUSEKEEPING PLAN (GHP)

School Bus Parking Lot
Fountain Green Road
Bel Air, MD 21015

June 30, 2025

TABLE OF CONTENTS

1.0 BACKGROUND & INTRODUCTION 1
1.1 Objectives 1
1.2 Potential Stormwater Pollutants 1
2.0 RESPONSIBILITIES 3
2.1 GHP Implementation 3
2.2 Plan Review and Modification 3
2.3 Inspections 3
2.3.1 GHP Site Inspections 3
2.3.2 Conveyance System Inspections 4
2.4 Training 4
3.0 BEST MANAGEMENT PRACTICES (BMPs) 5
3.1 Applicability of BMP Fact Sheets 5
3.2 BMP Fact Sheets 5

List of Tables

TABLE 1-1 POTENTIAL STORMWATER POLLUTANTS AND THEIR SOURCES 2

List of BMP Fact Sheets

GH-01 - Waste Management
GH-02 - Vehicle and Equipment Storage
GH-03 - Vehicle/Equipment Refueling
GH-04 - Vehicle Maintenance
GH-05 - Vehicle/Equipment Washing
GH-06 - Material Storage
GH-07 - Aboveground Storage Tanks
GH-08 - Resident Drop-Off Centers
GH-09 - Stockpiles
GH-10 - Deicing Materials

Appendices

Appendix A: GHP Site Inspection Checklist
Appendix B: GHP Stormwater Conveyance Inspection Checklist
Appendix C: General Spill Response Procedures
Appendix D: Training Records

List of Acronyms

AST	-	Aboveground Storage Tank
BMP	-	Best Management Practice
CFR	-	Code of Federal Regulations
GHP	-	Good Housekeeping Plan
MDE	-	Maryland Department of the Environment
MS4	-	Municipal Separate Storm Sewer System
NPDES	-	National Pollutant Discharge Elimination System
SPCC	-	Spill Prevention, Control, and Countermeasure Plan

1.0 BACKGROUND & INTRODUCTION

Polluted stormwater runoff has the potential to enter the County's storm sewer systems (referred to as a municipal separate storm sewer system or MS4), and then discharge, untreated, into local water bodies. To address this potential stormwater pollution, the County is required to obtain a NPDES permit from the Maryland Department of the Environment (MDE). The NPDES Permit requires the County to take actions to prevent stormwater pollution, maintain storm sewer systems, monitor stormwater discharges, and develop and implement comprehensive management programs to minimize the discharge of pollutants from the storm sewer system.

To comply with Part IV.D.4.b of the County's Phase I MS4 Permit, the County must develop, implement, and maintain a Good Housekeeping Plan (GHP) for certain County-owned properties not required to be covered under Maryland's General Permit for Discharges from Stormwater Associated with Industrial Activities *(General Permit 12-SWA / 20-SW).*

To support this effort, a *"Good Housekeeping Plan Applicability Certification"* has been developed to evaluate and document if a specific County-owned facility is subject to the GHP requirements. The *"GHP Applicability Certification"* includes the following ten (10) potential stormwater polluting activities. If any of the covered activities are performed at the facility, then that facility is required to implement a site-specific GHP. The GHP will include each of the potential stormwater polluting activities identified in the *"GHP Applicability Certification"* and corresponding pollution prevention procedures.

- Waste Management
- Vehicle and Equipment Storage
- Vehicle/Equipment Refueling
- Vehicle Maintenance
- Vehicle/Equipment Washing
- Material Storage
- Aboveground Storage Tanks
- Resident Drop-Off Center
- Stockpiles
- Deicing Materials

1.1 Objectives

The GHP was developed to outline suitable practices, procedures, and protocols, or Best Management Practices ("BMPs") for reducing and/or preventing stormwater pollution associated with operations at covered County-owned properties. The intent of the pollution prevention procedures included in the GHP is to limit the release of materials with the potential to impact stormwater, this includes reducing or eliminating (to the extent practical):

- The occurrence of spills and leaks;
- The accidental dumping or release of materials;
- The accumulation of waste, trash, debris, unused parts/equipment, etc.;
- The exposure of hazardous materials to precipitation/run-off;
- Stormwater run-off contamination by improperly stored materials; and/or
- Illicit discharges to the storm drain system.

1.2 Potential Stormwater Pollutants

Table 1-1 on the following page provides a list of common potential pollutants that may result from the GHP-regulated activities identified above. Understanding the sources of these pollutants can help in achieving the goals and objectives of the GHP program.

TABLE 1-1 POTENTIAL STORMWATER POLLUTANTS AND THEIR SOURCES

		Waste Management	Vehicle/Equipment Storage	Vehicle/Equipment Refueling	Vehicle Maintenance	Vehicle/Equipment Washing	Material Storage	Aboveground Storage Tanks	Resident Drop-Off Center	Stockpiles	Deicing Materials
Pollutants	**Sources**	**Associated GHP Activity**									
Sediment	Land disturbance; erosion; paved surfaces; material stockpiles; waste storage; salt/abrasive application	X				X	X		X	X	X
Hydrocarbons *(petroleum compounds)*	Leaking vehicle and equipment; vehicle and equipment cleaning; spills; improper storage; maintenance activities; scrap metal disposal; improper disposal	X	X	X	X	X	X	X	X		
Metals	Vehicle brake and tire wear; vehicle/equipment exhaust; batteries; galvanized metal; paint and wood preservatives; fuels, pesticides, and cleaners; vehicle fueling, maintenance, and washing; industrial waste	X	X	X	X	X	X	X	X		
Toxic Chemicals	Pesticide application; improper chemical storage; leaks and spills from storage containers; leaking vehicles; maintenance activities	X	X		X	X	X	X	X		
Chlorides	De-Icing chemicals										X
Trash/Debris	Improper waste storage and disposal; leaking trash containers; littering; poor housekeeping	X	X				X		X		
Nutrients (nitrogen and Phosphorus)	Fertilizers; malfunctioning septic systems; sewer overflows; animal/pet waste; vehicle washing; decaying grass and leaves; leaking trash containers; atmospheric deposition	X				X	X		X		

2.0 RESPONSIBILITIES

2.1 GHP Implementation

A separate GHP is required for each covered facility. The following individual *(identified by name and/or title)* is accountable for the administration and implementation of the GHP at this facility and has the authority to commit the necessary resources to implement this Plan.

_____

Name and/or Title of Responsible Person

The Responsible Person listed above shall ensure that facility personnel involved in any GHP-covered activities identified in this Plan, are provided with access to, and are familiar with, the contents of this Plan.

2.2 Plan Review and Modification

The *"GHP Applicability Certification"* completed for this facility must be reviewed and updated once every permit term, or within one (1) year of substantial changes to a facility's operations that could reasonably contribute to stormwater pollution. Any newly constructed/acquired facility must be assessed within one (1) year of initiating operations at the facility. The facility's GHP must be amended and reissued to the facility within one (1) year of any changes to the facility's *"GHP Applicability Certification"*.

When warranted, the BMP Fact Sheets provided in Section 3.0 may need to be updated or revised. At the same time, additional BMP Facts Sheets may be added. The need for such updates or modifications will be at the discretion of the County's GHP Program Administrator.

2.3 Inspections

The County's MS4 permit requires each facility covered by a GHP to have the following:

1. Written procedures for annually assessing County properties to prevent the discharge of pollutants, spills, and leaks into the County's storm sewer system; and

2. Written procedure for performing stormwater conveyance system inspections and for removing debris that may cause clogging, backups, and flooding.

To meet these requirements, each facility that is covered by a GHP will be required to complete routine site inspections and stormwater conveyance system inspections as detailed below. Facility management will be responsible for ensuring the necessary inspections are completed within the required timeframes, that corrective actions (if needed) are performed, and that records of inspections and completed corrective actions are maintained for at least five (5) years.

2.3.1 GHP Site Inspections

The GHP Site Inspection will be performed to ensure that each GHP-covered facility is being properly maintained and that there are no visible signs of pollutants entering the stormwater system. GHP facilities shall utilize the *"GHP Site Inspection Checklist"*, provided in ***Appendix A*** to complete the required inspection. At a minimum, each facility is to be inspected every five (5) years.

2.3.2 Conveyance System Inspections

Stormwater conveyance systems are generally comprised of curbs and gutters, catch basins, inlet structures, swales, channels, piping, culverts, detention ponds, outfalls, or other structures that are used to collect, contain, and convey stormwater runoff.

The unimpeded movement of stormwater through conveyance systems is critical in avoiding backups and flooding, which can impede facility operations and damage property. Routine inspections and preventative care of stormwater conveyance systems can ensure these systems function as intended and prevent the need for costly and time-consuming repairs and retrofits.

Each GHP-covered facility is required to conduct routine stormwater conveyance system inspections to ensure the free flow of stormwater within the conveyance systems. GHP-covered facilities shall utilize the *"GHP Stormwater Conveyance System Inspection Checklist"*, provided in ***Appendix B*** to complete the required inspections. At a minimum, facility conveyance system inspections are to be conducted every five (5) years.

2.4 Training

As part of the GHP requirements within the County's Phase I NPDES permit, annual training must be provided to all appropriate staff and contractors. Such training shall be provided to any individuals responsible for implementing the GHP, performing the required inspections, or involved in any of the GHP-covered activities identified in this Plan. The required training shall focus on the duties and responsibilities assigned to site personnel in implementing the GHP and the best management practices (BMPs) prescribed in this Plan for preventing, reducing, and eliminating the discharge of pollutants during facility activities.

The County's MS4/GHP Program Coordinator will be responsible for developing the required training and disseminating it to GHP-covered facilities. Each GHP-covered facility will be responsible for identifying staff/contractors who must attend annual training, ensuring identified staff complete the required training, and maintaining records that document training dates and attendees. Training records and other documentation shall be maintained in ***Appendix D*** of this Plan.

3.0 BEST MANAGEMENT PRACTICES (BMPs)

This section contains a BMP Fact Sheet for each of the ten (10) GHP-regulated activities. The County's operations are not limited to the BMPs contained within this document; nor is the County required to implement all of the pollution prevention measures identified within each BMP Fact Sheet. The County should select and implement those measures that are applicable and have the greatest potential for reducing stormwater pollution.

The BMP Fact Sheets contained within this document offer recommended protocols for a particular activity. These pollution prevention measures are considered non-structural BMPs with a focus on source control of potential pollutants.

3.1 Applicability of BMP Fact Sheets

The *"GHP Applicability Certification"* completed for this facility has identified the activities conducted at this facility that require coverage under this Plan. Each of the BMP Fact Sheets shall be marked as to whether they are applicable or not applicable to this facility. The Applicable/Not Applicable indicator on each BMP Fact Sheet can be revised in response to changes in operations at the facility.

3.2 BMP Fact Sheets

BMP Fact Sheets can be found on the following pages. For the sake of consistency, the general outline of a BMP Fact Sheet will be as follows:

- Identification of GHP-covered activity.
- Applicability of the BMP Fact Sheet to the facility.
- A general description of the concern the activity poses to stormwater.
- Recommended pollution prevention measures for reducing/eliminating stormwater pollution.
- Additional sources of information, if applicable.

WASTE MANAGEMENT

Not Applicable ☒ Applicable ☐

CONCERN

Improperly managed waste can allow trash and debris to be washed into storm drains which poses a concern to water quality, marine life, and public health. It also has the potential to create obstructions in the drainage system, which can lead to backups and flooding. Additionally, improper storage and handling of waste materials can allow pollutants including oils and greases, toxic and chemical compounds (including nutrients), bacteria, metals, and other potentially hazardous wastes to enter waterways.

POLLUTION PREVENTION MEASURES

General *(applicable to all waste management activities)*

1) Provide suitable containers, preferably with working covers, to collect waste materials.
2) Ensure that appropriate waste containers are available in areas where waste is generated.
3) Provide a cover over waste storage areas, if feasible.
4) Avoid positioning waste receptacles near storm drains, water bodies, or areas of concentrated runoff.
5) Ensure that lids to waste containers *(if present)* are kept closed to prevent the intrusion of precipitation and prevent trash from blowing out of the receptacle.
6) For waste receptacles, which do not have lids and could leak, containers should be inspected regularly and controls (e.g., containment, spill response, etc.) shall be enacted whenever leaks or dry-weather discharges are observed.
7) Routinely inspect waste containers, roll-offs, compactors, and other waste receptacles for the presence of excessive waste accumulation and overflowing containers.
8) Ensure that wastes accumulating on the ground are placed in a suitable waste container.
9) Ensure that wastes are removed from the facility regularly by a licensed and contracted vendor.
10) Repair or replace damaged waste container lids.

Trash Compactors

1) Routinely inspect trash compactors for malfunctioning equipment or leaking hydraulic oil and provide the appropriate spill response if leaking equipment is encountered.
2) Regularly inspect compactors for leaking fluids and implement appropriate controls such as spill response/cleanup, collection or diversion of released fluids, providing secondary containment, etc. whenever leaks or dry-weather discharges are observed.

Scrap Metal Collection Containers

1) Avoid placing oily or grease-covered items in uncovered scrap metal recycling collection containers. If needed, wrap oily/greasy items in plastic garbage bags before placing them in the collection container.

Hazardous/Universal Wastes

1) Ensure that hazardous waste and universal wastes (e.g., batteries, bulbs, etc.) are collected and stored indoors or within covered collection containers.
2) Verify that hazardous/universal waste collection containers are in good condition, not leaking, and compatible with the wastes being stored.

Street Sweeping / Vactor Truck Material Storage

1) Do not site storage areas near storm drains, open water bodies, or areas of concentrated runoff.
2) Install sediment control devices (e.g. silt fence, silt socks, hay bales, etc.) around the staging area. Inspect these controls regularly and replace them as needed.
3) Cover the materials staging area, if feasible.
4) Provide oil-absorbent booms if necessary to control oily discharge. Inspect and replace booms regularly.
5) The staging area should be checked periodically for evidence of sediment migrating outside of the staging area. Material that has migrated out of the staging area should be promptly swept and returned to the staging area or disposed of.

Waste Cooking Oil/Grease

1) Maintain storage containers indoors or within a covered location, if feasible.
2) Storage containers shall be secured to prevent infiltration of precipitation and accidental/intentional spills or releases.
3) Carefully transfer waste oil/grease to the appropriate collection container to avoid spills.
4) Maintain suitable spill response equipment near collection containers. Immediately clean up any spilled oil/grease. Keep the exterior of the collection container clean and free of spilled oil/grease.
5) Provide secondary containment for collection containers, if feasible.

VEHICLE AND EQUIPMENT STORAGE

Not Applicable ☐ Applicable ☒

CONCERN

Vehicles and equipment may be stored onsite to support various County operations (e.g., construction, maintenance, snow removal, roadside assistance, mass transit, mowing, etc.). Examples of County owned and operated vehicles and equipment stored onsite at any given time include but are not limited to, the following: cars, trucks, buses, emergency response vehicles, garbage trucks, heavy equipment (backhoes, frontend loaders, etc.), forklifts, towable generators, portable light stands, and roadside equipment. Vehicle and equipment storage is considered a pollutant source due to the potential for incidental releases of petroleum products, lubricants, and various automotive fluids.

POLLUTION PREVENTION MEASURES

1) When possible/practical, store vehicles and equipment inside or under cover to prevent exposure to precipitation.
2) If vehicles or equipment must be stored outside, store vehicles/equipment in designated areas away from areas of concentrated runoff, storm drains, and other stormwater conveyances.
3) Vehicles and equipment shall be staged on impervious (asphalt or concrete) surfaces;
4) Keep truck beds clean and ensure potential stormwater pollutants are stored in closed containers, covered, or otherwise protected from stormwater exposure.
5) Conduct routine visual inspections of vehicles and equipment for the presence of leaks and respond accordingly.
6) Leaking vehicles/equipment should be moved inside or under cover. At a minimum, drip pans or absorbent pads shall be used to contain the leak until the vehicle/equipment can be relocated and the leak addressed.
7) Drain all fluids from wrecked or heavily damaged vehicles and equipment before storage.
8) Have an adequate supply of appropriate spill response equipment readily available and clean up all spills and leaks immediately utilizing dry cleaning techniques (e.g. absorbents and brooms).
9) Train staff in spill response so that incidents are addressed in a timely fashion.
10) Do not wash down areas where leaks have collected on ground surfaces; use dry cleaning methods such as granular absorbents and brooms.

VEHICLE AND EQUIPMENT REFUELING

Not Applicable ☒ Applicable ☐

CONCERN

Refueling activities associated with County vehicles and equipment can result in a discharge of fuel (gasoline and diesel fuel), which has the potential to enter the storm drain system and/or a nearby waterway. Such releases can introduce hydrocarbons, metals, and other toxic chemicals to stormwater runoff.

POLLUTION PREVENTION MEASURES

General Procedures *(applicable to all refueling activities)*

1) Routinely *(at least daily)* inspect the fuel dispensing area for any spills or leaks.
2) Routinely inspect fuel dispensing equipment looking for leaking or damaged equipment. Damaged or malfunctioning equipment shall be taken out of service until it has been repaired.
3) Fuels will only be dispensed into authorized vehicles, equipment, and approved containers.
4) Vehicle operators must remain outside of their vehicles and in attendance of fuel dispensers at all times while dispensing fuel.
5) Third-party contractors must be trained in proper refueling procedures and pollution prevention.
6) Do not utilize a foreign object to keep the dispenser nozzle in the open position. If present, a “hold-open” latch on the nozzle may be used.
7) Do not “top off” a vehicle’s fuel tank once the dispenser nozzle’s automatic shut-off has been activated. Topping off tanks may result in spills. Post signs in fueling areas warning vehicle operators against "topping off" of vehicle fuel tanks.
8) After refueling has stopped, allow several seconds to pass before removing the nozzle and returning it to the dispenser. This will prevent incidental dripping from the nozzle.
9) Employees refueling vehicles shall note the location of the “Emergency Fuel Shut Off” switch, to be used to stop the flow of fuel to the dispensers in the event of a release or emergency.
10) Have an adequate supply of appropriate spill response equipment readily available and clean up all spills immediately utilizing dry cleaning techniques (e.g. absorbents and brooms).
11) Immediately clean up and dispose of used absorbent material.
12) Do not wash down fueling areas; use dry cleaning methods such as granular absorbents and brooms.
13) Conduct refueling activities over impervious (e.g. concrete) surfaces. Place drip pans or absorbent pads under the nozzle if fueling occurs over a permeable surface such as grass or soil.
14) Install oil control devices in storm drains that may receive contaminated runoff from fueling areas.
15) Cover fueling areas with a canopy or roof to prevent direct contact with rainfall. Direct run-on away from fueling areas and collect fueling area run-off in a dead-end sump or oil-water separator.

Mobile Equipment Refueling

1) Refuel equipment on an impervious surface, downgradient of, and at the farthest practical distance from any storm drain, stormwater conveyance, stormwater management feature, or waterway.
2) Utilize secondary containment when refueling equipment (when practical).
3) Ensure mobile refuelers are parked in designated locations and away from areas of concentrated run-off, storm drains, and other stormwater conveyances.
4) Ensure that procedures are in place and that staff is properly trained in spill response/cleanup so that leaks and spills are addressed appropriately and promptly.

VEHICLE MAINTENANCE

GH-04

Not Applicable ☒ Applicable ☐

CONCERN

Vehicle and equipment maintenance can impact the water quality of nearby waterways by exposing stormwater to various pollutants including petroleum hydrocarbons, solvents, antifreeze/coolants, used oil, lubricating oil, grease, brake fluid, metals, and various chemicals. Additionally, vehicles that are wrecked or awaiting repair can be a source of pollution if leaking fluids are not properly controlled.

POLLUTION PREVENTION MEASURES

1) Conduct vehicle and equipment maintenance activities indoors.
2) Make sure incoming vehicles and equipment are inspected for leaking fluids and oil.
3) Move leaking vehicles or equipment indoors or under cover as soon as possible. At a minimum, a drip pan or absorbent pads shall be utilized to contain the leak until the vehicle/equipment can be relocated and the leak addressed.
4) Avoid performing maintenance on vehicles in close proximity to exterior doorways, which may allow released fluids to migrate outdoors.
5) Have an adequate supply of appropriate spill response equipment readily available and clean up all spills and leaks immediately utilizing dry cleaning techniques (e.g. absorbents and brooms).
6) Keep maintenance areas neat and well organized. Remove dirt, debris, and used absorbent regularly.
7) Inspect maintenance areas as well as maintenance equipment on a routine basis.
8) Store vehicles, parts, and generated wastes indoors or off the ground and under cover whenever possible. When practical, provide secondary containment.
9) Promptly transfer used fluids to the proper waste container; do not leave full drip pans or other open containers around the shop. Empty and clean drip pans and containers regularly.
10) Waste liquids shall not be poured into floor drains, sinks, outdoor storm drain inlets, or other storm drains or sewer connections. Liquid wastes are to be collected in properly labeled containers and disposed of by a licensed waste hauler or other appropriate method.
11) Store leaking batteries in a sealed container and provide secondary containment, if feasible.
12) Clean all parts indoors utilizing a self-contained parts washer.
13) Do not hose down indoor service areas to storm drains or areas where it can seep into groundwater.
14) Maintain floor drains in good working order and inspect for proper function on a routine basis. Consider plugging floor drains that discharge to the storm sewer.
15) Ensure oil/water separators (if present) are maintained in proper working order and are checked on a routine basis for the presence of oil.
16) If maintenance work must be performed outdoors, adhere to the following requirements:
    - Conduct maintenance activities over an impervious surface, away from stormwater inlets.
    - Cover outdoor maintenance areas and direct stormwater run-on away from the area.
    - Use drip pans or drop cloths underneath the equipment to catch leaks and drips.
    - Have an adequate supply of appropriate spill response equipment readily available.
    - Clean all spills immediately using dry cleaning techniques (e.g. absorbents and brooms).
    - Avoid performing maintenance activities during precipitation events.
    - Limit temporary outdoor maintenance activities to a single shift/day if additional time is needed to cover the work area at the end of each day/shift.

BMP Fact Sheet

VEHICLE AND EQUIPMENT WASHING

GH-05

Not Applicable ☒ Applicable ☐

CONCERN

Vehicle and equipment washing can generate washwater that contains oil, grease, organic compounds, surfactants, phosphates, metals, and suspended solids. If vehicles/equipment are washed outdoors on impervious surfaces, dirty washwater can contaminate stormwater that ends up in waterways. Washing equipment over pervious surfaces can allow washwater to seep into the ground contaminating groundwater.

POLLUTION PREVENTION MEASURES

1) Vehicle and equipment washing should only be conducted in designated indoor wash bays that capture and recycle washwater to the extent practical.
2) Wastewater from the washing facility should be discharged to the sanitary sewer system under the authorization of a wastewater discharge permit issued by the local municipal authority.
3) The floor of indoor vehicle wash bays should be completely bermed or sloped to collect wash water and prevent migration outdoors.
4) No other activities (e.g., fluid changes, repairs, material storage) shall be performed in wash areas.
5) Keep the wash bay neat and well organized. Sweep or pick up all trash and debris daily or as needed.
6) Solid materials accumulated on vehicles or in vehicle beds (e.g. salt, soil, grass, etc.) shall be knocked off or otherwise removed from the vehicle (while inside the wash bay) prior to washing. Solid materials shall be collected and disposed of properly.
7) For vehicles too large to completely fit in the wash bays, only the portion of the vehicle physically located in the confines of the wash bay shall be cleaned. The vehicle shall then be rotated to allow for the remaining portion of the vehicle to be washed.
8) Use nozzles that automatically turn off water when not in use and consider high-pressure, low-volume sprays.
9) Avoid detergents as much as possible. If detergents are necessary, use a biodegradable, phosphate-free detergent.
10) If discharging to an oil-water separator, use a non-emulsifying detergent.
11) Inspect floor drain systems, holding tanks, and conveyances associated with designated wash areas regularly. Maintain oil/water separators and/or process flowthrough separators on a routine basis.
12) Use commercial car washes when vehicle or equipment washing cannot be performed onsite without causing impacts to stormwater.
13) If washing must occur onsite and outdoors, use a designated impervious area that is marked with posted signs indicating proper washing procedures. This area must be bermed to contain the wash water and graded to direct the wash water to the sanitary sewer, an oil-water separator, a holding tank, a dead-end sump, or other containment area. Captured water shall be disposed of properly.
14) Avoid steam cleaning and engine/undercarriage washing which can produce high pollutant concentrations. If steam cleaning or engine washing is necessary, perform such cleanings within isolated indoor areas, and ensure wash water is treated and discharged to the sanitary sewer (if permitted to do so) or captured for off-site disposal.
15) Train staff in proper washing techniques and how to confine washing to designated wash areas.
16) Consider alternatives to washing such as using air to blow grass and debris from small equipment, wet-wiping equipment with rags, etc.

BMP Fact Sheet

MATERIAL STORAGE

GH-06

Not Applicable ☒ Applicable ☐

CONCERN

The storage of petroleum products, chemicals, paints, cleaners, pesticides, fertilizers, bags of erodible materials like sand, cement, and soil, and other potential pollutants can negatively impact surface waters through the accidental releases or leaching of materials into stormwater. Unprotected outdoor storage areas can generate a wide range of stormwater pollutants, such as sediment, nutrients, toxic materials, and petroleum products.

POLLUTION PREVENTION MEASURES

1) Whenever possible, store containers (e.g. drums, bins, bags, cans, and totes) indoors or under cover to limit exposure to stormwater.
2) Designate specific areas for material delivery and storage that are away from heavy traffic areas, storm drains, stormwater conveyances, and areas of concentrated run-off.
3) Designated outdoor storage areas should be paved or consist of an impervious surface.
4) Provide secondary containment for materials whenever possible or required per regulation.
5) Store materials on pallets to prevent stormwater run-on from coming into contact with materials, prevent container corrosion, and allow for better leak detection. Pallets must be in good condition and promptly replaced once damaged or deteriorated.
6) Stack containers according to the manufacturer's recommendations to avoid damage.
7) Immediately replace damaged, corroded, or leaking containers.
8) Ensure all storage containers are clearly labeled with their contents.
9) Keep containers tightly sealed after use.
10) Maintain an accurate inventory of hazardous substances and limit on-site storage to that which is necessary to support facility operations.
11) Keep storage areas neat and well organized; remove debris and unneeded material promptly.
12) If empty drums are stored outdoors, ensure that all openings are equipped with caps to prevent water intrusion and that the drum/storage area is labeled "Empty Drums".
13) Have an adequate supply of appropriate spill response equipment readily available and clean up all spills and releases immediately utilizing dry cleaning techniques (e.g. sweeping/absorbents).
14) Clean up all migrating dry materials upon discovery and address the source of the release.
15) Provide perimeter controls (e.g., berms, rock check dams, etc.) for erodible stockpiles of materials such as mulch, sand, and gravel to prevent migration into the stormwater system.
16) Routinely inspect material storage areas for leaks, material migration, and damaged or corroded containers. Ensure that secondary containment and other perimeter controls are in satisfactory condition.
17) Additional visual inspections of outdoor storage areas should be conducted after significant rainfall events (i.e., greater than 0.5 inches).

BMP Fact Sheet

ABOVEGROUND STORAGE TANKS

GH-07

Not Applicable ☒ Applicable ☐

CONCERN

Aboveground storage tanks (ASTs) may be used to store fuels, automotive fluids, chemicals, or deicing fluids. Leaks from tanks, piping, or other equipment and releases during fluid transfers can all impact stormwater quality. It is critical to maintain ASTs in good working condition to prevent spills and/or releases from occurring. Improperly managed storage tanks can cause significant environmental impacts.

POLLUTION PREVENTION MEASURES

General *(applicable to all storage tanks)*

1) ASTs should be installed and maintained in accordance with COMAR 26.10 and applicable fire codes.
2) ASTs should be provided with secondary containment, whenever feasible or required by regulation.
3) Secondary containment areas shall be maintained clean and dry; drain valves must be kept closed; accumulated liquid shall only be discharged if there are no visible signs of impacts, and in accordance with applicable regulations.
4) Inspect ASTs monthly to identify any leaking or malfunctioning equipment and ensure tanks are functioning as designed.
5) ASTs shall be equipped with a form of liquid-level detection (i.e. sight gauge, electronic monitoring).
6) ASTs shall be equipped with overfill prevention (i.e. overfill alarm and/or overfill prevention valve).
7) Tanks and piping should be protected from vehicle impact via barriers, bollards, guard rails, etc.
8) Install ASTs on solid foundations over impervious surfaces, and away from areas of concentrated run-off, storm drains, and other stormwater conveyances.
9) Properly label all storage tanks (e.g., contents, capacity, etc.).
10) Keep remote fills and fill port spill buckets clean and dry.
11) Keep fill ports, gates, and tank areas secured when not in use to prevent fuel theft and tampering.
12) Have an adequate supply of appropriate spill response equipment readily available and clean up all spills and leaks immediately utilizing dry cleaning techniques (e.g. absorbents and brooms).
13) Facilities that maintain 1,320 gallons or more of aboveground oil products shall prepare and implement a Spill Prevention, Control, and Countermeasure (SPCC) Plan, per 40 CFR 112.
14) Facilities that maintain 1,000 gallons or more of used oil or 10,000 gallons or more of virgin oil in ASTs shall obtain an Individual Oil Operations Permit from the MDE, per COMAR 26.10.01.09.
15) Owners/Operators of facilities that maintain more than 2,500 gallons of oil in ASTs are required to register each AST with MDE, per COMAR 26.10.01.10.

Bulk Fluid Transfers (Deliveries)

1) All bulk fluid transfer operations shall be performed under the direct supervision of knowledgeable County personnel. At no time shall the delivery vehicle or delivery vehicle operator be unsupervised.
2) The product level within the tank must be measured and available capacity verified before delivery.
3) Deliveries shall be made via fill ports equipped with catch basins to capture drips and spills.
4) Ensure an adequate supply of appropriate spill response equipment is readily available.
5) Post signs in delivery area displaying proper delivery procedures and emergency contact information.

ABOVEGROUND STORAGE TANKS

Used Oil Tanks

1) County personnel must verify the level of product in used oil tanks prior to filling.
2) Used oil tanks should only be filled via designated fill ports. Pumping used oil into the tank via a closed piping system is preferred to manually pouring used oil into the tank.

Brine Tanks

1) If multiple tanks are located onsite, the tanks should be plumbed to ensure that the complete failure of one tank will not drain all the tanks in the system (tanks must be isolated).
2) Minimize seeping and leaking at fittings by properly supporting piping and fittings, using flexible connectors or hoses to reduce stress, and installing corrosion-resistant fittings.
3) Consider placing hoses in non-permeable trenches or using drip-less nozzles to reduce repeated small spills.

RESIDENT DROP-OFF CENTER

Not Applicable ☒ Applicable ☐

CONCERN

Resident Drop-Off Centers are publicly accessible facilities where residents can drop off used automotive fluids (i.e. oil or antifreeze), municipal waste, recyclable, and/or organic waste, typically free of charge. Improper transfer or management of the waste materials can allow a number of pollutants including oils and greases, toxic and chemical compounds, nutrients, metals, and other wastes to enter waterways.

POLLUTION PREVENTION MEASURES

General *(applicable to all materials collected)*

1) Clearly identify waste materials accepted by the facility, and clearly mark designated collection areas.
2) Waste material should be inspected by a County representative, prior to disposal.
3) Avoid positioning waste receptacles near storm drains, water bodies, or areas of concentrated runoff.
4) When practical, receiving areas should be covered.
5) Do not allow containers to overflow or waste materials to accumulate on the ground.

Automotive Fluid Collection

1) Used oil, antifreeze, and automotive fluid receiving areas should be on impervious surfaces, covered, and provided with secondary containment, which shall be maintained clean and dry.
2) Provide lidded waste receptacles in the receiving area for the public to dispose of empty containers. Waste receptacles shall be emptied routinely and waste disposed of properly.
3) Collection areas shall be inspected daily and all trash and spilled liquids appropriately cleaned up.
4) The available capacity of waste liquid collection containers shall be routinely verified and waste removals scheduled, as needed.
5) Install appropriate controls to prohibit the overfilling of waste fluid collection containers.
6) Place appropriate spill response equipment in close proximity to drop-off areas.
7) If aboveground tanks are used to collect waste fluids, refer to BMP Fact Sheet GHP-07 (Aboveground Storage Tanks) for additional recommendations.

Organic Debris Collection

1) Routinely transfer collected organic debris/waste to a composting or disposal facility.
2) Do not permit composting of organic waste except at properly designed and permitted facilities.
3) Enact controls to prevent leaves and other windblown debris from entering stormwater inlets.

Municipal Waste / Recyclables Collection

1) Refer to BMP Fact Sheet GHP-01 (Waste Management) for additional recommendations.

BMP Fact Sheet

STOCKPILES

GH-09

Not Applicable ☒ Applicable ☐

CONCERN

The County may stockpile various erodible materials, the type of material can vary depending on the needs of the County. Stockpiled material may include soil, sand, millings, slag, cinders, sawdust, landscaping bark, compost, etc. Exposed stockpiles can easily erode due to wind or precipitation and contribute suspended solids to stormwater runoff.

POLLUTION PREVENTION MEASURES

1) Maintain stockpiles of erodible materials within roofed storage buildings or covered storage bins, if feasible. If not, stockpile material on an impervious surface and cover the stockpile.
2) Temporary stockpiles should be placed on an impermeable membrane (tarp) for quick clean-up.
3) Locate stockpiles away from drain inlets, catch basins, swales, areas of concentrated stormwater flow, water bodies, and environmentally sensitive areas.
4) Divert stormwater flows away from/around the stockpiles using a diversion device (e.g., temporary swale, berm, sandbags, or diversion fence).
5) Cover temporary stockpiles of erodible materials with a tarp that has been adequately secured. The covers must be in place at all times when the stockpile is not in active use.
6) When accessing a portion of the stockpile, only remove a section of the cover to minimize exposure to the elements.
7) Use barriers to isolate stockpiled materials from high-traffic areas to prevent tracking of materials.
8) Sweep (do not wash or hose down) in front of material stockpile storage areas at regular intervals, following loading and unloading activities, and during times of heavy use.
9) If material is observed migrating from the stockpile, clean up all migrated material upon discovery and provide additional controls to reduce migration from the stockpile. If such measures are ineffective implement controls to capture pollutants before they migrate off-site (e.g. silt fencing, inlet filters, filter socks, at-grade inlet protection, etc.).
10) Minimize material stockpile inventory based on historical inventory/usage records and public safety operational needs.
11) Cold mix asphalt shall be stored on and covered with plastic sheeting or comparable material.
12) Routinely inspect outdoor material stockpiles to verify existing controls are functioning properly and for signs of erosion or material transport.

BMP Fact Sheet

DEICING MATERIALS

GH-10

Not Applicable ☒ Applicable ☐

CONCERN

When salt and other de-icing materials are stored outside and uncovered, they have a much higher risk of being eroded and transported offsite by stormwater. Improper de-icing material and sand storage may result in stormwater runoff containing elevated concentrations of sodium chloride and dissolved solids. Sodium chloride (e.g., road salt) is an effective deicer but can be highly corrosive to stormwater facilities. Smaller waterways are at a higher risk to increases in salinity, which can threaten aquatic species. Additionally, runoff containing sodium chloride has the potential to reach drinking water sources where small traces can adversely impact public health.

POLLUTION PREVENTION MEASURES

1) Bagged de-icing chemicals must be stored indoors. If stored outdoors bags must be kept on pallets (off the ground) and covered at all times. Bags must be intact without holes or openings.
2) Bulk de-icing materials shall be stored under cover and on an impervious surface.
3) Bulk salt storage areas/buildings shall not be overfilled so that salt spills out beyond the entrance of the storage area/building.
4) Bulk salt storage areas/buildings shall be maintained in a structurally sound condition and in a way that prevents the release of salt and the infiltration of stormwater. Deicing materials should not touch the sides of metal storage containers.
5) Barriers such as berms, gates, knee walls, tarps, and/or straw bales shall be placed at the entrances of bulk salt storage areas/buildings to prohibit the migration of salt and prevent contact with precipitation/stormwater runoff.
6) Routinely inspect storage areas for migrating materials or deterioration of containment structures. Sweep up all migrating materials upon discovery and repair the source of the migrating pollutant.
7) Loading areas should be constructed of impervious material and covered or enclosed, to the extent practical, to reduce potential contact with stormwater.
8) Minimize the distance de-icing materials are transported during loading/unloading activities.
9) Prevent and/or minimize the spillage of salt and de-icing materials during loading/unloading activities, immediately clean spilled or tracked materials.
10) Sweeping of storage and loading/unloading areas shall be conducted immediately following loading/unloading activities.
11) Do not store de-icing materials (bulk or bagged) over or immediately adjacent to drains or waterways.
12) Control site drainage by diverting stormwater run-on away from storage/loading areas using appropriate measures (e.g., curbing, berms, etc.).
13) Slope storage/loading areas to direct salt-contaminated runoff to an appropriate collection area, and in a manner that prevents the runoff from reaching adjacent soil or surface waters.
14) Excess salt shall be removed from salt handling equipment (trucks, spreaders, etc.) following use/prior to storage. All cleaning shall occur on an impervious surface, which is sloped or curbed to contain any washwater and direct it to a collection area for recycling or proper disposal.

Appendix A

GHP Site Inspection Checklist

GOOD HOUSEKEEPING PLAN (GHP)
SITE INSPECTION CHECKLIST

Facility Name: _____ **Inspection Date:** _____

Inspector Name: _____ **Inspector Signature:** _____

- The intent of this inspection is to ensure that the site is being properly maintained and that there are no visible signs of pollutants entering the stormwater system.
- **A shaded status box designates an item in a non-compliant status. Please provide an explanation for all non-compliant items and subsequently document all corrective actions performed.**
- Retain the completed checklists for five (5) years.

Item	Status			CORRECTIVE ACTIONS/COMMENTS *Items which cannot be corrected immediately must be reported to the GHP/NPDES Program Manager*
	Yes	No	N/A	
GENERAL HOUSEKEEPING				
1. Are exterior areas of the facility free of accumulated trash, debris, and unneeded materials?				
2. Are stormwater drains and inlets free from debris, sediment, and evidence of spills/releases?				
3. Is the facility free from signs of erosion?				
4. Are paved surfaces free of accumulated sediment?				
5. Is spill response equipment available in maintenance areas, fueling areas, hazardous material storage areas, and/or other required areas?				
6. Are spill kits and absorbent materials clearly labeled and accessible (i.e. items are not piled on top of or in front of spill kits)?				
7. Are spill kits secured from being stolen or misused?				
8. Is there a labeled container present for the disposal of used spill cleanup material?				

GOOD HOUSEKEEPING PLAN (GHP)
SITE INSPECTION CHECKLIST

Item	Status			CORRECTIVE ACTIONS/COMMENTS *Items which cannot be corrected immediately must be reported to the GHP/NPDES Program Manager*
	Yes	No	N/A	
9. Does spill response equipment (i.e. spill kits, absorbent materials) need to be replenished?				
WASTE MANAGEMENT				
10. Are areas around solid waste containers/roll-offs/compactors free of excessive trash accumulation or overflowing containers?				
11. Are areas around solid waste containers/roll-offs/compactors free of visible evidence (i.e. leaks, staining) of ongoing stormwater pollution?				
12. Are scrap metal containers in good order and free from evidence of leaking oil/grease?				
13. For dumpsters, roll-offs, and other waste receptacles, where leaks are observed, have appropriate controls (e.g. containment, spill response, etc.) been enacted?				
14. Are the lids (if present) to solid waste containers closed?				
15. Is street sweeping/vactor waste being managed appropriately (i.e. no evidence of material migration)?				
16. Is waste cooking grease managed appropriately (i.e. no evidence of spilled material or excessive staining)?				
VEHICLE & EQUIPMENT STORAGE				
17. Are stored vehicles/equipment free from leaks?				
18. If leaks are present, are they being managed appropriately (drip pan or other methods in place to capture released liquids)?				
19. Are storage areas free of visible evidence of chronic leaks/spills (i.e. significant staining)?				

GOOD HOUSEKEEPING PLAN (GHP)
SITE INSPECTION CHECKLIST

Item	Status			CORRECTIVE ACTIONS/COMMENTS *Items which cannot be corrected immediately must be reported to the GHP/NPDES Program Manager*
	Yes	No	N/A	
VEHICLE & EQUIPMENT REFUELING				
20. Are the areas around refueling areas free from evidence of spills or leaks?				
21. Are refueling areas free of used absorbent material that has not been swept/cleaned up?				
22. Do fuel dispensers and hoses appear to be in good working order and well-maintained?				
VEHICLE MAINTENANCE				
23. Is there any indication that vehicle maintenance activities are being conducted outdoors?				
24. Is there any indication that vehicle maintenance activities are contributing to stormwater pollution?				
VEHICLE & EQUIPMENT WASHING				
25. If performed on-site, does all vehicle/equipment washing occur indoors?				
26. Is wash water collected and disposed of properly?				
27. Is there any indication that vehicle/equipment wash water is being released to stormwater conveyances or pervious areas?				
MATERIAL STORAGE				
28. Are all outdoor storage areas free from visible signs of leaks or spilled material?				
29. Are material storage containers in good condition?				

GOOD HOUSEKEEPING PLAN (GHP)
SITE INSPECTION CHECKLIST

Item	Status			CORRECTIVE ACTIONS/COMMENTS *Items which cannot be corrected immediately must be reported to the GHP/NPDES Program Manager*
	Yes	No	N/A	
30. Are drums, totes, and other containers (that are <u>not</u> empty) stored off the ground and covered, or stored indoors?				
31. Are liquid-containing drums/totes located outdoors provided with secondary containment?				
32. Are containers that are located outdoors equipped with closed lids except when material transfers are occurring?				
33. Are materials, which could impact stormwater, stored away from heavy traffic areas, or protected from vehicle collisions?				
34. Are chemical storage containers properly labeled?				
35. If empty drums are stored outside, are all openings equipped with caps to prevent water intrusion?				
ABOVEGROUND STORAGE TANKS				
36. Are all storage tanks, and surrounding areas free from visible signs of leaks or spilled material?				
37. Do storage tanks appear to be in good working order (e.g. free of obvious signs of damage or malfunctioning equipment)?				
38. Are remote fills associated with tanks free of liquid and debris?				
RESIDENT DROP-OFF CENTERS				
39. Are waste collection areas clearly identified?				
40. Are used oil/antifreeze collection tanks, containment structures, and surrounding areas free from visible signs of leaks or spilled material?				

GOOD HOUSEKEEPING PLAN (GHP)
SITE INSPECTION CHECKLIST

Item	Status			CORRECTIVE ACTIONS/COMMENTS *Items which cannot be corrected immediately must be reported to the GHP/NPDES Program Manager*
	Yes	No	N/A	
41. Do used oil/antifreeze collection tanks appear to be in good working order (e.g. free of obvious signs of damage or malfunctioning equipment)?				
42. Are empty used oil/antifreeze containers being collected and disposed of in the trash?				
43. Are areas around waste/recyclables containers free of excessive trash accumulation or overflowing containers?				
44. Are areas around waste/recyclables containers free of visible evidence (i.e. leaks, staining) of ongoing stormwater pollution?				
45. Are organic debris collection areas free of visible evidence of ongoing stormwater pollution (e.g. leaves and debris in stormwater conveyances)?				
STOCKPILES				
46. Are material piles, including salt, soil, sand, and millings isolated (i.e. covered, bermed, etc.) to prevent stormwater run-on and run-off?				
47. Are areas surrounding material piles (e.g. salt, soil, sand, millings, etc.) free of tracked or migrated material?				
DEICING MATERIALS				
48. Are all deicing materials stored indoors or undercover?				
49. Are salt storage structures in good condition (e.g. no evidence of material escaping or stormwater infiltration)?				
50. Is the salt loading area clean?				

GOOD HOUSEKEEPING PLAN (GHP)
SITE INSPECTION CHECKLIST

Item	Status			CORRECTIVE ACTIONS/COMMENTS *Items which cannot be corrected immediately must be reported to the GHP/NPDES Program Manager*
	Yes	No	N/A	
51. If deicing materials are tarped, is the tarp secure and covering the entire pile?				
52. Are bags of salt stored indoors, or off the ground and covered?				

ADDITIONAL COMMENTS:

Appendix B

GHP Stormwater Conveyance System Inspection Checklist

GOOD HOUSEKEEPING PLAN (GHP)
STORMWATER CONVEYANCE SYSTEM INSPECTION CHECKLIST

Facility Name: _____ **Inspection Date:** _____

Inspector Name: _____ **Inspector Signature:** _____

- The intent of this inspection is to ensure the free flow of stormwater within on-site conveyance systems and prevent damage/flooding.
- **If maintenance is needed, please provide an explanation, and document all corrective actions performed.**
- **Inspections shall include visually accessible infrastructure only; at no time shall inspection personnel enter a confined space.**
- Retain the completed checklists for five (5) years.

Item	Item Checked (Y/N/NA)	Maintenance Needed (Y/N)	CORRECTIVE ACTIONS/COMMENTS *Items which cannot be corrected immediately must be reported to the GHP/NPDES Program Manager*
CATCH BASINS / INLETS			
1. Look for debris and sediment blocking catch basin grates. If found, remove.			
2. Look for damage or cracks to the frame, grate, basin walls or bottom. If found, schedule repairs or replacement.			
3. Look for sediment and debris in the catch basin sump. If sediment fills 60% of the sump or comes within 6” of a pipe it should be scheduled for cleaning.			
4. If any type of filtering device is present, verify that the filter is not clogged, torn, or damaged; clean if clogged, replace if damaged.			
PIPES / CULVERTS			
5. Look for evidence of clogged piping (e.g. visual obstructions, standing water within manholes/inlets structures, etc.). If found, remove or schedule cleaning.			
6. Verify vegetation growth, if present, does not impede water flow. If it does, mow, cut back, or remove.			

GOOD HOUSEKEEPING PLAN (GHP)

STORMWATER CONVEYANCE SYSTEM INSPECTION CHECKLIST

Item	Item Checked (Y/N/NA)	Maintenance Needed (Y/N)	CORRECTIVE ACTIONS/COMMENTS *Items which cannot be corrected immediately must be reported to the GHP/NPDES Program Manager*
7. Inspect for damaged piping, inlets, outlets, headwalls, wingwalls, or excessive erosion. If found, make or schedule repairs.			
DITCHES / TRAPEZOIDAL SWALES			
8. Check for erosion, slumping, or undercutting. If found, make or schedule repairs.			
9. Look for trash and sediment accumulation. Remove all trash and remove sediment if it will impede water flow or clog downstream structures.			
10. Verify vegetation growth does not impede water flow. If it does, mow, cut back, or remove. Remove any trees or shrubs growing within the ditch.			
11. Check the integrity of check dams, filter socks, or other flow dissipation/filtering devices within the ditch or swale. Perform or schedule service if they are clogged, damaged, or deteriorated.			
12. Check inlets and outlets for debris accumulation, damage, or erosion. If found, make or schedule repairs.			

ADDITIONAL COMMENTS:

GUIDANCE DOCUMENT
GOOD HOUSEKEEPING PLAN - STORMWATER CONVEYANCE INSPECTIONS

INTRODUCTION

Maintaining catch basins, stormwater inlets, and other stormwater conveyance structures on a regular basis will remove pollutants, prevent backups, and ensure the system functions as intended to avoid flooding.

Each GHP-covered facility is required to conduct routine stormwater conveyance system inspections to ensure the free flow of stormwater within the conveyance system(s). The GHP includes a *"GHP Stormwater Conveyance System Inspection Checklist"*, to be used when completing the required inspections. This document provides additional background and guidance to aid facility personnel in completing the inspections.

CATCH BASINS / INLETS

Catch basins and inlets are all points for stormwater to enter storm drain systems. These structures are typically part of a larger conveyance system with many interconnected components where the impairment of one component can compromise the functionality of the larger system. Inlets and catch basins are subject to functional impairment by a variety of conditions, including:

- Structural damage including from vehicles and plows
- Cracks/joint separation at piping (inlet and outlet) connections
- Leaking due to cracks and joint separation
- Missing or damaged grates and grate frames
- Corrosion
- Blockage caused by debris, sediment, vegetation, or other objects

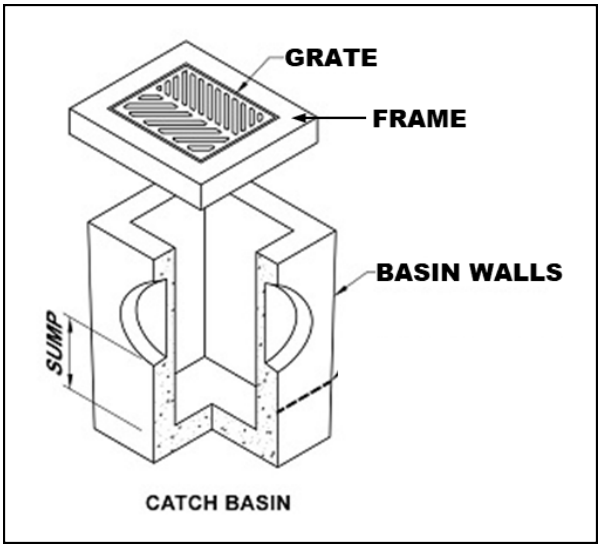

Figure 1 – Catch Basin Diagram

The following photos provide additional information related to the various inspection items, including examples of typical issues that may be encountered. The photo numbers correspond to the inspection checklist item number.

Inspection Item #1 [1]



Debris and sediment blocking inlet/catch basin grate.

Inspection Item #2 [2]



Damaged Grate

Inspection Item #2 [3]



Damaged Frame

Inspection Item #2 [4]



Failing brick walls with a stormwater inlet.

Inspection Item #2 [5]



Failing asphalt surrounding the inlet

[1] Grand Valley State University - https://www.gvsu.edu/groundswell/clogged-storm-drains-71.htm
[2] Georgia Department of Transportation – Stormwater System Inspection and Maintenance Manual, March 2020
[3] https://catchbasinauthority.ca/catch-basin-101/
[4] https://www.fixasphalt.com/catch-basin-repairs
[5] https://ccpia.org/catch-basin-and-manhole-inspections/

Inspection Item #3 [6]



Sediment and debris inside stormwater inlet

Inspection Item #3

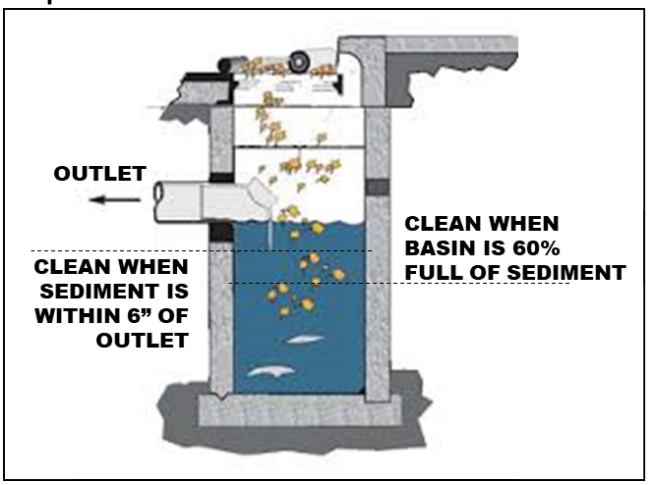

Remove sediment from a catch basin if it fills 60% of the sump or comes within 6" of a pipe.

Inspection Item #4 [7]



Example of inlet filter. Replace when filled or damaged. damaged.

Inspection Item #4 [8]



Example of an inlet filter sock, replace if

PIPES AND CULVERTS

Pipe systems are designed to convey stormwater runoff safely and effectively from inlets to various discharge points and outfalls. A culvert is a structure that channels water under an obstacle such as a roadway or railroad. These structures are subject to functional impairment by a variety of conditions, including:

- Blockage or obstruction due to build up of vegetation, debris, sediment, or other objects
- Cracks and/or joint separation
- Collapsed pipe
- Corrosion
- Root intrusion
- Lack of stabilization

[6] https://www.fixasphalt.com/catch-basin-repairs
[7] https://store.interstateproducts.com/products/Ultra-Drain-Guards/Ultra-Drain-Guard-Adjustable-Frame-Model
[8] https://www.newpig.com/pig-sediment-filter-sock/p/FLT787

Inspection Item #5 [9]



A pipe filled with sediment, inhibiting flow.

Inspection Item #5 [10]



Standing water around an inlet may indicate a blockage.

Inspection Item #6 [11]



Pipe conveyance filled with vegetation.

Inspection Item #7 [12]

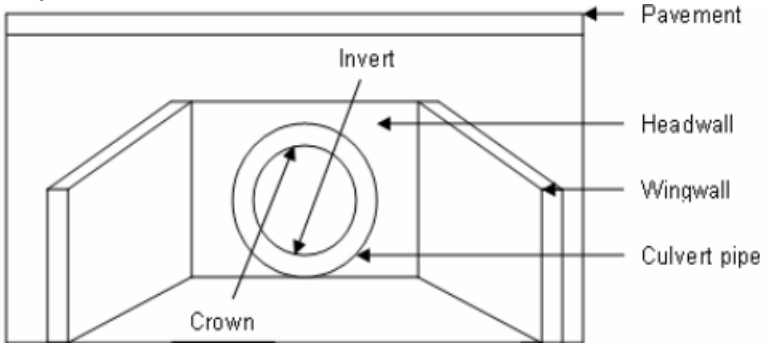

Diagram depicting various components of a culvert.

[9] Georgia Department of Transportation – Stormwater System Inspection and Maintenance Manual, March 2020
[10] https://www3.epa.gov/region9/water/npdes/stormwater-feature.html
[11] Georgia Department of Transportation – Stormwater System Inspection and Maintenance Manual, March 2020
[12] https://www.researchgate.net/figure/Components-of-a-Culvert_fig34_228685906

Inspection Item #7 [13]



A crack is the culvert headwall.

Inspection Item #7 [14]



Evidence of erosion around a culvert.

DITCHES AND SWALES

Ditches and swales serve similar functions. Both are used to convey stormwater. However, there are slight differences. A ditch is a narrow channel typically found along roads and at the edges of parking lots/driveways. A swale is like a ditch, but it is broad and shallow, and usually covered or lined with turfgrass or stone. Issues associated with these structures, which could impede their function include:

- Blockage or obstruction due to vegetation, debris, sediment, or other objects
- Erosion
- Rapidly moving water
- Lack of adequate vegetative cover for grass-lined channels

Inspection Item #8 [15]



Erosion and slumping within a drainage ditch.

Inspection Item #8 [16]



Slumping within a drainage swale.

[13] https://www.sbt-durabi.org/articles/xml/ARN0/
[14] https://lufkindailynews.com/news/local/culverts-crumbling-in-precinct-1/article_a9fed902-4379-5248-ab11-7471e2974298.html
[15] https://graniteseed.com/blog/how-to-stop-a-ditch-from-eroding/
[16] https://www.mnwcd.org/erosion-control

Inspection Item #9 [17]



Litter and debris within a ditch.

Inspection Item #9 [18]



Litter and debris within a swale.

Inspection Item #10 [19]



Cracks and joint separation in concrete channels, removal of vegetation may prevent future damage.

Inspection Item #11 [20]



Rock check dam across a channel.

Inspection Item #11 [21]



Filter sock check dams across a grass swale.

[17] https://craven.ces.ncsu.edu/2023/02/for-those-who-love-to-litter/
[18] https://www.cityoftulsa.org/government/departments/public-works/stormwater-quality/adopt-a-stream/
[19] Georgia Department of Transportation – Stormwater System Inspection and Maintenance Manual, March 2020
[20] EPA Stormwater Best Management Practice, Check Dams, December 2021
[21] EPA Stormwater Best Management Practice, Check Dams, December 2021

Inspection Item #12 [22]



Inlet to a rock-lined swale.

Inspection Item #12 [23]



Sediment accumulation at swale inlet.

END OF DOCUMENT

[22] https://www.stormwater.com/erosion-control/vegetation-management/article/13016118/inlet-protection-during-constructionand-after

[23] https://www.stormwater.com/erosion-control/vegetation-management/article/13016118/inlet-protection-during-constructionand-after

Appendix C

General Spill Response Procedures

SPILL RESPONSE AND NOTIFICATION PROCEDURES

A. Discovery of a Spill

1. Upon discovery of a spill, facility personnel should immediately assess the situation and determine if the spill is considered a "Minor" or "Major" spill. For a spill to be considered "Minor" all the following conditions must be satisfied:

    - ❖ The type of material spilled is known;
    - ❖ The spill is confined to the immediate work area;
    - ❖ The spill has not reached storm drains, sanitary sewer systems, open water, or surrounding soils;
    - ❖ The spill can be safely managed;
    - ❖ The employee can contain and clean up the spill with the PPE that is normally used in the work area;
    - ❖ The spill does not pose a serious threat of fire or an explosion; and
    - ❖ The spill does not pose conditions that are immediately dangerous to life or health.

2. If all the above conditions are met, the spill is considered "Minor". Refer to ***Section B*** of this document for appropriate response actions.

3. If all the above conditions are not met, then the spill is considered "Major". Refer to ***Section C*** of this document for appropriate response actions.

4. If a spill involves flammable liquids, ignitable vapors may be present - precautions must be taken to prevent ignition. Do not turn on or off equipment since sparks may be generated. Additionally, avoid the movement of equipment that could create static electricity. Larger spills of flammable liquids could pose a fire threat and would be considered a "Major" spill. Refer to ***Section C*** for appropriate actions.

B. Response to a "Minor" Spill

1. Identify the source of the spill and the direction in which the spill is heading.

2. Attempt to stop the spill at the source. Where applicable, the source of the spill shall be taken out of service until repairs can be made. If the spill is related to a fuel dispensing system, activate the Emergency Shut-Off (ESO) switch to prevent additional fuel disbursements.

3. If material is released outside a containment area, it is crucial that the material be contained as quickly as possible. Following proper safety procedures, use absorbent materials or diking to contain the spill. Prevent the spill from reaching storm drains, sanitary sewers, or open water. If a spill is flowing toward a drain, install temporary diking around the drain, block off the drain with a drain cover, or place absorbent material around the drain to prevent a discharge.

4. Once the spill has been stopped and contained, estimate the quantity of the spill. Consult applicable Safety Data Sheet (SDS) for material compatibility and environmental precautions. Note and follow recommendations regarding special precautions, spill response equipment, methods, or precautions. All cleanup work shall be conducted in accordance with existing safety protocols and SDS recommendations. Contact the facility Superintendent/Supervisor, or designee, for assistance if needed.

5. Recover or clean up the spilled material as much as possible. Material that cannot be reused must be discarded in accordance with state and federal regulations. Liquids absorbed by porous materials (e.g., wood, gravel, significant quantities of absorbent material, etc.) shall be placed into US DOT-approved 30-gallon or 55-gallon steel drums. Following cleanup, the container shall be secured and appropriately labeled to identify the contents and the date of the spill/cleanup. Containers shall be stored indoors and provided with secondary containment until transported off-site for disposal.

6. For spills that do not involve flammable liquids or other potential hazardous wastes, small quantities of used absorbent materials may be double bagged and disposed of along with municipal trash as long as all liquids have been absorbed (no free liquid may be present).

7. If the spilled material is a flammable liquid, corrosive liquid (pH ≤ 2 or ≥ 12.5), or other potential hazardous waste, all recovered product, impacted material, and used absorbent must be placed into a US DOT-approved containers/drums. Following cleanup, the container(s) shall be secured and appropriately labeled to identify the contents and the date of the spill/cleanup. Containers shall be stored indoors and provided with secondary containment until transported off-site for disposal. The facility Superintendent/ Supervisor, or designee shall be notified that a potential hazardous waste was released and that a waste characterization may be needed to facilitate proper disposal.

8. Surfaces that are contaminated by the spill shall be cleaned utilizing dry absorbent material. Tools and equipment that have been used in the cleanup must be decontaminated immediately after use. Decontamination water (if used) must be minimized, containerized, and disposed of properly.

9. If waste requires disposal, notify the facility Superintendent/Supervisor, or designee who will arrange for the proper characterization and disposal of any waste material. Representative sampling and analysis may be necessary to properly characterize the waste. The waste must be transported and disposed of in compliance with all applicable laws and regulations. Waste manifests, trip tickets, or bills of lading (if required) for waste disposal shall be kept on file.

10. Facility personnel shall restock/replace spill response equipment and absorbent materials used during the clean-up efforts.

11. The facility Superintendent/Supervisor, designee, or other appropriate County personnel shall be notified of the spill in accordance with ***Section D*** of this document.

C. Response to "Major" Spill

A "Major" spill is any discharge that does not meet the definition of a "Minor" spill. Any employee or contractor observing, being involved with, or recognizing a potential or actual spill of oil or other hazardous material, other than a "Minor" spill is responsible for performing the following actions:

1. If there is no danger to human health, attempt to stop and contain the spill at the source. If the spilled material is unknown, if PPE other than that which is typically used in your work area, is necessary to approach the spill area, or if assistance is required to stop the spill, do not attempt to contain the spill. If the spill is related to a fuel dispensing system, activate the Emergency Shut-Off (ESO) switch.

2. Most County employees lack the appropriate training to respond to "Major" spills. If the spill is of an unknown substance, is of a quantity that cannot be safely managed, or poses other risks beyond the training level of the employee, the employee should not attempt to contain or clean up the spill.

3. Evacuate individuals from the area and keep personnel away from the impacted area.

4. Immediately notify the facility Superintendent/Supervisor, or designee of the incident. The notified individual will determine the need for further evacuations and contact emergency response personnel (911), as necessary. *If a situation represents an immediate and grave danger to personnel, the public, structures, or other infrastructure, the individual discovering the incident may call 911 directly without first notifying facility management.*

5. The facility Superintendent/Supervisor or designee will determine if assistance from emergency response contractors is required to clean up the incident and will coordinate such spill response efforts with spill response contractors and other County agencies and first responders.

6. Facility personnel will provide assistance to emergency responders, as appropriate.

D. Reporting a Spill (Internal Notifications)

1. Once a spill is contained and cleanup operations have been initiated, the individual discovering the spill shall notify the appropriate County representatives and provide the following information:

    a) Identify the location, date, and time of the incident;
    b) Identify the type of material spilled or discharged;
    c) Estimate the quantity spilled and the rate of the spill;
    d) Identify the cause of the spill or discharge;
    e) Identify impacted media or infrastructure (soil, storm drains, open water bodies, etc.);
    f) Determine the extent of injuries involved; and
    g) Provide response measures implemented by the facility personnel.

E. Reporting a Spill (Regulatory Notifications)

State of Maryland Reporting Requirements (COMAR 26.10.01.05)

1. Upon discovery of a spill, the Responsible Person shall notify the MDE Emergency Response Division **within two (2) hours** by calling 866-633-4686. The caller shall be prepared to provide the following information:

    a) The time and date of the spill;
    b) The location and cause of the spill;
    c) The mode of transportation or type of facility involved;
    d) Type and quantity of oil spilled;
    e) Details regarding any assistance required;
    f) The name, address, and telephone number of the person making the report; and
    g) Any other pertinent information requested by the Department.

2. MDE will provide further guidance on additional responsibilities.

3. Within **ten (10) working days** of the completed removal and clean-up activities, the Responsible Person shall prepare a report using either County letterhead detailing the incident. The report shall contain the following:

    a) Date, time, and place of the spill;
    b) The amount and type of oil or hazardous substance spilled;
    c) A complete description of circumstances that contributed to the spill;
    d) A complete description of the containment and removal operations performed, including disposal sites to which oil refuse was transported;
    e) Procedures, methods, and precautions instituted to prevent the recurrence of an oil spill from the facility involved;
    f) Any other information considered necessary or required by the MDE for a complete description of the incident; and
    g) A certification that the information provided is true and correct to the knowledge of the person signing the report.

4. The completed report shall be submitted to mdeerd.mema@maryland.gov or faxed to 410-537-3932.

5. A digital copy of the completed report and any accompanying documentation shall be retained

Federal Reporting Requirements - National Response Center (40 CFR 110)

1. If any of the following criteria are met the Responsible Person shall notify the National Response Center (NRC) **within two (2) hours** of the spill discovery by calling 800-424-8802 or 202-426-2675.

    - ❖ The spill has caused a film, sheen, or discoloration of the surface water or shorelines;
    - ❖ The material spilled will violate applicable water quality standards (surface water or groundwater); or
    - ❖ The spill has caused a sludge or emulsion to be deposited beneath the surface of the water or on the shoreline.

2. At a minimum, the following information shall be provided to the NRC:

    a) Name, organization, and telephone number of reporting party;
    b) Name and address of the responsible party;
    c) Date, time, and location of the incident;
    d) Source and cause of the discharge;
    e) Type of material(s) discharged;
    f) Quantity of materials discharged;
    g) Danger or threat posed by discharge;
    h) Number and types of injuries (if any);
    i) Weather conditions at the incident location; and
    j) Other information to help emergency personnel respond to the incident.

3. If unable to report to the NRC, reports can be made to the EPA Regional Office at 800-438-2474 or the U.S. Coast Guard (USCG) at 202-372-1001. The NRC, EPA, or USCG will provide further guidance.

4. A digital record of the NRC notification and any accompanying documentation shall be retained on-site.

Federal Reporting Requirements - EPA Regional Administrator (40 CFR 112.4)

1. If the facility where the spill occurred is regulated under 40 CFR 112 and is required to have a Spill Prevention, Control, and Countermeasures (SPCC) Plan, the Responsible Person shall report the spill to the EPA Region III Administrator when any of the following criteria are met:

   - ❖ More than 1,000 gallons of oil is discharged to navigable waters or adjoining shorelines in a single incident; or
   - ❖ More than 42 gallons of oil is discharged to navigable waters or adjoining shorelines in each of two incidents occurring within any twelve-month period.

2. The report shall be made in writing **within 60 days** of the spill and shall contain:

   a) Name and location of the facility;
   b) Owner/operator name;
   c) Maximum storage/handling capacity of the facility and normal daily throughput;
   d) Corrective actions and countermeasures taken;
   e) Adequate description of the facility including maps, and flow diagrams;
   f) Cause of the discharge to navigable waters, including a failure analysis;
   g) Additional preventative measures taken or planned to minimize discharge reoccurrence; and
   h) Other information required by the EPA Regional III Administrator.

3. The report shall be submitted to the EPA Regional Administrator at the following address:

   EPA Regional Administrator
   US EPA Region 3
   1650 Arch Street (3RA00)
   Philadelphia, PA 19103-2029

4. A copy of the report shall be retained in the facility SPCC Plan.

Appendix D

Training Records

GOOD HOUSEKEEPING PLAN (GHP)
TRAINING ATTENDANCE LOG

FACILITY NAME: _____

DATE	NAME *(PRINT)*	SIGNATURE

By signing I affirm that I have completed the required annual training; and I am aware of and understand my responsibilities under this Plan.

GOOD HOUSEKEEPING PLAN (GHP)

Sheriff's Department Parking Lot
E. Courtland Street & Burns Alley
Bel Air, MD 21015

June 30, 2025

TABLE OF CONTENTS

1.0 BACKGROUND & INTRODUCTION 1
1.1 Objectives 1
1.2 Potential Stormwater Pollutants 1
2.0 RESPONSIBILITIES 3
2.1 GHP Implementation 3
2.2 Plan Review and Modification 3
2.3 Inspections 3
2.3.1 GHP Site Inspections 3
2.3.2 Conveyance System Inspections 4
2.4 Training 4
3.0 BEST MANAGEMENT PRACTICES (BMPs) 5
3.1 Applicability of BMP Fact Sheets 5
3.2 BMP Fact Sheets 5

List of Tables

TABLE 1-1 POTENTIAL STORMWATER POLLUTANTS AND THEIR SOURCES 2

List of BMP Fact Sheets

GH-01 - Waste Management
GH-02 - Vehicle and Equipment Storage
GH-03 - Vehicle/Equipment Refueling
GH-04 - Vehicle Maintenance
GH-05 - Vehicle/Equipment Washing
GH-06 - Material Storage
GH-07 - Aboveground Storage Tanks
GH-08 - Resident Drop-Off Centers
GH-09 - Stockpiles
GH-10 - Deicing Materials

Appendices

Appendix A: GHP Site Inspection Checklist
Appendix B: GHP Stormwater Conveyance Inspection Checklist
Appendix C: General Spill Response Procedures
Appendix D: Training Records

List of Acronyms

AST	-	Aboveground Storage Tank
BMP	-	Best Management Practice
CFR	-	Code of Federal Regulations
GHP	-	Good Housekeeping Plan
MDE	-	Maryland Department of the Environment
MS4	-	Municipal Separate Storm Sewer System
NPDES	-	National Pollutant Discharge Elimination System
SPCC	-	Spill Prevention, Control, and Countermeasure Plan

1.0 BACKGROUND & INTRODUCTION

Polluted stormwater runoff has the potential to enter the County's storm sewer systems (referred to as a municipal separate storm sewer system or MS4), and then discharge, untreated, into local water bodies. To address this potential stormwater pollution, the County is required to obtain a NPDES permit from the Maryland Department of the Environment (MDE). The NPDES Permit requires the County to take actions to prevent stormwater pollution, maintain storm sewer systems, monitor stormwater discharges, and develop and implement comprehensive management programs to minimize the discharge of pollutants from the storm sewer system.

To comply with Part IV.D.4.b of the County's Phase I MS4 Permit, the County must develop, implement, and maintain a Good Housekeeping Plan (GHP) for certain County-owned properties not required to be covered under Maryland's General Permit for Discharges from Stormwater Associated with Industrial Activities *(General Permit 12-SWA / 20-SW).*

To support this effort, a *"Good Housekeeping Plan Applicability Certification"* has been developed to evaluate and document if a specific County-owned facility is subject to the GHP requirements. The *"GHP Applicability Certification"* includes the following ten (10) potential stormwater polluting activities. If any of the covered activities are performed at the facility, then that facility is required to implement a site-specific GHP. The GHP will include each of the potential stormwater polluting activities identified in the *"GHP Applicability Certification"* and corresponding pollution prevention procedures.

- Waste Management
- Vehicle and Equipment Storage
- Vehicle/Equipment Refueling
- Vehicle Maintenance
- Vehicle/Equipment Washing
- Material Storage
- Aboveground Storage Tanks
- Resident Drop-Off Center
- Stockpiles
- Deicing Materials

1.1 Objectives

The GHP was developed to outline suitable practices, procedures, and protocols, or Best Management Practices ("BMPs") for reducing and/or preventing stormwater pollution associated with operations at covered County-owned properties. The intent of the pollution prevention procedures included in the GHP is to limit the release of materials with the potential to impact stormwater, this includes reducing or eliminating (to the extent practical):

- The occurrence of spills and leaks;
- The accidental dumping or release of materials;
- The accumulation of waste, trash, debris, unused parts/equipment, etc.;
- The exposure of hazardous materials to precipitation/run-off;
- Stormwater run-off contamination by improperly stored materials; and/or
- Illicit discharges to the storm drain system.

1.2 Potential Stormwater Pollutants

Table 1-1 on the following page provides a list of common potential pollutants that may result from the GHP-regulated activities identified above. Understanding the sources of these pollutants can help in achieving the goals and objectives of the GHP program.

TABLE 1-1 POTENTIAL STORMWATER POLLUTANTS AND THEIR SOURCES

		Waste Management	Vehicle/Equipment Storage	Vehicle/Equipment Refueling	Vehicle Maintenance	Vehicle/Equipment Washing	Material Storage	Aboveground Storage Tanks	Resident Drop-Off Center	Stockpiles	Deicing Materials
Pollutants	**Sources**	**Associated GHP Activity**									
Sediment	Land disturbance; erosion; paved surfaces; material stockpiles; waste storage; salt/abrasive application	X				X	X		X	X	X
Hydrocarbons *(petroleum compounds)*	Leaking vehicle and equipment; vehicle and equipment cleaning; spills; improper storage; maintenance activities; scrap metal disposal; improper disposal	X	X	X	X	X	X	X	X		
Metals	Vehicle brake and tire wear; vehicle/equipment exhaust; batteries; galvanized metal; paint and wood preservatives; fuels, pesticides, and cleaners; vehicle fueling, maintenance, and washing; industrial waste	X	X	X	X	X	X	X	X		
Toxic Chemicals	Pesticide application; improper chemical storage; leaks and spills from storage containers; leaking vehicles; maintenance activities	X	X		X	X	X	X	X		
Chlorides	De-Icing chemicals										X
Trash/Debris	Improper waste storage and disposal; leaking trash containers; littering; poor housekeeping	X	X				X		X		
Nutrients (nitrogen and Phosphorus)	Fertilizers; malfunctioning septic systems; sewer overflows; animal/pet waste; vehicle washing; decaying grass and leaves; leaking trash containers; atmospheric deposition	X				X	X		X		

2.0 RESPONSIBILITIES

2.1 GHP Implementation

A separate GHP is required for each covered facility. The following individual *(identified by name and/or title)* is accountable for the administration and implementation of the GHP at this facility and has the authority to commit the necessary resources to implement this Plan.

_____

Name and/or Title of Responsible Person

The Responsible Person listed above shall ensure that facility personnel involved in any GHP-covered activities identified in this Plan, are provided with access to, and are familiar with, the contents of this Plan.

2.2 Plan Review and Modification

The *"GHP Applicability Certification"* completed for this facility must be reviewed and updated once every permit term, or within one (1) year of substantial changes to a facility's operations that could reasonably contribute to stormwater pollution. Any newly constructed/acquired facility must be assessed within one (1) year of initiating operations at the facility. The facility's GHP must be amended and reissued to the facility within one (1) year of any changes to the facility's *"GHP Applicability Certification"*.

When warranted, the BMP Fact Sheets provided in Section 3.0 may need to be updated or revised. At the same time, additional BMP Facts Sheets may be added. The need for such updates or modifications will be at the discretion of the County's GHP Program Administrator.

2.3 Inspections

The County's MS4 permit requires each facility covered by a GHP to have the following:

1. Written procedures for annually assessing County properties to prevent the discharge of pollutants, spills, and leaks into the County's storm sewer system; and

2. Written procedure for performing stormwater conveyance system inspections and for removing debris that may cause clogging, backups, and flooding.

To meet these requirements, each facility that is covered by a GHP will be required to complete routine site inspections and stormwater conveyance system inspections as detailed below. Facility management will be responsible for ensuring the necessary inspections are completed within the required timeframes, that corrective actions (if needed) are performed, and that records of inspections and completed corrective actions are maintained for at least five (5) years.

2.3.1 GHP Site Inspections

The GHP Site Inspection will be performed to ensure that each GHP-covered facility is being properly maintained and that there are no visible signs of pollutants entering the stormwater system. GHP facilities shall utilize the *"GHP Site Inspection Checklist"*, provided in ***Appendix A*** to complete the required inspection. At a minimum, each facility is to be inspected every five (5) years.

2.3.2 Conveyance System Inspections

Stormwater conveyance systems are generally comprised of curbs and gutters, catch basins, inlet structures, swales, channels, piping, culverts, detention ponds, outfalls, or other structures that are used to collect, contain, and convey stormwater runoff.

The unimpeded movement of stormwater through conveyance systems is critical in avoiding backups and flooding, which can impede facility operations and damage property. Routine inspections and preventative care of stormwater conveyance systems can ensure these systems function as intended and prevent the need for costly and time-consuming repairs and retrofits.

Each GHP-covered facility is required to conduct routine stormwater conveyance system inspections to ensure the free flow of stormwater within the conveyance systems. GHP-covered facilities shall utilize the *"GHP Stormwater Conveyance System Inspection Checklist"*, provided in ***Appendix B*** to complete the required inspections. At a minimum, facility conveyance system inspections are to be conducted every five (5) years.

2.4 Training

As part of the GHP requirements within the County's Phase I NPDES permit, annual training must be provided to all appropriate staff and contractors. Such training shall be provided to any individuals responsible for implementing the GHP, performing the required inspections, or involved in any of the GHP-covered activities identified in this Plan. The required training shall focus on the duties and responsibilities assigned to site personnel in implementing the GHP and the best management practices (BMPs) prescribed in this Plan for preventing, reducing, and eliminating the discharge of pollutants during facility activities.

The County's MS4/GHP Program Coordinator will be responsible for developing the required training and disseminating it to GHP-covered facilities. Each GHP-covered facility will be responsible for identifying staff/contractors who must attend annual training, ensuring identified staff complete the required training, and maintaining records that document training dates and attendees. Training records and other documentation shall be maintained in ***Appendix D*** of this Plan.

3.0 BEST MANAGEMENT PRACTICES (BMPs)

This section contains a BMP Fact Sheet for each of the ten (10) GHP-regulated activities. The County's operations are not limited to the BMPs contained within this document; nor is the County required to implement all of the pollution prevention measures identified within each BMP Fact Sheet. The County should select and implement those measures that are applicable and have the greatest potential for reducing stormwater pollution.

The BMP Fact Sheets contained within this document offer recommended protocols for a particular activity. These pollution prevention measures are considered non-structural BMPs with a focus on source control of potential pollutants.

3.1 Applicability of BMP Fact Sheets

The *"GHP Applicability Certification"* completed for this facility has identified the activities conducted at this facility that require coverage under this Plan. Each of the BMP Fact Sheets shall be marked as to whether they are applicable or not applicable to this facility. The Applicable/Not Applicable indicator on each BMP Fact Sheet can be revised in response to changes in operations at the facility.

3.2 BMP Fact Sheets

BMP Fact Sheets can be found on the following pages. For the sake of consistency, the general outline of a BMP Fact Sheet will be as follows:

- Identification of GHP-covered activity.
- Applicability of the BMP Fact Sheet to the facility.
- A general description of the concern the activity poses to stormwater.
- Recommended pollution prevention measures for reducing/eliminating stormwater pollution.
- Additional sources of information, if applicable.

WASTE MANAGEMENT

Not Applicable ☒ Applicable ☐

CONCERN

Improperly managed waste can allow trash and debris to be washed into storm drains which poses a concern to water quality, marine life, and public health. It also has the potential to create obstructions in the drainage system, which can lead to backups and flooding. Additionally, improper storage and handling of waste materials can allow pollutants including oils and greases, toxic and chemical compounds (including nutrients), bacteria, metals, and other potentially hazardous wastes to enter waterways.

POLLUTION PREVENTION MEASURES

General *(applicable to all waste management activities)*

1) Provide suitable containers, preferably with working covers, to collect waste materials.
2) Ensure that appropriate waste containers are available in areas where waste is generated.
3) Provide a cover over waste storage areas, if feasible.
4) Avoid positioning waste receptacles near storm drains, water bodies, or areas of concentrated runoff.
5) Ensure that lids to waste containers *(if present)* are kept closed to prevent the intrusion of precipitation and prevent trash from blowing out of the receptacle.
6) For waste receptacles, which do not have lids and could leak, containers should be inspected regularly and controls (e.g., containment, spill response, etc.) shall be enacted whenever leaks or dry-weather discharges are observed.
7) Routinely inspect waste containers, roll-offs, compactors, and other waste receptacles for the presence of excessive waste accumulation and overflowing containers.
8) Ensure that wastes accumulating on the ground are placed in a suitable waste container.
9) Ensure that wastes are removed from the facility regularly by a licensed and contracted vendor.
10) Repair or replace damaged waste container lids.

Trash Compactors

1) Routinely inspect trash compactors for malfunctioning equipment or leaking hydraulic oil and provide the appropriate spill response if leaking equipment is encountered.
2) Regularly inspect compactors for leaking fluids and implement appropriate controls such as spill response/cleanup, collection or diversion of released fluids, providing secondary containment, etc. whenever leaks or dry-weather discharges are observed.

Scrap Metal Collection Containers

1) Avoid placing oily or grease-covered items in uncovered scrap metal recycling collection containers. If needed, wrap oily/greasy items in plastic garbage bags before placing them in the collection container.

Hazardous/Universal Wastes

1) Ensure that hazardous waste and universal wastes (e.g., batteries, bulbs, etc.) are collected and stored indoors or within covered collection containers.
2) Verify that hazardous/universal waste collection containers are in good condition, not leaking, and compatible with the wastes being stored.

Street Sweeping / Vactor Truck Material Storage

1) Do not site storage areas near storm drains, open water bodies, or areas of concentrated runoff.
2) Install sediment control devices (e.g. silt fence, silt socks, hay bales, etc.) around the staging area. Inspect these controls regularly and replace them as needed.
3) Cover the materials staging area, if feasible.
4) Provide oil-absorbent booms if necessary to control oily discharge. Inspect and replace booms regularly.
5) The staging area should be checked periodically for evidence of sediment migrating outside of the staging area. Material that has migrated out of the staging area should be promptly swept and returned to the staging area or disposed of.

Waste Cooking Oil/Grease

1) Maintain storage containers indoors or within a covered location, if feasible.
2) Storage containers shall be secured to prevent infiltration of precipitation and accidental/intentional spills or releases.
3) Carefully transfer waste oil/grease to the appropriate collection container to avoid spills.
4) Maintain suitable spill response equipment near collection containers. Immediately clean up any spilled oil/grease. Keep the exterior of the collection container clean and free of spilled oil/grease.
5) Provide secondary containment for collection containers, if feasible.

VEHICLE AND EQUIPMENT STORAGE

Not Applicable ☒ Applicable ☐

CONCERN

Vehicles and equipment may be stored onsite to support various County operations (e.g., construction, maintenance, snow removal, roadside assistance, mass transit, mowing, etc.). Examples of County owned and operated vehicles and equipment stored onsite at any given time include but are not limited to, the following: cars, trucks, buses, emergency response vehicles, garbage trucks, heavy equipment (backhoes, frontend loaders, etc.), forklifts, towable generators, portable light stands, and roadside equipment. Vehicle and equipment storage is considered a pollutant source due to the potential for incidental releases of petroleum products, lubricants, and various automotive fluids.

POLLUTION PREVENTION MEASURES

1) When possible/practical, store vehicles and equipment inside or under cover to prevent exposure to precipitation.
2) If vehicles or equipment must be stored outside, store vehicles/equipment in designated areas away from areas of concentrated runoff, storm drains, and other stormwater conveyances.
3) Vehicles and equipment shall be staged on impervious (asphalt or concrete) surfaces;
4) Keep truck beds clean and ensure potential stormwater pollutants are stored in closed containers, covered, or otherwise protected from stormwater exposure.
5) Conduct routine visual inspections of vehicles and equipment for the presence of leaks and respond accordingly.
6) Leaking vehicles/equipment should be moved inside or under cover. At a minimum, drip pans or absorbent pads shall be used to contain the leak until the vehicle/equipment can be relocated and the leak addressed.
7) Drain all fluids from wrecked or heavily damaged vehicles and equipment before storage.
8) Have an adequate supply of appropriate spill response equipment readily available and clean up all spills and leaks immediately utilizing dry cleaning techniques (e.g. absorbents and brooms).
9) Train staff in spill response so that incidents are addressed in a timely fashion.
10) Do not wash down areas where leaks have collected on ground surfaces; use dry cleaning methods such as granular absorbents and brooms.

VEHICLE AND EQUIPMENT REFUELING

Not Applicable ☐ Applicable ☒

CONCERN

Refueling activities associated with County vehicles and equipment can result in a discharge of fuel (gasoline and diesel fuel), which has the potential to enter the storm drain system and/or a nearby waterway. Such releases can introduce hydrocarbons, metals, and other toxic chemicals to stormwater runoff.

POLLUTION PREVENTION MEASURES

General Procedures *(applicable to all refueling activities)*

1) Routinely *(at least daily)* inspect the fuel dispensing area for any spills or leaks.
2) Routinely inspect fuel dispensing equipment looking for leaking or damaged equipment. Damaged or malfunctioning equipment shall be taken out of service until it has been repaired.
3) Fuels will only be dispensed into authorized vehicles, equipment, and approved containers.
4) Vehicle operators must remain outside of their vehicles and in attendance of fuel dispensers at all times while dispensing fuel.
5) Third-party contractors must be trained in proper refueling procedures and pollution prevention.
6) Do not utilize a foreign object to keep the dispenser nozzle in the open position. If present, a “hold-open” latch on the nozzle may be used.
7) Do not “top off” a vehicle’s fuel tank once the dispenser nozzle’s automatic shut-off has been activated. Topping off tanks may result in spills. Post signs in fueling areas warning vehicle operators against "topping off" of vehicle fuel tanks.
8) After refueling has stopped, allow several seconds to pass before removing the nozzle and returning it to the dispenser. This will prevent incidental dripping from the nozzle.
9) Employees refueling vehicles shall note the location of the “Emergency Fuel Shut Off” switch, to be used to stop the flow of fuel to the dispensers in the event of a release or emergency.
10) Have an adequate supply of appropriate spill response equipment readily available and clean up all spills immediately utilizing dry cleaning techniques (e.g. absorbents and brooms).
11) Immediately clean up and dispose of used absorbent material.
12) Do not wash down fueling areas; use dry cleaning methods such as granular absorbents and brooms.
13) Conduct refueling activities over impervious (e.g. concrete) surfaces. Place drip pans or absorbent pads under the nozzle if fueling occurs over a permeable surface such as grass or soil.
14) Install oil control devices in storm drains that may receive contaminated runoff from fueling areas.
15) Cover fueling areas with a canopy or roof to prevent direct contact with rainfall. Direct run-on away from fueling areas and collect fueling area run-off in a dead-end sump or oil-water separator.

Mobile Equipment Refueling

1) Refuel equipment on an impervious surface, downgradient of, and at the farthest practical distance from any storm drain, stormwater conveyance, stormwater management feature, or waterway.
2) Utilize secondary containment when refueling equipment (when practical).
3) Ensure mobile refuelers are parked in designated locations and away from areas of concentrated run-off, storm drains, and other stormwater conveyances.
4) Ensure that procedures are in place and that staff is properly trained in spill response/cleanup so that leaks and spills are addressed appropriately and promptly.

VEHICLE MAINTENANCE

GH-04

Not Applicable ☒ Applicable ☐

CONCERN

Vehicle and equipment maintenance can impact the water quality of nearby waterways by exposing stormwater to various pollutants including petroleum hydrocarbons, solvents, antifreeze/coolants, used oil, lubricating oil, grease, brake fluid, metals, and various chemicals. Additionally, vehicles that are wrecked or awaiting repair can be a source of pollution if leaking fluids are not properly controlled.

POLLUTION PREVENTION MEASURES

1) Conduct vehicle and equipment maintenance activities indoors.
2) Make sure incoming vehicles and equipment are inspected for leaking fluids and oil.
3) Move leaking vehicles or equipment indoors or under cover as soon as possible. At a minimum, a drip pan or absorbent pads shall be utilized to contain the leak until the vehicle/equipment can be relocated and the leak addressed.
4) Avoid performing maintenance on vehicles in close proximity to exterior doorways, which may allow released fluids to migrate outdoors.
5) Have an adequate supply of appropriate spill response equipment readily available and clean up all spills and leaks immediately utilizing dry cleaning techniques (e.g. absorbents and brooms).
6) Keep maintenance areas neat and well organized. Remove dirt, debris, and used absorbent regularly.
7) Inspect maintenance areas as well as maintenance equipment on a routine basis.
8) Store vehicles, parts, and generated wastes indoors or off the ground and under cover whenever possible. When practical, provide secondary containment.
9) Promptly transfer used fluids to the proper waste container; do not leave full drip pans or other open containers around the shop. Empty and clean drip pans and containers regularly.
10) Waste liquids shall not be poured into floor drains, sinks, outdoor storm drain inlets, or other storm drains or sewer connections. Liquid wastes are to be collected in properly labeled containers and disposed of by a licensed waste hauler or other appropriate method.
11) Store leaking batteries in a sealed container and provide secondary containment, if feasible.
12) Clean all parts indoors utilizing a self-contained parts washer.
13) Do not hose down indoor service areas to storm drains or areas where it can seep into groundwater.
14) Maintain floor drains in good working order and inspect for proper function on a routine basis. Consider plugging floor drains that discharge to the storm sewer.
15) Ensure oil/water separators (if present) are maintained in proper working order and are checked on a routine basis for the presence of oil.
16) If maintenance work must be performed outdoors, adhere to the following requirements:
    - Conduct maintenance activities over an impervious surface, away from stormwater inlets.
    - Cover outdoor maintenance areas and direct stormwater run-on away from the area.
    - Use drip pans or drop cloths underneath the equipment to catch leaks and drips.
    - Have an adequate supply of appropriate spill response equipment readily available.
    - Clean all spills immediately using dry cleaning techniques (e.g. absorbents and brooms).
    - Avoid performing maintenance activities during precipitation events.
    - Limit temporary outdoor maintenance activities to a single shift/day if additional time is needed to cover the work area at the end of each day/shift.

BMP Fact Sheet

VEHICLE AND EQUIPMENT WASHING

GH-05

Not Applicable ☒ Applicable ☐

CONCERN

Vehicle and equipment washing can generate washwater that contains oil, grease, organic compounds, surfactants, phosphates, metals, and suspended solids. If vehicles/equipment are washed outdoors on impervious surfaces, dirty washwater can contaminate stormwater that ends up in waterways. Washing equipment over pervious surfaces can allow washwater to seep into the ground contaminating groundwater.

POLLUTION PREVENTION MEASURES

1) Vehicle and equipment washing should only be conducted in designated indoor wash bays that capture and recycle washwater to the extent practical.
2) Wastewater from the washing facility should be discharged to the sanitary sewer system under the authorization of a wastewater discharge permit issued by the local municipal authority.
3) The floor of indoor vehicle wash bays should be completely bermed or sloped to collect wash water and prevent migration outdoors.
4) No other activities (e.g., fluid changes, repairs, material storage) shall be performed in wash areas.
5) Keep the wash bay neat and well organized. Sweep or pick up all trash and debris daily or as needed.
6) Solid materials accumulated on vehicles or in vehicle beds (e.g. salt, soil, grass, etc.) shall be knocked off or otherwise removed from the vehicle (while inside the wash bay) prior to washing. Solid materials shall be collected and disposed of properly.
7) For vehicles too large to completely fit in the wash bays, only the portion of the vehicle physically located in the confines of the wash bay shall be cleaned. The vehicle shall then be rotated to allow for the remaining portion of the vehicle to be washed.
8) Use nozzles that automatically turn off water when not in use and consider high-pressure, low-volume sprays.
9) Avoid detergents as much as possible. If detergents are necessary, use a biodegradable, phosphate-free detergent.
10) If discharging to an oil-water separator, use a non-emulsifying detergent.
11) Inspect floor drain systems, holding tanks, and conveyances associated with designated wash areas regularly. Maintain oil/water separators and/or process flowthrough separators on a routine basis.
12) Use commercial car washes when vehicle or equipment washing cannot be performed onsite without causing impacts to stormwater.
13) If washing must occur onsite and outdoors, use a designated impervious area that is marked with posted signs indicating proper washing procedures. This area must be bermed to contain the wash water and graded to direct the wash water to the sanitary sewer, an oil-water separator, a holding tank, a dead-end sump, or other containment area. Captured water shall be disposed of properly.
14) Avoid steam cleaning and engine/undercarriage washing which can produce high pollutant concentrations. If steam cleaning or engine washing is necessary, perform such cleanings within isolated indoor areas, and ensure wash water is treated and discharged to the sanitary sewer (if permitted to do so) or captured for off-site disposal.
15) Train staff in proper washing techniques and how to confine washing to designated wash areas.
16) Consider alternatives to washing such as using air to blow grass and debris from small equipment, wet-wiping equipment with rags, etc.

BMP Fact Sheet

MATERIAL STORAGE

GH-06

Not Applicable ☒ Applicable ☐

CONCERN

The storage of petroleum products, chemicals, paints, cleaners, pesticides, fertilizers, bags of erodible materials like sand, cement, and soil, and other potential pollutants can negatively impact surface waters through the accidental releases or leaching of materials into stormwater. Unprotected outdoor storage areas can generate a wide range of stormwater pollutants, such as sediment, nutrients, toxic materials, and petroleum products.

POLLUTION PREVENTION MEASURES

1) Whenever possible, store containers (e.g. drums, bins, bags, cans, and totes) indoors or under cover to limit exposure to stormwater.
2) Designate specific areas for material delivery and storage that are away from heavy traffic areas, storm drains, stormwater conveyances, and areas of concentrated run-off.
3) Designated outdoor storage areas should be paved or consist of an impervious surface.
4) Provide secondary containment for materials whenever possible or required per regulation.
5) Store materials on pallets to prevent stormwater run-on from coming into contact with materials, prevent container corrosion, and allow for better leak detection. Pallets must be in good condition and promptly replaced once damaged or deteriorated.
6) Stack containers according to the manufacturer's recommendations to avoid damage.
7) Immediately replace damaged, corroded, or leaking containers.
8) Ensure all storage containers are clearly labeled with their contents.
9) Keep containers tightly sealed after use.
10) Maintain an accurate inventory of hazardous substances and limit on-site storage to that which is necessary to support facility operations.
11) Keep storage areas neat and well organized; remove debris and unneeded material promptly.
12) If empty drums are stored outdoors, ensure that all openings are equipped with caps to prevent water intrusion and that the drum/storage area is labeled "Empty Drums".
13) Have an adequate supply of appropriate spill response equipment readily available and clean up all spills and releases immediately utilizing dry cleaning techniques (e.g. sweeping/absorbents).
14) Clean up all migrating dry materials upon discovery and address the source of the release.
15) Provide perimeter controls (e.g., berms, rock check dams, etc.) for erodible stockpiles of materials such as mulch, sand, and gravel to prevent migration into the stormwater system.
16) Routinely inspect material storage areas for leaks, material migration, and damaged or corroded containers. Ensure that secondary containment and other perimeter controls are in satisfactory condition.
17) Additional visual inspections of outdoor storage areas should be conducted after significant rainfall events (i.e., greater than 0.5 inches).

BMP Fact Sheet

ABOVEGROUND STORAGE TANKS

GH-07

Not Applicable ☒ Applicable ☐

CONCERN

Aboveground storage tanks (ASTs) may be used to store fuels, automotive fluids, chemicals, or deicing fluids. Leaks from tanks, piping, or other equipment and releases during fluid transfers can all impact stormwater quality. It is critical to maintain ASTs in good working condition to prevent spills and/or releases from occurring. Improperly managed storage tanks can cause significant environmental impacts.

POLLUTION PREVENTION MEASURES

General *(applicable to all storage tanks)*

1) ASTs should be installed and maintained in accordance with COMAR 26.10 and applicable fire codes.
2) ASTs should be provided with secondary containment, whenever feasible or required by regulation.
3) Secondary containment areas shall be maintained clean and dry; drain valves must be kept closed; accumulated liquid shall only be discharged if there are no visible signs of impacts, and in accordance with applicable regulations.
4) Inspect ASTs monthly to identify any leaking or malfunctioning equipment and ensure tanks are functioning as designed.
5) ASTs shall be equipped with a form of liquid-level detection (i.e. sight gauge, electronic monitoring).
6) ASTs shall be equipped with overfill prevention (i.e. overfill alarm and/or overfill prevention valve).
7) Tanks and piping should be protected from vehicle impact via barriers, bollards, guard rails, etc.
8) Install ASTs on solid foundations over impervious surfaces, and away from areas of concentrated run-off, storm drains, and other stormwater conveyances.
9) Properly label all storage tanks (e.g., contents, capacity, etc.).
10) Keep remote fills and fill port spill buckets clean and dry.
11) Keep fill ports, gates, and tank areas secured when not in use to prevent fuel theft and tampering.
12) Have an adequate supply of appropriate spill response equipment readily available and clean up all spills and leaks immediately utilizing dry cleaning techniques (e.g. absorbents and brooms).
13) Facilities that maintain 1,320 gallons or more of aboveground oil products shall prepare and implement a Spill Prevention, Control, and Countermeasure (SPCC) Plan, per 40 CFR 112.
14) Facilities that maintain 1,000 gallons or more of used oil or 10,000 gallons or more of virgin oil in ASTs shall obtain an Individual Oil Operations Permit from the MDE, per COMAR 26.10.01.09.
15) Owners/Operators of facilities that maintain more than 2,500 gallons of oil in ASTs are required to register each AST with MDE, per COMAR 26.10.01.10.

Bulk Fluid Transfers (Deliveries)

1) All bulk fluid transfer operations shall be performed under the direct supervision of knowledgeable County personnel. At no time shall the delivery vehicle or delivery vehicle operator be unsupervised.
2) The product level within the tank must be measured and available capacity verified before delivery.
3) Deliveries shall be made via fill ports equipped with catch basins to capture drips and spills.
4) Ensure an adequate supply of appropriate spill response equipment is readily available.
5) Post signs in delivery area displaying proper delivery procedures and emergency contact information.

ABOVEGROUND STORAGE TANKS

Used Oil Tanks

1) County personnel must verify the level of product in used oil tanks prior to filling.
2) Used oil tanks should only be filled via designated fill ports. Pumping used oil into the tank via a closed piping system is preferred to manually pouring used oil into the tank.

Brine Tanks

1) If multiple tanks are located onsite, the tanks should be plumbed to ensure that the complete failure of one tank will not drain all the tanks in the system (tanks must be isolated).
2) Minimize seeping and leaking at fittings by properly supporting piping and fittings, using flexible connectors or hoses to reduce stress, and installing corrosion-resistant fittings.
3) Consider placing hoses in non-permeable trenches or using drip-less nozzles to reduce repeated small spills.

RESIDENT DROP-OFF CENTER

Not Applicable ☒ Applicable ☐

CONCERN

Resident Drop-Off Centers are publicly accessible facilities where residents can drop off used automotive fluids (i.e. oil or antifreeze), municipal waste, recyclable, and/or organic waste, typically free of charge. Improper transfer or management of the waste materials can allow a number of pollutants including oils and greases, toxic and chemical compounds, nutrients, metals, and other wastes to enter waterways.

POLLUTION PREVENTION MEASURES

General *(applicable to all materials collected)*

1) Clearly identify waste materials accepted by the facility, and clearly mark designated collection areas.
2) Waste material should be inspected by a County representative, prior to disposal.
3) Avoid positioning waste receptacles near storm drains, water bodies, or areas of concentrated runoff.
4) When practical, receiving areas should be covered.
5) Do not allow containers to overflow or waste materials to accumulate on the ground.

Automotive Fluid Collection

1) Used oil, antifreeze, and automotive fluid receiving areas should be on impervious surfaces, covered, and provided with secondary containment, which shall be maintained clean and dry.
2) Provide lidded waste receptacles in the receiving area for the public to dispose of empty containers. Waste receptacles shall be emptied routinely and waste disposed of properly.
3) Collection areas shall be inspected daily and all trash and spilled liquids appropriately cleaned up.
4) The available capacity of waste liquid collection containers shall be routinely verified and waste removals scheduled, as needed.
5) Install appropriate controls to prohibit the overfilling of waste fluid collection containers.
6) Place appropriate spill response equipment in close proximity to drop-off areas.
7) If aboveground tanks are used to collect waste fluids, refer to BMP Fact Sheet GHP-07 (Aboveground Storage Tanks) for additional recommendations.

Organic Debris Collection

1) Routinely transfer collected organic debris/waste to a composting or disposal facility.
2) Do not permit composting of organic waste except at properly designed and permitted facilities.
3) Enact controls to prevent leaves and other windblown debris from entering stormwater inlets.

Municipal Waste / Recyclables Collection

1) Refer to BMP Fact Sheet GHP-01 (Waste Management) for additional recommendations.

BMP Fact Sheet

STOCKPILES

GH-09

Not Applicable ☒ Applicable ☐

CONCERN

The County may stockpile various erodible materials, the type of material can vary depending on the needs of the County. Stockpiled material may include soil, sand, millings, slag, cinders, sawdust, landscaping bark, compost, etc. Exposed stockpiles can easily erode due to wind or precipitation and contribute suspended solids to stormwater runoff.

POLLUTION PREVENTION MEASURES

1) Maintain stockpiles of erodible materials within roofed storage buildings or covered storage bins, if feasible. If not, stockpile material on an impervious surface and cover the stockpile.
2) Temporary stockpiles should be placed on an impermeable membrane (tarp) for quick clean-up.
3) Locate stockpiles away from drain inlets, catch basins, swales, areas of concentrated stormwater flow, water bodies, and environmentally sensitive areas.
4) Divert stormwater flows away from/around the stockpiles using a diversion device (e.g., temporary swale, berm, sandbags, or diversion fence).
5) Cover temporary stockpiles of erodible materials with a tarp that has been adequately secured. The covers must be in place at all times when the stockpile is not in active use.
6) When accessing a portion of the stockpile, only remove a section of the cover to minimize exposure to the elements.
7) Use barriers to isolate stockpiled materials from high-traffic areas to prevent tracking of materials.
8) Sweep (do not wash or hose down) in front of material stockpile storage areas at regular intervals, following loading and unloading activities, and during times of heavy use.
9) If material is observed migrating from the stockpile, clean up all migrated material upon discovery and provide additional controls to reduce migration from the stockpile. If such measures are ineffective implement controls to capture pollutants before they migrate off-site (e.g. silt fencing, inlet filters, filter socks, at-grade inlet protection, etc.).
10) Minimize material stockpile inventory based on historical inventory/usage records and public safety operational needs.
11) Cold mix asphalt shall be stored on and covered with plastic sheeting or comparable material.
12) Routinely inspect outdoor material stockpiles to verify existing controls are functioning properly and for signs of erosion or material transport.

BMP Fact Sheet

DEICING MATERIALS

GH-10

Not Applicable ☒ Applicable ☐

CONCERN

When salt and other de-icing materials are stored outside and uncovered, they have a much higher risk of being eroded and transported offsite by stormwater. Improper de-icing material and sand storage may result in stormwater runoff containing elevated concentrations of sodium chloride and dissolved solids. Sodium chloride (e.g., road salt) is an effective deicer but can be highly corrosive to stormwater facilities. Smaller waterways are at a higher risk to increases in salinity, which can threaten aquatic species. Additionally, runoff containing sodium chloride has the potential to reach drinking water sources where small traces can adversely impact public health.

POLLUTION PREVENTION MEASURES

1) Bagged de-icing chemicals must be stored indoors. If stored outdoors bags must be kept on pallets (off the ground) and covered at all times. Bags must be intact without holes or openings.
2) Bulk de-icing materials shall be stored under cover and on an impervious surface.
3) Bulk salt storage areas/buildings shall not be overfilled so that salt spills out beyond the entrance of the storage area/building.
4) Bulk salt storage areas/buildings shall be maintained in a structurally sound condition and in a way that prevents the release of salt and the infiltration of stormwater. Deicing materials should not touch the sides of metal storage containers.
5) Barriers such as berms, gates, knee walls, tarps, and/or straw bales shall be placed at the entrances of bulk salt storage areas/buildings to prohibit the migration of salt and prevent contact with precipitation/stormwater runoff.
6) Routinely inspect storage areas for migrating materials or deterioration of containment structures. Sweep up all migrating materials upon discovery and repair the source of the migrating pollutant.
7) Loading areas should be constructed of impervious material and covered or enclosed, to the extent practical, to reduce potential contact with stormwater.
8) Minimize the distance de-icing materials are transported during loading/unloading activities.
9) Prevent and/or minimize the spillage of salt and de-icing materials during loading/unloading activities, immediately clean spilled or tracked materials.
10) Sweeping of storage and loading/unloading areas shall be conducted immediately following loading/unloading activities.
11) Do not store de-icing materials (bulk or bagged) over or immediately adjacent to drains or waterways.
12) Control site drainage by diverting stormwater run-on away from storage/loading areas using appropriate measures (e.g., curbing, berms, etc.).
13) Slope storage/loading areas to direct salt-contaminated runoff to an appropriate collection area, and in a manner that prevents the runoff from reaching adjacent soil or surface waters.
14) Excess salt shall be removed from salt handling equipment (trucks, spreaders, etc.) following use/prior to storage. All cleaning shall occur on an impervious surface, which is sloped or curbed to contain any washwater and direct it to a collection area for recycling or proper disposal.

Appendix A

GHP Site Inspection Checklist

GOOD HOUSEKEEPING PLAN (GHP)
SITE INSPECTION CHECKLIST

Facility Name: _____ **Inspection Date:** _____

Inspector Name: _____ **Inspector Signature:** _____

- The intent of this inspection is to ensure that the site is being properly maintained and that there are no visible signs of pollutants entering the stormwater system.
- **A shaded status box designates an item in a non-compliant status. Please provide an explanation for all non-compliant items and subsequently document all corrective actions performed.**
- Retain the completed checklists for five (5) years.

Item	Status			CORRECTIVE ACTIONS/COMMENTS *Items which cannot be corrected immediately must be reported to the GHP/NPDES Program Manager*
	Yes	No	N/A	
GENERAL HOUSEKEEPING				
1. Are exterior areas of the facility free of accumulated trash, debris, and unneeded materials?				
2. Are stormwater drains and inlets free from debris, sediment, and evidence of spills/releases?				
3. Is the facility free from signs of erosion?				
4. Are paved surfaces free of accumulated sediment?				
5. Is spill response equipment available in maintenance areas, fueling areas, hazardous material storage areas, and/or other required areas?				
6. Are spill kits and absorbent materials clearly labeled and accessible (i.e. items are not piled on top of or in front of spill kits)?				
7. Are spill kits secured from being stolen or misused?				
8. Is there a labeled container present for the disposal of used spill cleanup material?				

GOOD HOUSEKEEPING PLAN (GHP)
SITE INSPECTION CHECKLIST

Item	Status			CORRECTIVE ACTIONS/COMMENTS *Items which cannot be corrected immediately must be reported to the GHP/NPDES Program Manager*
	Yes	No	N/A	
9. Does spill response equipment (i.e. spill kits, absorbent materials) need to be replenished?				
WASTE MANAGEMENT				
10. Are areas around solid waste containers/roll-offs/compactors free of excessive trash accumulation or overflowing containers?				
11. Are areas around solid waste containers/roll-offs/compactors free of visible evidence (i.e. leaks, staining) of ongoing stormwater pollution?				
12. Are scrap metal containers in good order and free from evidence of leaking oil/grease?				
13. For dumpsters, roll-offs, and other waste receptacles, where leaks are observed, have appropriate controls (e.g. containment, spill response, etc.) been enacted?				
14. Are the lids (if present) to solid waste containers closed?				
15. Is street sweeping/vactor waste being managed appropriately (i.e. no evidence of material migration)?				
16. Is waste cooking grease managed appropriately (i.e. no evidence of spilled material or excessive staining)?				
VEHICLE & EQUIPMENT STORAGE				
17. Are stored vehicles/equipment free from leaks?				
18. If leaks are present, are they being managed appropriately (drip pan or other methods in place to capture released liquids)?				
19. Are storage areas free of visible evidence of chronic leaks/spills (i.e. significant staining)?				

GOOD HOUSEKEEPING PLAN (GHP)
SITE INSPECTION CHECKLIST

Item	Status			CORRECTIVE ACTIONS/COMMENTS *Items which cannot be corrected immediately must be reported to the GHP/NPDES Program Manager*
	Yes	No	N/A	
VEHICLE & EQUIPMENT REFUELING				
20. Are the areas around refueling areas free from evidence of spills or leaks?				
21. Are refueling areas free of used absorbent material that has not been swept/cleaned up?				
22. Do fuel dispensers and hoses appear to be in good working order and well-maintained?				
VEHICLE MAINTENANCE				
23. Is there any indication that vehicle maintenance activities are being conducted outdoors?				
24. Is there any indication that vehicle maintenance activities are contributing to stormwater pollution?				
VEHICLE & EQUIPMENT WASHING				
25. If performed on-site, does all vehicle/equipment washing occur indoors?				
26. Is wash water collected and disposed of properly?				
27. Is there any indication that vehicle/equipment wash water is being released to stormwater conveyances or pervious areas?				
MATERIAL STORAGE				
28. Are all outdoor storage areas free from visible signs of leaks or spilled material?				
29. Are material storage containers in good condition?				

GOOD HOUSEKEEPING PLAN (GHP)
SITE INSPECTION CHECKLIST

Item	Status			CORRECTIVE ACTIONS/COMMENTS *Items which cannot be corrected immediately must be reported to the GHP/NPDES Program Manager*
	Yes	No	N/A	
30. Are drums, totes, and other containers (that are <u>not</u> empty) stored off the ground and covered, or stored indoors?				
31. Are liquid-containing drums/totes located outdoors provided with secondary containment?				
32. Are containers that are located outdoors equipped with closed lids except when material transfers are occurring?				
33. Are materials, which could impact stormwater, stored away from heavy traffic areas, or protected from vehicle collisions?				
34. Are chemical storage containers properly labeled?				
35. If empty drums are stored outside, are all openings equipped with caps to prevent water intrusion?				
ABOVEGROUND STORAGE TANKS				
36. Are all storage tanks, and surrounding areas free from visible signs of leaks or spilled material?				
37. Do storage tanks appear to be in good working order (e.g. free of obvious signs of damage or malfunctioning equipment)?				
38. Are remote fills associated with tanks free of liquid and debris?				
RESIDENT DROP-OFF CENTERS				
39. Are waste collection areas clearly identified?				
40. Are used oil/antifreeze collection tanks, containment structures, and surrounding areas free from visible signs of leaks or spilled material?				

GOOD HOUSEKEEPING PLAN (GHP)
SITE INSPECTION CHECKLIST

Item	Status			CORRECTIVE ACTIONS/COMMENTS *Items which cannot be corrected immediately must be reported to the GHP/NPDES Program Manager*
	Yes	No	N/A	
41. Do used oil/antifreeze collection tanks appear to be in good working order (e.g. free of obvious signs of damage or malfunctioning equipment)?				
42. Are empty used oil/antifreeze containers being collected and disposed of in the trash?				
43. Are areas around waste/recyclables containers free of excessive trash accumulation or overflowing containers?				
44. Are areas around waste/recyclables containers free of visible evidence (i.e. leaks, staining) of ongoing stormwater pollution?				
45. Are organic debris collection areas free of visible evidence of ongoing stormwater pollution (e.g. leaves and debris in stormwater conveyances)?				
STOCKPILES				
46. Are material piles, including salt, soil, sand, and millings isolated (i.e. covered, bermed, etc.) to prevent stormwater run-on and run-off?				
47. Are areas surrounding material piles (e.g. salt, soil, sand, millings, etc.) free of tracked or migrated material?				
DEICING MATERIALS				
48. Are all deicing materials stored indoors or undercover?				
49. Are salt storage structures in good condition (e.g. no evidence of material escaping or stormwater infiltration)?				
50. Is the salt loading area clean?				

GOOD HOUSEKEEPING PLAN (GHP)
SITE INSPECTION CHECKLIST

Item	Status			CORRECTIVE ACTIONS/COMMENTS *Items which cannot be corrected immediately must be reported to the GHP/NPDES Program Manager*
	Yes	No	N/A	
51. If deicing materials are tarped, is the tarp secure and covering the entire pile?				
52. Are bags of salt stored indoors, or off the ground and covered?				

ADDITIONAL COMMENTS:

Appendix B

GHP Stormwater Conveyance System Inspection Checklist

GOOD HOUSEKEEPING PLAN (GHP)
STORMWATER CONVEYANCE SYSTEM INSPECTION CHECKLIST

Facility Name: _____ **Inspection Date:** _____

Inspector Name: _____ **Inspector Signature:** _____

- The intent of this inspection is to ensure the free flow of stormwater within on-site conveyance systems and prevent damage/flooding.
- **If maintenance is needed, please provide an explanation, and document all corrective actions performed.**
- **Inspections shall include visually accessible infrastructure only; at no time shall inspection personnel enter a confined space.**
- Retain the completed checklists for five (5) years.

Item	Item Checked (Y/N/NA)	Maintenance Needed (Y/N)	CORRECTIVE ACTIONS/COMMENTS *Items which cannot be corrected immediately must be reported to the GHP/NPDES Program Manager*
CATCH BASINS / INLETS			
1. Look for debris and sediment blocking catch basin grates. If found, remove.			
2. Look for damage or cracks to the frame, grate, basin walls or bottom. If found, schedule repairs or replacement.			
3. Look for sediment and debris in the catch basin sump. If sediment fills 60% of the sump or comes within 6” of a pipe it should be scheduled for cleaning.			
4. If any type of filtering device is present, verify that the filter is not clogged, torn, or damaged; clean if clogged, replace if damaged.			
PIPES / CULVERTS			
5. Look for evidence of clogged piping (e.g. visual obstructions, standing water within manholes/inlets structures, etc.). If found, remove or schedule cleaning.			
6. Verify vegetation growth, if present, does not impede water flow. If it does, mow, cut back, or remove.			

GOOD HOUSEKEEPING PLAN (GHP)

STORMWATER CONVEYANCE SYSTEM INSPECTION CHECKLIST

Item	Item Checked (Y/N/NA)	Maintenance Needed (Y/N)	CORRECTIVE ACTIONS/COMMENTS *Items which cannot be corrected immediately must be reported to the GHP/NPDES Program Manager*
7. Inspect for damaged piping, inlets, outlets, headwalls, wingwalls, or excessive erosion. If found, make or schedule repairs.			
DITCHES / TRAPEZOIDAL SWALES			
8. Check for erosion, slumping, or undercutting. If found, make or schedule repairs.			
9. Look for trash and sediment accumulation. Remove all trash and remove sediment if it will impede water flow or clog downstream structures.			
10. Verify vegetation growth does not impede water flow. If it does, mow, cut back, or remove. Remove any trees or shrubs growing within the ditch.			
11. Check the integrity of check dams, filter socks, or other flow dissipation/filtering devices within the ditch or swale. Perform or schedule service if they are clogged, damaged, or deteriorated.			
12. Check inlets and outlets for debris accumulation, damage, or erosion. If found, make or schedule repairs.			

ADDITIONAL COMMENTS:

GUIDANCE DOCUMENT
GOOD HOUSEKEEPING PLAN - STORMWATER CONVEYANCE INSPECTIONS

INTRODUCTION

Maintaining catch basins, stormwater inlets, and other stormwater conveyance structures on a regular basis will remove pollutants, prevent backups, and ensure the system functions as intended to avoid flooding.

Each GHP-covered facility is required to conduct routine stormwater conveyance system inspections to ensure the free flow of stormwater within the conveyance system(s). The GHP includes a *"GHP Stormwater Conveyance System Inspection Checklist"*, to be used when completing the required inspections. This document provides additional background and guidance to aid facility personnel in completing the inspections.

CATCH BASINS / INLETS

Catch basins and inlets are all points for stormwater to enter storm drain systems. These structures are typically part of a larger conveyance system with many interconnected components where the impairment of one component can compromise the functionality of the larger system. Inlets and catch basins are subject to functional impairment by a variety of conditions, including:

- Structural damage including from vehicles and plows
- Cracks/joint separation at piping (inlet and outlet) connections
- Leaking due to cracks and joint separation
- Missing or damaged grates and grate frames
- Corrosion
- Blockage caused by debris, sediment, vegetation, or other objects

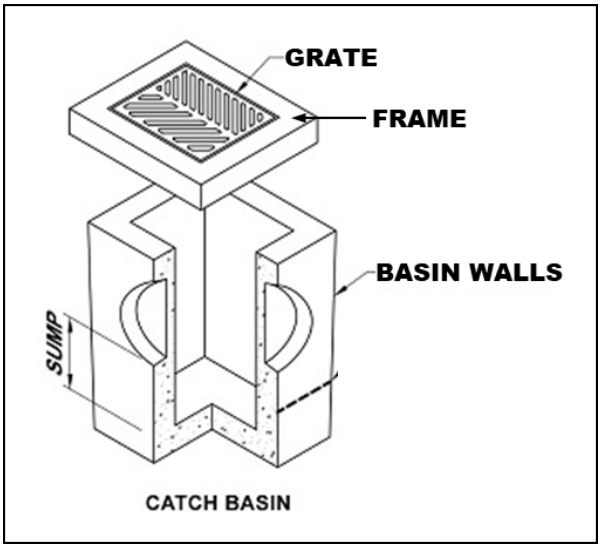

Figure 1 – Catch Basin Diagram

The following photos provide additional information related to the various inspection items, including examples of typical issues that may be encountered. The photo numbers correspond to the inspection checklist item number.

Inspection Item #1 [1]



Debris and sediment blocking inlet/catch basin grate.

Inspection Item #2 [2]



Damaged Grate

Inspection Item #2 [3]



Damaged Frame

Inspection Item #2 [4]



Failing brick walls with a stormwater inlet.

Inspection Item #2 [5]



Failing asphalt surrounding the inlet

[1] Grand Valley State University - https://www.gvsu.edu/groundswell/clogged-storm-drains-71.htm
[2] Georgia Department of Transportation – Stormwater System Inspection and Maintenance Manual, March 2020
[3] https://catchbasinauthority.ca/catch-basin-101/
[4] https://www.fixasphalt.com/catch-basin-repairs
[5] https://ccpia.org/catch-basin-and-manhole-inspections/

Inspection Item #3 [6]



Sediment and debris inside stormwater inlet

Inspection Item #3

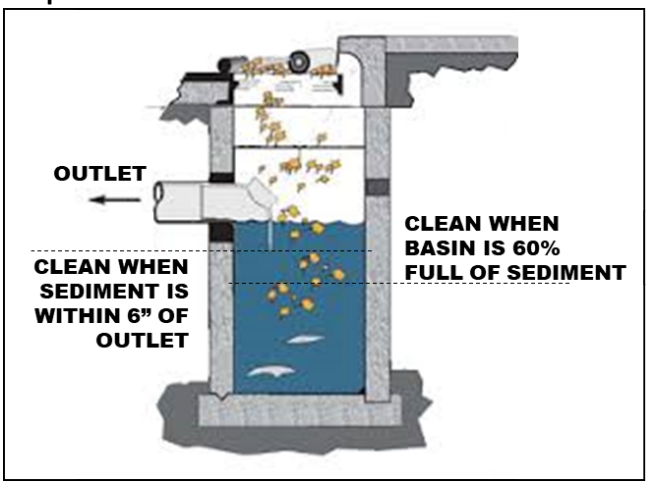

Remove sediment from a catch basin if it fills 60% of the sump or comes within 6" of a pipe.

Inspection Item #4 [7]



Example of inlet filter. Replace when filled or damaged. damaged.

Inspection Item #4 [8]



Example of an inlet filter sock, replace if

PIPES AND CULVERTS

Pipe systems are designed to convey stormwater runoff safely and effectively from inlets to various discharge points and outfalls. A culvert is a structure that channels water under an obstacle such as a roadway or railroad. These structures are subject to functional impairment by a variety of conditions, including:

- Blockage or obstruction due to build up of vegetation, debris, sediment, or other objects
- Cracks and/or joint separation
- Collapsed pipe
- Corrosion
- Root intrusion
- Lack of stabilization

[6] https://www.fixasphalt.com/catch-basin-repairs
[7] https://store.interstateproducts.com/products/Ultra-Drain-Guards/Ultra-Drain-Guard-Adjustable-Frame-Model
[8] https://www.newpig.com/pig-sediment-filter-sock/p/FLT787

Inspection Item #5 [9]



A pipe filled with sediment, inhibiting flow.

Inspection Item #5 [10]



Standing water around an inlet may indicate a blockage.

Inspection Item #6 [11]



Pipe conveyance filled with vegetation.

Inspection Item #7 [12]

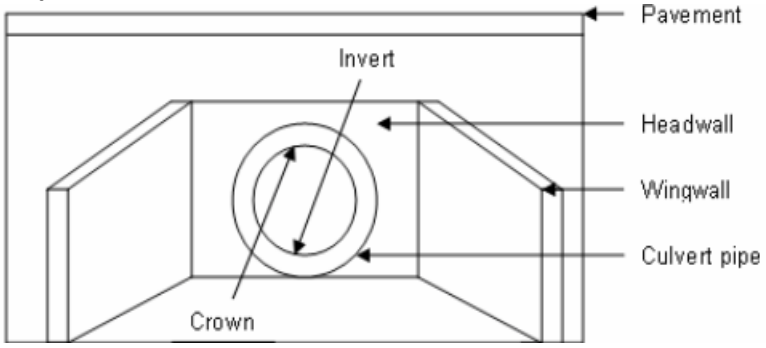

Diagram depicting various components of a culvert.

[9] Georgia Department of Transportation – Stormwater System Inspection and Maintenance Manual, March 2020
[10] https://www3.epa.gov/region9/water/npdes/stormwater-feature.html
[11] Georgia Department of Transportation – Stormwater System Inspection and Maintenance Manual, March 2020
[12] https://www.researchgate.net/figure/Components-of-a-Culvert_fig34_228685906

Inspection Item #7 [13]



A crack is the culvert headwall.

Inspection Item #7 [14]



Evidence of erosion around a culvert.

DITCHES AND SWALES

Ditches and swales serve similar functions. Both are used to convey stormwater. However, there are slight differences. A ditch is a narrow channel typically found along roads and at the edges of parking lots/driveways. A swale is like a ditch, but it is broad and shallow, and usually covered or lined with turfgrass or stone. Issues associated with these structures, which could impede their function include:

- Blockage or obstruction due to vegetation, debris, sediment, or other objects
- Erosion
- Rapidly moving water
- Lack of adequate vegetative cover for grass-lined channels

Inspection Item #8 [15]



Erosion and slumping within a drainage ditch.

Inspection Item #8 [16]



Slumping within a drainage swale.

[13] https://www.sbt-durabi.org/articles/xml/ARN0/
[14] https://lufkindailynews.com/news/local/culverts-crumbling-in-precinct-1/article_a9fed902-4379-5248-ab11-7471e2974298.html
[15] https://graniteseed.com/blog/how-to-stop-a-ditch-from-eroding/
[16] https://www.mnwcd.org/erosion-control

Inspection Item #9 [17]



Litter and debris within a ditch.

Inspection Item #9 [18]



Litter and debris within a swale.

Inspection Item #10 [19]



Cracks and joint separation in concrete channels, removal of vegetation may prevent future damage.

Inspection Item #11 [20]



Rock check dam across a channel.

Inspection Item #11 [21]



Filter sock check dams across a grass swale.

[17] https://craven.ces.ncsu.edu/2023/02/for-those-who-love-to-litter/
[18] https://www.cityoftulsa.org/government/departments/public-works/stormwater-quality/adopt-a-stream/
[19] Georgia Department of Transportation – Stormwater System Inspection and Maintenance Manual, March 2020
[20] EPA Stormwater Best Management Practice, Check Dams, December 2021
[21] EPA Stormwater Best Management Practice, Check Dams, December 2021

Inspection Item #12 [22]



Inlet to a rock-lined swale.

Inspection Item #12 [23]



Sediment accumulation at swale inlet.

END OF DOCUMENT

[22] https://www.stormwater.com/erosion-control/vegetation-management/article/13016118/inlet-protection-during-constructionand-after

[23] https://www.stormwater.com/erosion-control/vegetation-management/article/13016118/inlet-protection-during-constructionand-after

Appendix C

General Spill Response Procedures

SPILL RESPONSE AND NOTIFICATION PROCEDURES

A. Discovery of a Spill

1. Upon discovery of a spill, facility personnel should immediately assess the situation and determine if the spill is considered a "Minor" or "Major" spill. For a spill to be considered "Minor" all the following conditions must be satisfied:

    - ❖ The type of material spilled is known;
    - ❖ The spill is confined to the immediate work area;
    - ❖ The spill has not reached storm drains, sanitary sewer systems, open water, or surrounding soils;
    - ❖ The spill can be safely managed;
    - ❖ The employee can contain and clean up the spill with the PPE that is normally used in the work area;
    - ❖ The spill does not pose a serious threat of fire or an explosion; and
    - ❖ The spill does not pose conditions that are immediately dangerous to life or health.

2. If all the above conditions are met, the spill is considered "Minor". Refer to ***Section B*** of this document for appropriate response actions.

3. If all the above conditions are not met, then the spill is considered "Major". Refer to ***Section C*** of this document for appropriate response actions.

4. If a spill involves flammable liquids, ignitable vapors may be present - precautions must be taken to prevent ignition. Do not turn on or off equipment since sparks may be generated. Additionally, avoid the movement of equipment that could create static electricity. Larger spills of flammable liquids could pose a fire threat and would be considered a "Major" spill. Refer to ***Section C*** for appropriate actions.

B. Response to a "Minor" Spill

1. Identify the source of the spill and the direction in which the spill is heading.

2. Attempt to stop the spill at the source. Where applicable, the source of the spill shall be taken out of service until repairs can be made. If the spill is related to a fuel dispensing system, activate the Emergency Shut-Off (ESO) switch to prevent additional fuel disbursements.

3. If material is released outside a containment area, it is crucial that the material be contained as quickly as possible. Following proper safety procedures, use absorbent materials or diking to contain the spill. Prevent the spill from reaching storm drains, sanitary sewers, or open water. If a spill is flowing toward a drain, install temporary diking around the drain, block off the drain with a drain cover, or place absorbent material around the drain to prevent a discharge.

4. Once the spill has been stopped and contained, estimate the quantity of the spill. Consult applicable Safety Data Sheet (SDS) for material compatibility and environmental precautions. Note and follow recommendations regarding special precautions, spill response equipment, methods, or precautions. All cleanup work shall be conducted in accordance with existing safety protocols and SDS recommendations. Contact the facility Superintendent/Supervisor, or designee, for assistance if needed.

5. Recover or clean up the spilled material as much as possible. Material that cannot be reused must be discarded in accordance with state and federal regulations. Liquids absorbed by porous materials (e.g., wood, gravel, significant quantities of absorbent material, etc.) shall be placed into US DOT-approved 30-gallon or 55-gallon steel drums. Following cleanup, the container shall be secured and appropriately labeled to identify the contents and the date of the spill/cleanup. Containers shall be stored indoors and provided with secondary containment until transported off-site for disposal.

6. For spills that do not involve flammable liquids or other potential hazardous wastes, small quantities of used absorbent materials may be double bagged and disposed of along with municipal trash as long as all liquids have been absorbed (no free liquid may be present).

7. If the spilled material is a flammable liquid, corrosive liquid (pH ≤ 2 or ≥ 12.5), or other potential hazardous waste, all recovered product, impacted material, and used absorbent must be placed into a US DOT-approved containers/drums. Following cleanup, the container(s) shall be secured and appropriately labeled to identify the contents and the date of the spill/cleanup. Containers shall be stored indoors and provided with secondary containment until transported off-site for disposal. The facility Superintendent/ Supervisor, or designee shall be notified that a potential hazardous waste was released and that a waste characterization may be needed to facilitate proper disposal.

8. Surfaces that are contaminated by the spill shall be cleaned utilizing dry absorbent material. Tools and equipment that have been used in the cleanup must be decontaminated immediately after use. Decontamination water (if used) must be minimized, containerized, and disposed of properly.

9. If waste requires disposal, notify the facility Superintendent/Supervisor, or designee who will arrange for the proper characterization and disposal of any waste material. Representative sampling and analysis may be necessary to properly characterize the waste. The waste must be transported and disposed of in compliance with all applicable laws and regulations. Waste manifests, trip tickets, or bills of lading (if required) for waste disposal shall be kept on file.

10. Facility personnel shall restock/replace spill response equipment and absorbent materials used during the clean-up efforts.

11. The facility Superintendent/Supervisor, designee, or other appropriate County personnel shall be notified of the spill in accordance with ***Section D*** of this document.

C. Response to "Major" Spill

A "Major" spill is any discharge that does not meet the definition of a "Minor" spill. Any employee or contractor observing, being involved with, or recognizing a potential or actual spill of oil or other hazardous material, other than a "Minor" spill is responsible for performing the following actions:

1. If there is no danger to human health, attempt to stop and contain the spill at the source. If the spilled material is unknown, if PPE other than that which is typically used in your work area, is necessary to approach the spill area, or if assistance is required to stop the spill, do not attempt to contain the spill. If the spill is related to a fuel dispensing system, activate the Emergency Shut-Off (ESO) switch.

2. Most County employees lack the appropriate training to respond to "Major" spills. If the spill is of an unknown substance, is of a quantity that cannot be safely managed, or poses other risks beyond the training level of the employee, the employee should not attempt to contain or clean up the spill.

3. Evacuate individuals from the area and keep personnel away from the impacted area.

4. Immediately notify the facility Superintendent/Supervisor, or designee of the incident. The notified individual will determine the need for further evacuations and contact emergency response personnel (911), as necessary. *If a situation represents an immediate and grave danger to personnel, the public, structures, or other infrastructure, the individual discovering the incident may call 911 directly without first notifying facility management.*

5. The facility Superintendent/Supervisor or designee will determine if assistance from emergency response contractors is required to clean up the incident and will coordinate such spill response efforts with spill response contractors and other County agencies and first responders.

6. Facility personnel will provide assistance to emergency responders, as appropriate.

D. Reporting a Spill (Internal Notifications)

1. Once a spill is contained and cleanup operations have been initiated, the individual discovering the spill shall notify the appropriate County representatives and provide the following information:

    a) Identify the location, date, and time of the incident;
    b) Identify the type of material spilled or discharged;
    c) Estimate the quantity spilled and the rate of the spill;
    d) Identify the cause of the spill or discharge;
    e) Identify impacted media or infrastructure (soil, storm drains, open water bodies, etc.);
    f) Determine the extent of injuries involved; and
    g) Provide response measures implemented by the facility personnel.

E. Reporting a Spill (Regulatory Notifications)

State of Maryland Reporting Requirements (COMAR 26.10.01.05)

1. Upon discovery of a spill, the Responsible Person shall notify the MDE Emergency Response Division **within two (2) hours** by calling 866-633-4686. The caller shall be prepared to provide the following information:

    a) The time and date of the spill;
    b) The location and cause of the spill;
    c) The mode of transportation or type of facility involved;
    d) Type and quantity of oil spilled;
    e) Details regarding any assistance required;
    f) The name, address, and telephone number of the person making the report; and
    g) Any other pertinent information requested by the Department.

2. MDE will provide further guidance on additional responsibilities.

3. Within **ten (10) working days** of the completed removal and clean-up activities, the Responsible Person shall prepare a report using either County letterhead detailing the incident. The report shall contain the following:

    a) Date, time, and place of the spill;
    b) The amount and type of oil or hazardous substance spilled;
    c) A complete description of circumstances that contributed to the spill;
    d) A complete description of the containment and removal operations performed, including disposal sites to which oil refuse was transported;
    e) Procedures, methods, and precautions instituted to prevent the recurrence of an oil spill from the facility involved;
    f) Any other information considered necessary or required by the MDE for a complete description of the incident; and
    g) A certification that the information provided is true and correct to the knowledge of the person signing the report.

4. The completed report shall be submitted to mdeerd.mema@maryland.gov or faxed to 410-537-3932.

5. A digital copy of the completed report and any accompanying documentation shall be retained

Federal Reporting Requirements - National Response Center (40 CFR 110)

1. If any of the following criteria are met the Responsible Person shall notify the National Response Center (NRC) **within two (2) hours** of the spill discovery by calling 800-424-8802 or 202-426-2675.

    - ❖ The spill has caused a film, sheen, or discoloration of the surface water or shorelines;
    - ❖ The material spilled will violate applicable water quality standards (surface water or groundwater); or
    - ❖ The spill has caused a sludge or emulsion to be deposited beneath the surface of the water or on the shoreline.

2. At a minimum, the following information shall be provided to the NRC:

    a) Name, organization, and telephone number of reporting party;
    b) Name and address of the responsible party;
    c) Date, time, and location of the incident;
    d) Source and cause of the discharge;
    e) Type of material(s) discharged;
    f) Quantity of materials discharged;
    g) Danger or threat posed by discharge;
    h) Number and types of injuries (if any);
    i) Weather conditions at the incident location; and
    j) Other information to help emergency personnel respond to the incident.

3. If unable to report to the NRC, reports can be made to the EPA Regional Office at 800-438-2474 or the U.S. Coast Guard (USCG) at 202-372-1001. The NRC, EPA, or USCG will provide further guidance.

4. A digital record of the NRC notification and any accompanying documentation shall be retained on-site.

Federal Reporting Requirements - EPA Regional Administrator (40 CFR 112.4)

1. If the facility where the spill occurred is regulated under 40 CFR 112 and is required to have a Spill Prevention, Control, and Countermeasures (SPCC) Plan, the Responsible Person shall report the spill to the EPA Region III Administrator when any of the following criteria are met:

   - ❖ More than 1,000 gallons of oil is discharged to navigable waters or adjoining shorelines in a single incident; or
   - ❖ More than 42 gallons of oil is discharged to navigable waters or adjoining shorelines in each of two incidents occurring within any twelve-month period.

2. The report shall be made in writing **within 60 days** of the spill and shall contain:

   a) Name and location of the facility;
   b) Owner/operator name;
   c) Maximum storage/handling capacity of the facility and normal daily throughput;
   d) Corrective actions and countermeasures taken;
   e) Adequate description of the facility including maps, and flow diagrams;
   f) Cause of the discharge to navigable waters, including a failure analysis;
   g) Additional preventative measures taken or planned to minimize discharge reoccurrence; and
   h) Other information required by the EPA Regional III Administrator.

3. The report shall be submitted to the EPA Regional Administrator at the following address:

   EPA Regional Administrator
   US EPA Region 3
   1650 Arch Street (3RA00)
   Philadelphia, PA 19103-2029

4. A copy of the report shall be retained in the facility SPCC Plan.

Appendix D

Training Records

GOOD HOUSEKEEPING PLAN (GHP)
TRAINING ATTENDANCE LOG

FACILITY NAME: _____

DATE	NAME *(PRINT)*	SIGNATURE

By signing I affirm that I have completed the required annual training; and I am aware of and understand my responsibilities under this Plan.

GOOD HOUSEKEEPING PLAN (GHP)

Sheriff's Office – Southern Precinct
1305 Pulaski Highway
Edgewood, MD 21040

June 30, 2025

TABLE OF CONTENTS

1.0 BACKGROUND & INTRODUCTION 1
1.1 Objectives 1
1.2 Potential Stormwater Pollutants 1
2.0 RESPONSIBILITIES 3
2.1 GHP Implementation 3
2.2 Plan Review and Modification 3
2.3 Inspections 3
2.3.1 GHP Site Inspections 3
2.3.2 Conveyance System Inspections 4
2.4 Training 4
3.0 BEST MANAGEMENT PRACTICES (BMPs) 5
3.1 Applicability of BMP Fact Sheets 5
3.2 BMP Fact Sheets 5

List of Tables

TABLE 1-1 POTENTIAL STORMWATER POLLUTANTS AND THEIR SOURCES 2

List of BMP Fact Sheets

GH-01 - Waste Management
GH-02 - Vehicle and Equipment Storage
GH-03 - Vehicle/Equipment Refueling
GH-04 - Vehicle Maintenance
GH-05 - Vehicle/Equipment Washing
GH-06 - Material Storage
GH-07 - Aboveground Storage Tanks
GH-08 - Resident Drop-Off Centers
GH-09 - Stockpiles
GH-10 - Deicing Materials

Appendices

Appendix A: GHP Site Inspection Checklist
Appendix B: GHP Stormwater Conveyance Inspection Checklist
Appendix C: General Spill Response Procedures
Appendix D: Training Records

List of Acronyms

AST	-	Aboveground Storage Tank
BMP	-	Best Management Practice
CFR	-	Code of Federal Regulations
GHP	-	Good Housekeeping Plan
MDE	-	Maryland Department of the Environment
MS4	-	Municipal Separate Storm Sewer System
NPDES	-	National Pollutant Discharge Elimination System
SPCC	-	Spill Prevention, Control, and Countermeasure Plan

1.0 BACKGROUND & INTRODUCTION

Polluted stormwater runoff has the potential to enter the County's storm sewer systems (referred to as a municipal separate storm sewer system or MS4), and then discharge, untreated, into local water bodies. To address this potential stormwater pollution, the County is required to obtain a NPDES permit from the Maryland Department of the Environment (MDE). The NPDES Permit requires the County to take actions to prevent stormwater pollution, maintain storm sewer systems, monitor stormwater discharges, and develop and implement comprehensive management programs to minimize the discharge of pollutants from the storm sewer system.

To comply with Part IV.D.4.b of the County's Phase I MS4 Permit, the County must develop, implement, and maintain a Good Housekeeping Plan (GHP) for certain County-owned properties not required to be covered under Maryland's General Permit for Discharges from Stormwater Associated with Industrial Activities *(General Permit 12-SWA / 20-SW).*

To support this effort, a *"Good Housekeeping Plan Applicability Certification"* has been developed to evaluate and document if a specific County-owned facility is subject to the GHP requirements. The *"GHP Applicability Certification"* includes the following ten (10) potential stormwater polluting activities. If any of the covered activities are performed at the facility, then that facility is required to implement a site-specific GHP. The GHP will include each of the potential stormwater polluting activities identified in the *"GHP Applicability Certification"* and corresponding pollution prevention procedures.

- Waste Management
- Vehicle and Equipment Storage
- Vehicle/Equipment Refueling
- Vehicle Maintenance
- Vehicle/Equipment Washing
- Material Storage
- Aboveground Storage Tanks
- Resident Drop-Off Center
- Stockpiles
- Deicing Materials

1.1 Objectives

The GHP was developed to outline suitable practices, procedures, and protocols, or Best Management Practices ("BMPs") for reducing and/or preventing stormwater pollution associated with operations at covered County-owned properties. The intent of the pollution prevention procedures included in the GHP is to limit the release of materials with the potential to impact stormwater, this includes reducing or eliminating (to the extent practical):

- The occurrence of spills and leaks;
- The accidental dumping or release of materials;
- The accumulation of waste, trash, debris, unused parts/equipment, etc.;
- The exposure of hazardous materials to precipitation/run-off;
- Stormwater run-off contamination by improperly stored materials; and/or
- Illicit discharges to the storm drain system.

1.2 Potential Stormwater Pollutants

Table 1-1 on the following page provides a list of common potential pollutants that may result from the GHP-regulated activities identified above. Understanding the sources of these pollutants can help in achieving the goals and objectives of the GHP program.

TABLE 1-1 POTENTIAL STORMWATER POLLUTANTS AND THEIR SOURCES

		Waste Management	Vehicle/Equipment Storage	Vehicle/Equipment Refueling	Vehicle Maintenance	Vehicle/Equipment Washing	Material Storage	Aboveground Storage Tanks	Resident Drop-Off Center	Stockpiles	Deicing Materials
Pollutants	**Sources**	**Associated GHP Activity**									
Sediment	Land disturbance; erosion; paved surfaces; material stockpiles; waste storage; salt/abrasive application	X				X	X		X	X	X
Hydrocarbons *(petroleum compounds)*	Leaking vehicle and equipment; vehicle and equipment cleaning; spills; improper storage; maintenance activities; scrap metal disposal; improper disposal	X	X	X	X	X	X	X	X		
Metals	Vehicle brake and tire wear; vehicle/equipment exhaust; batteries; galvanized metal; paint and wood preservatives; fuels, pesticides, and cleaners; vehicle fueling, maintenance, and washing; industrial waste	X	X	X	X	X	X	X	X		
Toxic Chemicals	Pesticide application; improper chemical storage; leaks and spills from storage containers; leaking vehicles; maintenance activities	X	X		X	X	X	X	X		
Chlorides	De-Icing chemicals										X
Trash/Debris	Improper waste storage and disposal; leaking trash containers; littering; poor housekeeping	X	X				X		X		
Nutrients (nitrogen and Phosphorus)	Fertilizers; malfunctioning septic systems; sewer overflows; animal/pet waste; vehicle washing; decaying grass and leaves; leaking trash containers; atmospheric deposition	X				X	X		X		

2.0 RESPONSIBILITIES

2.1 GHP Implementation

A separate GHP is required for each covered facility. The following individual *(identified by name and/or title)* is accountable for the administration and implementation of the GHP at this facility and has the authority to commit the necessary resources to implement this Plan.

_____

Name and/or Title of Responsible Person

The Responsible Person listed above shall ensure that facility personnel involved in any GHP-covered activities identified in this Plan, are provided with access to, and are familiar with, the contents of this Plan.

2.2 Plan Review and Modification

The *"GHP Applicability Certification"* completed for this facility must be reviewed and updated once every permit term, or within one (1) year of substantial changes to a facility's operations that could reasonably contribute to stormwater pollution. Any newly constructed/acquired facility must be assessed within one (1) year of initiating operations at the facility. The facility's GHP must be amended and reissued to the facility within one (1) year of any changes to the facility's *"GHP Applicability Certification"*.

When warranted, the BMP Fact Sheets provided in Section 3.0 may need to be updated or revised. At the same time, additional BMP Facts Sheets may be added. The need for such updates or modifications will be at the discretion of the County's GHP Program Administrator.

2.3 Inspections

The County's MS4 permit requires each facility covered by a GHP to have the following:

1. Written procedures for annually assessing County properties to prevent the discharge of pollutants, spills, and leaks into the County's storm sewer system; and

2. Written procedure for performing stormwater conveyance system inspections and for removing debris that may cause clogging, backups, and flooding.

To meet these requirements, each facility that is covered by a GHP will be required to complete routine site inspections and stormwater conveyance system inspections as detailed below. Facility management will be responsible for ensuring the necessary inspections are completed within the required timeframes, that corrective actions (if needed) are performed, and that records of inspections and completed corrective actions are maintained for at least five (5) years.

2.3.1 GHP Site Inspections

The GHP Site Inspection will be performed to ensure that each GHP-covered facility is being properly maintained and that there are no visible signs of pollutants entering the stormwater system. GHP facilities shall utilize the *"GHP Site Inspection Checklist"*, provided in ***Appendix A*** to complete the required inspection. At a minimum, each facility is to be inspected every five (5) years.

2.3.2 Conveyance System Inspections

Stormwater conveyance systems are generally comprised of curbs and gutters, catch basins, inlet structures, swales, channels, piping, culverts, detention ponds, outfalls, or other structures that are used to collect, contain, and convey stormwater runoff.

The unimpeded movement of stormwater through conveyance systems is critical in avoiding backups and flooding, which can impede facility operations and damage property. Routine inspections and preventative care of stormwater conveyance systems can ensure these systems function as intended and prevent the need for costly and time-consuming repairs and retrofits.

Each GHP-covered facility is required to conduct routine stormwater conveyance system inspections to ensure the free flow of stormwater within the conveyance systems. GHP-covered facilities shall utilize the *"GHP Stormwater Conveyance System Inspection Checklist"*, provided in ***Appendix B*** to complete the required inspections. At a minimum, facility conveyance system inspections are to be conducted every five (5) years.

2.4 Training

As part of the GHP requirements within the County's Phase I NPDES permit, annual training must be provided to all appropriate staff and contractors. Such training shall be provided to any individuals responsible for implementing the GHP, performing the required inspections, or involved in any of the GHP-covered activities identified in this Plan. The required training shall focus on the duties and responsibilities assigned to site personnel in implementing the GHP and the best management practices (BMPs) prescribed in this Plan for preventing, reducing, and eliminating the discharge of pollutants during facility activities.

The County's MS4/GHP Program Coordinator will be responsible for developing the required training and disseminating it to GHP-covered facilities. Each GHP-covered facility will be responsible for identifying staff/contractors who must attend annual training, ensuring identified staff complete the required training, and maintaining records that document training dates and attendees. Training records and other documentation shall be maintained in ***Appendix D*** of this Plan.

3.0 BEST MANAGEMENT PRACTICES (BMPs)

This section contains a BMP Fact Sheet for each of the ten (10) GHP-regulated activities. The County's operations are not limited to the BMPs contained within this document; nor is the County required to implement all of the pollution prevention measures identified within each BMP Fact Sheet. The County should select and implement those measures that are applicable and have the greatest potential for reducing stormwater pollution.

The BMP Fact Sheets contained within this document offer recommended protocols for a particular activity. These pollution prevention measures are considered non-structural BMPs with a focus on source control of potential pollutants.

3.1 Applicability of BMP Fact Sheets

The *"GHP Applicability Certification"* completed for this facility has identified the activities conducted at this facility that require coverage under this Plan. Each of the BMP Fact Sheets shall be marked as to whether they are applicable or not applicable to this facility. The Applicable/Not Applicable indicator on each BMP Fact Sheet can be revised in response to changes in operations at the facility.

3.2 BMP Fact Sheets

BMP Fact Sheets can be found on the following pages. For the sake of consistency, the general outline of a BMP Fact Sheet will be as follows:

- Identification of GHP-covered activity.
- Applicability of the BMP Fact Sheet to the facility.
- A general description of the concern the activity poses to stormwater.
- Recommended pollution prevention measures for reducing/eliminating stormwater pollution.
- Additional sources of information, if applicable.

WASTE MANAGEMENT

Not Applicable ☒ Applicable ☐

CONCERN

Improperly managed waste can allow trash and debris to be washed into storm drains which poses a concern to water quality, marine life, and public health. It also has the potential to create obstructions in the drainage system, which can lead to backups and flooding. Additionally, improper storage and handling of waste materials can allow pollutants including oils and greases, toxic and chemical compounds (including nutrients), bacteria, metals, and other potentially hazardous wastes to enter waterways.

POLLUTION PREVENTION MEASURES

General *(applicable to all waste management activities)*

1) Provide suitable containers, preferably with working covers, to collect waste materials.
2) Ensure that appropriate waste containers are available in areas where waste is generated.
3) Provide a cover over waste storage areas, if feasible.
4) Avoid positioning waste receptacles near storm drains, water bodies, or areas of concentrated runoff.
5) Ensure that lids to waste containers *(if present)* are kept closed to prevent the intrusion of precipitation and prevent trash from blowing out of the receptacle.
6) For waste receptacles, which do not have lids and could leak, containers should be inspected regularly and controls (e.g., containment, spill response, etc.) shall be enacted whenever leaks or dry-weather discharges are observed.
7) Routinely inspect waste containers, roll-offs, compactors, and other waste receptacles for the presence of excessive waste accumulation and overflowing containers.
8) Ensure that wastes accumulating on the ground are placed in a suitable waste container.
9) Ensure that wastes are removed from the facility regularly by a licensed and contracted vendor.
10) Repair or replace damaged waste container lids.

Trash Compactors

1) Routinely inspect trash compactors for malfunctioning equipment or leaking hydraulic oil and provide the appropriate spill response if leaking equipment is encountered.
2) Regularly inspect compactors for leaking fluids and implement appropriate controls such as spill response/cleanup, collection or diversion of released fluids, providing secondary containment, etc. whenever leaks or dry-weather discharges are observed.

Scrap Metal Collection Containers

1) Avoid placing oily or grease-covered items in uncovered scrap metal recycling collection containers. If needed, wrap oily/greasy items in plastic garbage bags before placing them in the collection container.

Hazardous/Universal Wastes

1) Ensure that hazardous waste and universal wastes (e.g., batteries, bulbs, etc.) are collected and stored indoors or within covered collection containers.
2) Verify that hazardous/universal waste collection containers are in good condition, not leaking, and compatible with the wastes being stored.

Street Sweeping / Vactor Truck Material Storage

1) Do not site storage areas near storm drains, open water bodies, or areas of concentrated runoff.
2) Install sediment control devices (e.g. silt fence, silt socks, hay bales, etc.) around the staging area. Inspect these controls regularly and replace them as needed.
3) Cover the materials staging area, if feasible.
4) Provide oil-absorbent booms if necessary to control oily discharge. Inspect and replace booms regularly.
5) The staging area should be checked periodically for evidence of sediment migrating outside of the staging area. Material that has migrated out of the staging area should be promptly swept and returned to the staging area or disposed of.

Waste Cooking Oil/Grease

1) Maintain storage containers indoors or within a covered location, if feasible.
2) Storage containers shall be secured to prevent infiltration of precipitation and accidental/intentional spills or releases.
3) Carefully transfer waste oil/grease to the appropriate collection container to avoid spills.
4) Maintain suitable spill response equipment near collection containers. Immediately clean up any spilled oil/grease. Keep the exterior of the collection container clean and free of spilled oil/grease.
5) Provide secondary containment for collection containers, if feasible.

VEHICLE AND EQUIPMENT STORAGE

Not Applicable ☐ Applicable ☒

CONCERN

Vehicles and equipment may be stored onsite to support various County operations (e.g., construction, maintenance, snow removal, roadside assistance, mass transit, mowing, etc.). Examples of County owned and operated vehicles and equipment stored onsite at any given time include but are not limited to, the following: cars, trucks, buses, emergency response vehicles, garbage trucks, heavy equipment (backhoes, frontend loaders, etc.), forklifts, towable generators, portable light stands, and roadside equipment. Vehicle and equipment storage is considered a pollutant source due to the potential for incidental releases of petroleum products, lubricants, and various automotive fluids.

POLLUTION PREVENTION MEASURES

1) When possible/practical, store vehicles and equipment inside or under cover to prevent exposure to precipitation.
2) If vehicles or equipment must be stored outside, store vehicles/equipment in designated areas away from areas of concentrated runoff, storm drains, and other stormwater conveyances.
3) Vehicles and equipment shall be staged on impervious (asphalt or concrete) surfaces;
4) Keep truck beds clean and ensure potential stormwater pollutants are stored in closed containers, covered, or otherwise protected from stormwater exposure.
5) Conduct routine visual inspections of vehicles and equipment for the presence of leaks and respond accordingly.
6) Leaking vehicles/equipment should be moved inside or under cover. At a minimum, drip pans or absorbent pads shall be used to contain the leak until the vehicle/equipment can be relocated and the leak addressed.
7) Drain all fluids from wrecked or heavily damaged vehicles and equipment before storage.
8) Have an adequate supply of appropriate spill response equipment readily available and clean up all spills and leaks immediately utilizing dry cleaning techniques (e.g. absorbents and brooms).
9) Train staff in spill response so that incidents are addressed in a timely fashion.
10) Do not wash down areas where leaks have collected on ground surfaces; use dry cleaning methods such as granular absorbents and brooms.

VEHICLE AND EQUIPMENT REFUELING

Not Applicable ☒ Applicable ☐

CONCERN

Refueling activities associated with County vehicles and equipment can result in a discharge of fuel (gasoline and diesel fuel), which has the potential to enter the storm drain system and/or a nearby waterway. Such releases can introduce hydrocarbons, metals, and other toxic chemicals to stormwater runoff.

POLLUTION PREVENTION MEASURES

General Procedures *(applicable to all refueling activities)*

1) Routinely *(at least daily)* inspect the fuel dispensing area for any spills or leaks.
2) Routinely inspect fuel dispensing equipment looking for leaking or damaged equipment. Damaged or malfunctioning equipment shall be taken out of service until it has been repaired.
3) Fuels will only be dispensed into authorized vehicles, equipment, and approved containers.
4) Vehicle operators must remain outside of their vehicles and in attendance of fuel dispensers at all times while dispensing fuel.
5) Third-party contractors must be trained in proper refueling procedures and pollution prevention.
6) Do not utilize a foreign object to keep the dispenser nozzle in the open position. If present, a “hold-open” latch on the nozzle may be used.
7) Do not “top off” a vehicle’s fuel tank once the dispenser nozzle’s automatic shut-off has been activated. Topping off tanks may result in spills. Post signs in fueling areas warning vehicle operators against "topping off" of vehicle fuel tanks.
8) After refueling has stopped, allow several seconds to pass before removing the nozzle and returning it to the dispenser. This will prevent incidental dripping from the nozzle.
9) Employees refueling vehicles shall note the location of the “Emergency Fuel Shut Off” switch, to be used to stop the flow of fuel to the dispensers in the event of a release or emergency.
10) Have an adequate supply of appropriate spill response equipment readily available and clean up all spills immediately utilizing dry cleaning techniques (e.g. absorbents and brooms).
11) Immediately clean up and dispose of used absorbent material.
12) Do not wash down fueling areas; use dry cleaning methods such as granular absorbents and brooms.
13) Conduct refueling activities over impervious (e.g. concrete) surfaces. Place drip pans or absorbent pads under the nozzle if fueling occurs over a permeable surface such as grass or soil.
14) Install oil control devices in storm drains that may receive contaminated runoff from fueling areas.
15) Cover fueling areas with a canopy or roof to prevent direct contact with rainfall. Direct run-on away from fueling areas and collect fueling area run-off in a dead-end sump or oil-water separator.

Mobile Equipment Refueling

1) Refuel equipment on an impervious surface, downgradient of, and at the farthest practical distance from any storm drain, stormwater conveyance, stormwater management feature, or waterway.
2) Utilize secondary containment when refueling equipment (when practical).
3) Ensure mobile refuelers are parked in designated locations and away from areas of concentrated run-off, storm drains, and other stormwater conveyances.
4) Ensure that procedures are in place and that staff is properly trained in spill response/cleanup so that leaks and spills are addressed appropriately and promptly.

VEHICLE MAINTENANCE

GH-04

Not Applicable ☒ Applicable ☐

CONCERN

Vehicle and equipment maintenance can impact the water quality of nearby waterways by exposing stormwater to various pollutants including petroleum hydrocarbons, solvents, antifreeze/coolants, used oil, lubricating oil, grease, brake fluid, metals, and various chemicals. Additionally, vehicles that are wrecked or awaiting repair can be a source of pollution if leaking fluids are not properly controlled.

POLLUTION PREVENTION MEASURES

1) Conduct vehicle and equipment maintenance activities indoors.
2) Make sure incoming vehicles and equipment are inspected for leaking fluids and oil.
3) Move leaking vehicles or equipment indoors or under cover as soon as possible. At a minimum, a drip pan or absorbent pads shall be utilized to contain the leak until the vehicle/equipment can be relocated and the leak addressed.
4) Avoid performing maintenance on vehicles in close proximity to exterior doorways, which may allow released fluids to migrate outdoors.
5) Have an adequate supply of appropriate spill response equipment readily available and clean up all spills and leaks immediately utilizing dry cleaning techniques (e.g. absorbents and brooms).
6) Keep maintenance areas neat and well organized. Remove dirt, debris, and used absorbent regularly.
7) Inspect maintenance areas as well as maintenance equipment on a routine basis.
8) Store vehicles, parts, and generated wastes indoors or off the ground and under cover whenever possible. When practical, provide secondary containment.
9) Promptly transfer used fluids to the proper waste container; do not leave full drip pans or other open containers around the shop. Empty and clean drip pans and containers regularly.
10) Waste liquids shall not be poured into floor drains, sinks, outdoor storm drain inlets, or other storm drains or sewer connections. Liquid wastes are to be collected in properly labeled containers and disposed of by a licensed waste hauler or other appropriate method.
11) Store leaking batteries in a sealed container and provide secondary containment, if feasible.
12) Clean all parts indoors utilizing a self-contained parts washer.
13) Do not hose down indoor service areas to storm drains or areas where it can seep into groundwater.
14) Maintain floor drains in good working order and inspect for proper function on a routine basis. Consider plugging floor drains that discharge to the storm sewer.
15) Ensure oil/water separators (if present) are maintained in proper working order and are checked on a routine basis for the presence of oil.
16) If maintenance work must be performed outdoors, adhere to the following requirements:
    - Conduct maintenance activities over an impervious surface, away from stormwater inlets.
    - Cover outdoor maintenance areas and direct stormwater run-on away from the area.
    - Use drip pans or drop cloths underneath the equipment to catch leaks and drips.
    - Have an adequate supply of appropriate spill response equipment readily available.
    - Clean all spills immediately using dry cleaning techniques (e.g. absorbents and brooms).
    - Avoid performing maintenance activities during precipitation events.
    - Limit temporary outdoor maintenance activities to a single shift/day if additional time is needed to cover the work area at the end of each day/shift.

BMP Fact Sheet

VEHICLE AND EQUIPMENT WASHING

GH-05

Not Applicable ☒ Applicable ☐

CONCERN

Vehicle and equipment washing can generate washwater that contains oil, grease, organic compounds, surfactants, phosphates, metals, and suspended solids. If vehicles/equipment are washed outdoors on impervious surfaces, dirty washwater can contaminate stormwater that ends up in waterways. Washing equipment over pervious surfaces can allow washwater to seep into the ground contaminating groundwater.

POLLUTION PREVENTION MEASURES

1) Vehicle and equipment washing should only be conducted in designated indoor wash bays that capture and recycle washwater to the extent practical.
2) Wastewater from the washing facility should be discharged to the sanitary sewer system under the authorization of a wastewater discharge permit issued by the local municipal authority.
3) The floor of indoor vehicle wash bays should be completely bermed or sloped to collect wash water and prevent migration outdoors.
4) No other activities (e.g., fluid changes, repairs, material storage) shall be performed in wash areas.
5) Keep the wash bay neat and well organized. Sweep or pick up all trash and debris daily or as needed.
6) Solid materials accumulated on vehicles or in vehicle beds (e.g. salt, soil, grass, etc.) shall be knocked off or otherwise removed from the vehicle (while inside the wash bay) prior to washing. Solid materials shall be collected and disposed of properly.
7) For vehicles too large to completely fit in the wash bays, only the portion of the vehicle physically located in the confines of the wash bay shall be cleaned. The vehicle shall then be rotated to allow for the remaining portion of the vehicle to be washed.
8) Use nozzles that automatically turn off water when not in use and consider high-pressure, low-volume sprays.
9) Avoid detergents as much as possible. If detergents are necessary, use a biodegradable, phosphate-free detergent.
10) If discharging to an oil-water separator, use a non-emulsifying detergent.
11) Inspect floor drain systems, holding tanks, and conveyances associated with designated wash areas regularly. Maintain oil/water separators and/or process flowthrough separators on a routine basis.
12) Use commercial car washes when vehicle or equipment washing cannot be performed onsite without causing impacts to stormwater.
13) If washing must occur onsite and outdoors, use a designated impervious area that is marked with posted signs indicating proper washing procedures. This area must be bermed to contain the wash water and graded to direct the wash water to the sanitary sewer, an oil-water separator, a holding tank, a dead-end sump, or other containment area. Captured water shall be disposed of properly.
14) Avoid steam cleaning and engine/undercarriage washing which can produce high pollutant concentrations. If steam cleaning or engine washing is necessary, perform such cleanings within isolated indoor areas, and ensure wash water is treated and discharged to the sanitary sewer (if permitted to do so) or captured for off-site disposal.
15) Train staff in proper washing techniques and how to confine washing to designated wash areas.
16) Consider alternatives to washing such as using air to blow grass and debris from small equipment, wet-wiping equipment with rags, etc.

BMP Fact Sheet

MATERIAL STORAGE

GH-06

Not Applicable ☒ Applicable ☐

CONCERN

The storage of petroleum products, chemicals, paints, cleaners, pesticides, fertilizers, bags of erodible materials like sand, cement, and soil, and other potential pollutants can negatively impact surface waters through the accidental releases or leaching of materials into stormwater. Unprotected outdoor storage areas can generate a wide range of stormwater pollutants, such as sediment, nutrients, toxic materials, and petroleum products.

POLLUTION PREVENTION MEASURES

1) Whenever possible, store containers (e.g. drums, bins, bags, cans, and totes) indoors or under cover to limit exposure to stormwater.
2) Designate specific areas for material delivery and storage that are away from heavy traffic areas, storm drains, stormwater conveyances, and areas of concentrated run-off.
3) Designated outdoor storage areas should be paved or consist of an impervious surface.
4) Provide secondary containment for materials whenever possible or required per regulation.
5) Store materials on pallets to prevent stormwater run-on from coming into contact with materials, prevent container corrosion, and allow for better leak detection. Pallets must be in good condition and promptly replaced once damaged or deteriorated.
6) Stack containers according to the manufacturer's recommendations to avoid damage.
7) Immediately replace damaged, corroded, or leaking containers.
8) Ensure all storage containers are clearly labeled with their contents.
9) Keep containers tightly sealed after use.
10) Maintain an accurate inventory of hazardous substances and limit on-site storage to that which is necessary to support facility operations.
11) Keep storage areas neat and well organized; remove debris and unneeded material promptly.
12) If empty drums are stored outdoors, ensure that all openings are equipped with caps to prevent water intrusion and that the drum/storage area is labeled "Empty Drums".
13) Have an adequate supply of appropriate spill response equipment readily available and clean up all spills and releases immediately utilizing dry cleaning techniques (e.g. sweeping/absorbents).
14) Clean up all migrating dry materials upon discovery and address the source of the release.
15) Provide perimeter controls (e.g., berms, rock check dams, etc.) for erodible stockpiles of materials such as mulch, sand, and gravel to prevent migration into the stormwater system.
16) Routinely inspect material storage areas for leaks, material migration, and damaged or corroded containers. Ensure that secondary containment and other perimeter controls are in satisfactory condition.
17) Additional visual inspections of outdoor storage areas should be conducted after significant rainfall events (i.e., greater than 0.5 inches).

BMP Fact Sheet

ABOVEGROUND STORAGE TANKS

GH-07

Not Applicable ☒ Applicable ☐

CONCERN

Aboveground storage tanks (ASTs) may be used to store fuels, automotive fluids, chemicals, or deicing fluids. Leaks from tanks, piping, or other equipment and releases during fluid transfers can all impact stormwater quality. It is critical to maintain ASTs in good working condition to prevent spills and/or releases from occurring. Improperly managed storage tanks can cause significant environmental impacts.

POLLUTION PREVENTION MEASURES

General *(applicable to all storage tanks)*

1) ASTs should be installed and maintained in accordance with COMAR 26.10 and applicable fire codes.
2) ASTs should be provided with secondary containment, whenever feasible or required by regulation.
3) Secondary containment areas shall be maintained clean and dry; drain valves must be kept closed; accumulated liquid shall only be discharged if there are no visible signs of impacts, and in accordance with applicable regulations.
4) Inspect ASTs monthly to identify any leaking or malfunctioning equipment and ensure tanks are functioning as designed.
5) ASTs shall be equipped with a form of liquid-level detection (i.e. sight gauge, electronic monitoring).
6) ASTs shall be equipped with overfill prevention (i.e. overfill alarm and/or overfill prevention valve).
7) Tanks and piping should be protected from vehicle impact via barriers, bollards, guard rails, etc.
8) Install ASTs on solid foundations over impervious surfaces, and away from areas of concentrated run-off, storm drains, and other stormwater conveyances.
9) Properly label all storage tanks (e.g., contents, capacity, etc.).
10) Keep remote fills and fill port spill buckets clean and dry.
11) Keep fill ports, gates, and tank areas secured when not in use to prevent fuel theft and tampering.
12) Have an adequate supply of appropriate spill response equipment readily available and clean up all spills and leaks immediately utilizing dry cleaning techniques (e.g. absorbents and brooms).
13) Facilities that maintain 1,320 gallons or more of aboveground oil products shall prepare and implement a Spill Prevention, Control, and Countermeasure (SPCC) Plan, per 40 CFR 112.
14) Facilities that maintain 1,000 gallons or more of used oil or 10,000 gallons or more of virgin oil in ASTs shall obtain an Individual Oil Operations Permit from the MDE, per COMAR 26.10.01.09.
15) Owners/Operators of facilities that maintain more than 2,500 gallons of oil in ASTs are required to register each AST with MDE, per COMAR 26.10.01.10.

Bulk Fluid Transfers (Deliveries)

1) All bulk fluid transfer operations shall be performed under the direct supervision of knowledgeable County personnel. At no time shall the delivery vehicle or delivery vehicle operator be unsupervised.
2) The product level within the tank must be measured and available capacity verified before delivery.
3) Deliveries shall be made via fill ports equipped with catch basins to capture drips and spills.
4) Ensure an adequate supply of appropriate spill response equipment is readily available.
5) Post signs in delivery area displaying proper delivery procedures and emergency contact information.

ABOVEGROUND STORAGE TANKS

Used Oil Tanks

1) County personnel must verify the level of product in used oil tanks prior to filling.
2) Used oil tanks should only be filled via designated fill ports. Pumping used oil into the tank via a closed piping system is preferred to manually pouring used oil into the tank.

Brine Tanks

1) If multiple tanks are located onsite, the tanks should be plumbed to ensure that the complete failure of one tank will not drain all the tanks in the system (tanks must be isolated).
2) Minimize seeping and leaking at fittings by properly supporting piping and fittings, using flexible connectors or hoses to reduce stress, and installing corrosion-resistant fittings.
3) Consider placing hoses in non-permeable trenches or using drip-less nozzles to reduce repeated small spills.

RESIDENT DROP-OFF CENTER

Not Applicable ☒ Applicable ☐

CONCERN

Resident Drop-Off Centers are publicly accessible facilities where residents can drop off used automotive fluids (i.e. oil or antifreeze), municipal waste, recyclable, and/or organic waste, typically free of charge. Improper transfer or management of the waste materials can allow a number of pollutants including oils and greases, toxic and chemical compounds, nutrients, metals, and other wastes to enter waterways.

POLLUTION PREVENTION MEASURES

General *(applicable to all materials collected)*

1) Clearly identify waste materials accepted by the facility, and clearly mark designated collection areas.
2) Waste material should be inspected by a County representative, prior to disposal.
3) Avoid positioning waste receptacles near storm drains, water bodies, or areas of concentrated runoff.
4) When practical, receiving areas should be covered.
5) Do not allow containers to overflow or waste materials to accumulate on the ground.

Automotive Fluid Collection

1) Used oil, antifreeze, and automotive fluid receiving areas should be on impervious surfaces, covered, and provided with secondary containment, which shall be maintained clean and dry.
2) Provide lidded waste receptacles in the receiving area for the public to dispose of empty containers. Waste receptacles shall be emptied routinely and waste disposed of properly.
3) Collection areas shall be inspected daily and all trash and spilled liquids appropriately cleaned up.
4) The available capacity of waste liquid collection containers shall be routinely verified and waste removals scheduled, as needed.
5) Install appropriate controls to prohibit the overfilling of waste fluid collection containers.
6) Place appropriate spill response equipment in close proximity to drop-off areas.
7) If aboveground tanks are used to collect waste fluids, refer to BMP Fact Sheet GHP-07 (Aboveground Storage Tanks) for additional recommendations.

Organic Debris Collection

1) Routinely transfer collected organic debris/waste to a composting or disposal facility.
2) Do not permit composting of organic waste except at properly designed and permitted facilities.
3) Enact controls to prevent leaves and other windblown debris from entering stormwater inlets.

Municipal Waste / Recyclables Collection

1) Refer to BMP Fact Sheet GHP-01 (Waste Management) for additional recommendations.

BMP Fact Sheet

STOCKPILES

GH-09

Not Applicable ☒ Applicable ☐

CONCERN

The County may stockpile various erodible materials, the type of material can vary depending on the needs of the County. Stockpiled material may include soil, sand, millings, slag, cinders, sawdust, landscaping bark, compost, etc. Exposed stockpiles can easily erode due to wind or precipitation and contribute suspended solids to stormwater runoff.

POLLUTION PREVENTION MEASURES

1) Maintain stockpiles of erodible materials within roofed storage buildings or covered storage bins, if feasible. If not, stockpile material on an impervious surface and cover the stockpile.
2) Temporary stockpiles should be placed on an impermeable membrane (tarp) for quick clean-up.
3) Locate stockpiles away from drain inlets, catch basins, swales, areas of concentrated stormwater flow, water bodies, and environmentally sensitive areas.
4) Divert stormwater flows away from/around the stockpiles using a diversion device (e.g., temporary swale, berm, sandbags, or diversion fence).
5) Cover temporary stockpiles of erodible materials with a tarp that has been adequately secured. The covers must be in place at all times when the stockpile is not in active use.
6) When accessing a portion of the stockpile, only remove a section of the cover to minimize exposure to the elements.
7) Use barriers to isolate stockpiled materials from high-traffic areas to prevent tracking of materials.
8) Sweep (do not wash or hose down) in front of material stockpile storage areas at regular intervals, following loading and unloading activities, and during times of heavy use.
9) If material is observed migrating from the stockpile, clean up all migrated material upon discovery and provide additional controls to reduce migration from the stockpile. If such measures are ineffective implement controls to capture pollutants before they migrate off-site (e.g. silt fencing, inlet filters, filter socks, at-grade inlet protection, etc.).
10) Minimize material stockpile inventory based on historical inventory/usage records and public safety operational needs.
11) Cold mix asphalt shall be stored on and covered with plastic sheeting or comparable material.
12) Routinely inspect outdoor material stockpiles to verify existing controls are functioning properly and for signs of erosion or material transport.

BMP Fact Sheet

DEICING MATERIALS

GH-10

Not Applicable ☒ Applicable ☐

CONCERN

When salt and other de-icing materials are stored outside and uncovered, they have a much higher risk of being eroded and transported offsite by stormwater. Improper de-icing material and sand storage may result in stormwater runoff containing elevated concentrations of sodium chloride and dissolved solids. Sodium chloride (e.g., road salt) is an effective deicer but can be highly corrosive to stormwater facilities. Smaller waterways are at a higher risk to increases in salinity, which can threaten aquatic species. Additionally, runoff containing sodium chloride has the potential to reach drinking water sources where small traces can adversely impact public health.

POLLUTION PREVENTION MEASURES

1) Bagged de-icing chemicals must be stored indoors. If stored outdoors bags must be kept on pallets (off the ground) and covered at all times. Bags must be intact without holes or openings.
2) Bulk de-icing materials shall be stored under cover and on an impervious surface.
3) Bulk salt storage areas/buildings shall not be overfilled so that salt spills out beyond the entrance of the storage area/building.
4) Bulk salt storage areas/buildings shall be maintained in a structurally sound condition and in a way that prevents the release of salt and the infiltration of stormwater. Deicing materials should not touch the sides of metal storage containers.
5) Barriers such as berms, gates, knee walls, tarps, and/or straw bales shall be placed at the entrances of bulk salt storage areas/buildings to prohibit the migration of salt and prevent contact with precipitation/stormwater runoff.
6) Routinely inspect storage areas for migrating materials or deterioration of containment structures. Sweep up all migrating materials upon discovery and repair the source of the migrating pollutant.
7) Loading areas should be constructed of impervious material and covered or enclosed, to the extent practical, to reduce potential contact with stormwater.
8) Minimize the distance de-icing materials are transported during loading/unloading activities.
9) Prevent and/or minimize the spillage of salt and de-icing materials during loading/unloading activities, immediately clean spilled or tracked materials.
10) Sweeping of storage and loading/unloading areas shall be conducted immediately following loading/unloading activities.
11) Do not store de-icing materials (bulk or bagged) over or immediately adjacent to drains or waterways.
12) Control site drainage by diverting stormwater run-on away from storage/loading areas using appropriate measures (e.g., curbing, berms, etc.).
13) Slope storage/loading areas to direct salt-contaminated runoff to an appropriate collection area, and in a manner that prevents the runoff from reaching adjacent soil or surface waters.
14) Excess salt shall be removed from salt handling equipment (trucks, spreaders, etc.) following use/prior to storage. All cleaning shall occur on an impervious surface, which is sloped or curbed to contain any washwater and direct it to a collection area for recycling or proper disposal.

Appendix A

GHP Site Inspection Checklist

GOOD HOUSEKEEPING PLAN (GHP)
SITE INSPECTION CHECKLIST

Facility Name: _____ **Inspection Date:** _____

Inspector Name: _____ **Inspector Signature:** _____

- The intent of this inspection is to ensure that the site is being properly maintained and that there are no visible signs of pollutants entering the stormwater system.
- **A shaded status box designates an item in a non-compliant status. Please provide an explanation for all non-compliant items and subsequently document all corrective actions performed.**
- Retain the completed checklists for five (5) years.

Item	Status			CORRECTIVE ACTIONS/COMMENTS *Items which cannot be corrected immediately must be reported to the GHP/NPDES Program Manager*
	Yes	No	N/A	
GENERAL HOUSEKEEPING				
1. Are exterior areas of the facility free of accumulated trash, debris, and unneeded materials?				
2. Are stormwater drains and inlets free from debris, sediment, and evidence of spills/releases?				
3. Is the facility free from signs of erosion?				
4. Are paved surfaces free of accumulated sediment?				
5. Is spill response equipment available in maintenance areas, fueling areas, hazardous material storage areas, and/or other required areas?				
6. Are spill kits and absorbent materials clearly labeled and accessible (i.e. items are not piled on top of or in front of spill kits)?				
7. Are spill kits secured from being stolen or misused?				
8. Is there a labeled container present for the disposal of used spill cleanup material?				

GOOD HOUSEKEEPING PLAN (GHP)
SITE INSPECTION CHECKLIST

Item	Status			CORRECTIVE ACTIONS/COMMENTS *Items which cannot be corrected immediately must be reported to the GHP/NPDES Program Manager*
	Yes	No	N/A	
9. Does spill response equipment (i.e. spill kits, absorbent materials) need to be replenished?				
WASTE MANAGEMENT				
10. Are areas around solid waste containers/roll-offs/compactors free of excessive trash accumulation or overflowing containers?				
11. Are areas around solid waste containers/roll-offs/compactors free of visible evidence (i.e. leaks, staining) of ongoing stormwater pollution?				
12. Are scrap metal containers in good order and free from evidence of leaking oil/grease?				
13. For dumpsters, roll-offs, and other waste receptacles, where leaks are observed, have appropriate controls (e.g. containment, spill response, etc.) been enacted?				
14. Are the lids (if present) to solid waste containers closed?				
15. Is street sweeping/vactor waste being managed appropriately (i.e. no evidence of material migration)?				
16. Is waste cooking grease managed appropriately (i.e. no evidence of spilled material or excessive staining)?				
VEHICLE & EQUIPMENT STORAGE				
17. Are stored vehicles/equipment free from leaks?				
18. If leaks are present, are they being managed appropriately (drip pan or other methods in place to capture released liquids)?				
19. Are storage areas free of visible evidence of chronic leaks/spills (i.e. significant staining)?				

GOOD HOUSEKEEPING PLAN (GHP)
SITE INSPECTION CHECKLIST

Item	Status			CORRECTIVE ACTIONS/COMMENTS *Items which cannot be corrected immediately must be reported to the GHP/NPDES Program Manager*
	Yes	No	N/A	
VEHICLE & EQUIPMENT REFUELING				
20. Are the areas around refueling areas free from evidence of spills or leaks?				
21. Are refueling areas free of used absorbent material that has not been swept/cleaned up?				
22. Do fuel dispensers and hoses appear to be in good working order and well-maintained?				
VEHICLE MAINTENANCE				
23. Is there any indication that vehicle maintenance activities are being conducted outdoors?				
24. Is there any indication that vehicle maintenance activities are contributing to stormwater pollution?				
VEHICLE & EQUIPMENT WASHING				
25. If performed on-site, does all vehicle/equipment washing occur indoors?				
26. Is wash water collected and disposed of properly?				
27. Is there any indication that vehicle/equipment wash water is being released to stormwater conveyances or pervious areas?				
MATERIAL STORAGE				
28. Are all outdoor storage areas free from visible signs of leaks or spilled material?				
29. Are material storage containers in good condition?				

GOOD HOUSEKEEPING PLAN (GHP)
SITE INSPECTION CHECKLIST

Item	Status			CORRECTIVE ACTIONS/COMMENTS *Items which cannot be corrected immediately must be reported to the GHP/NPDES Program Manager*
	Yes	No	N/A	
30. Are drums, totes, and other containers (that are <u>not</u> empty) stored off the ground and covered, or stored indoors?				
31. Are liquid-containing drums/totes located outdoors provided with secondary containment?				
32. Are containers that are located outdoors equipped with closed lids except when material transfers are occurring?				
33. Are materials, which could impact stormwater, stored away from heavy traffic areas, or protected from vehicle collisions?				
34. Are chemical storage containers properly labeled?				
35. If empty drums are stored outside, are all openings equipped with caps to prevent water intrusion?				
ABOVEGROUND STORAGE TANKS				
36. Are all storage tanks, and surrounding areas free from visible signs of leaks or spilled material?				
37. Do storage tanks appear to be in good working order (e.g. free of obvious signs of damage or malfunctioning equipment)?				
38. Are remote fills associated with tanks free of liquid and debris?				
RESIDENT DROP-OFF CENTERS				
39. Are waste collection areas clearly identified?				
40. Are used oil/antifreeze collection tanks, containment structures, and surrounding areas free from visible signs of leaks or spilled material?				

GOOD HOUSEKEEPING PLAN (GHP)
SITE INSPECTION CHECKLIST

Item	Status			CORRECTIVE ACTIONS/COMMENTS *Items which cannot be corrected immediately must be reported to the GHP/NPDES Program Manager*
	Yes	No	N/A	
41. Do used oil/antifreeze collection tanks appear to be in good working order (e.g. free of obvious signs of damage or malfunctioning equipment)?				
42. Are empty used oil/antifreeze containers being collected and disposed of in the trash?				
43. Are areas around waste/recyclables containers free of excessive trash accumulation or overflowing containers?				
44. Are areas around waste/recyclables containers free of visible evidence (i.e. leaks, staining) of ongoing stormwater pollution?				
45. Are organic debris collection areas free of visible evidence of ongoing stormwater pollution (e.g. leaves and debris in stormwater conveyances)?				
STOCKPILES				
46. Are material piles, including salt, soil, sand, and millings isolated (i.e. covered, bermed, etc.) to prevent stormwater run-on and run-off?				
47. Are areas surrounding material piles (e.g. salt, soil, sand, millings, etc.) free of tracked or migrated material?				
DEICING MATERIALS				
48. Are all deicing materials stored indoors or undercover?				
49. Are salt storage structures in good condition (e.g. no evidence of material escaping or stormwater infiltration)?				
50. Is the salt loading area clean?				

GOOD HOUSEKEEPING PLAN (GHP)
SITE INSPECTION CHECKLIST

Item	Status			CORRECTIVE ACTIONS/COMMENTS *Items which cannot be corrected immediately must be reported to the GHP/NPDES Program Manager*
	Yes	No	N/A	
51. If deicing materials are tarped, is the tarp secure and covering the entire pile?				
52. Are bags of salt stored indoors, or off the ground and covered?				

ADDITIONAL COMMENTS:

Appendix B

GHP Stormwater Conveyance System Inspection Checklist

GOOD HOUSEKEEPING PLAN (GHP)
STORMWATER CONVEYANCE SYSTEM INSPECTION CHECKLIST

Facility Name: _____ **Inspection Date:** _____

Inspector Name: _____ **Inspector Signature:** _____

- The intent of this inspection is to ensure the free flow of stormwater within on-site conveyance systems and prevent damage/flooding.
- **If maintenance is needed, please provide an explanation, and document all corrective actions performed.**
- **Inspections shall include visually accessible infrastructure only; at no time shall inspection personnel enter a confined space.**
- Retain the completed checklists for five (5) years.

Item	Item Checked (Y/N/NA)	Maintenance Needed (Y/N)	CORRECTIVE ACTIONS/COMMENTS *Items which cannot be corrected immediately must be reported to the GHP/NPDES Program Manager*
CATCH BASINS / INLETS			
1. Look for debris and sediment blocking catch basin grates. If found, remove.			
2. Look for damage or cracks to the frame, grate, basin walls or bottom. If found, schedule repairs or replacement.			
3. Look for sediment and debris in the catch basin sump. If sediment fills 60% of the sump or comes within 6” of a pipe it should be scheduled for cleaning.			
4. If any type of filtering device is present, verify that the filter is not clogged, torn, or damaged; clean if clogged, replace if damaged.			
PIPES / CULVERTS			
5. Look for evidence of clogged piping (e.g. visual obstructions, standing water within manholes/inlets structures, etc.). If found, remove or schedule cleaning.			
6. Verify vegetation growth, if present, does not impede water flow. If it does, mow, cut back, or remove.			

GOOD HOUSEKEEPING PLAN (GHP)

STORMWATER CONVEYANCE SYSTEM INSPECTION CHECKLIST

Item	Item Checked (Y/N/NA)	Maintenance Needed (Y/N)	CORRECTIVE ACTIONS/COMMENTS *Items which cannot be corrected immediately must be reported to the GHP/NPDES Program Manager*
7. Inspect for damaged piping, inlets, outlets, headwalls, wingwalls, or excessive erosion. If found, make or schedule repairs.			
DITCHES / TRAPEZOIDAL SWALES			
8. Check for erosion, slumping, or undercutting. If found, make or schedule repairs.			
9. Look for trash and sediment accumulation. Remove all trash and remove sediment if it will impede water flow or clog downstream structures.			
10. Verify vegetation growth does not impede water flow. If it does, mow, cut back, or remove. Remove any trees or shrubs growing within the ditch.			
11. Check the integrity of check dams, filter socks, or other flow dissipation/filtering devices within the ditch or swale. Perform or schedule service if they are clogged, damaged, or deteriorated.			
12. Check inlets and outlets for debris accumulation, damage, or erosion. If found, make or schedule repairs.			

ADDITIONAL COMMENTS:

GUIDANCE DOCUMENT
GOOD HOUSEKEEPING PLAN - STORMWATER CONVEYANCE INSPECTIONS

INTRODUCTION

Maintaining catch basins, stormwater inlets, and other stormwater conveyance structures on a regular basis will remove pollutants, prevent backups, and ensure the system functions as intended to avoid flooding.

Each GHP-covered facility is required to conduct routine stormwater conveyance system inspections to ensure the free flow of stormwater within the conveyance system(s). The GHP includes a *"GHP Stormwater Conveyance System Inspection Checklist"*, to be used when completing the required inspections. This document provides additional background and guidance to aid facility personnel in completing the inspections.

CATCH BASINS / INLETS

Catch basins and inlets are all points for stormwater to enter storm drain systems. These structures are typically part of a larger conveyance system with many interconnected components where the impairment of one component can compromise the functionality of the larger system. Inlets and catch basins are subject to functional impairment by a variety of conditions, including:

- Structural damage including from vehicles and plows
- Cracks/joint separation at piping (inlet and outlet) connections
- Leaking due to cracks and joint separation
- Missing or damaged grates and grate frames
- Corrosion
- Blockage caused by debris, sediment, vegetation, or other objects

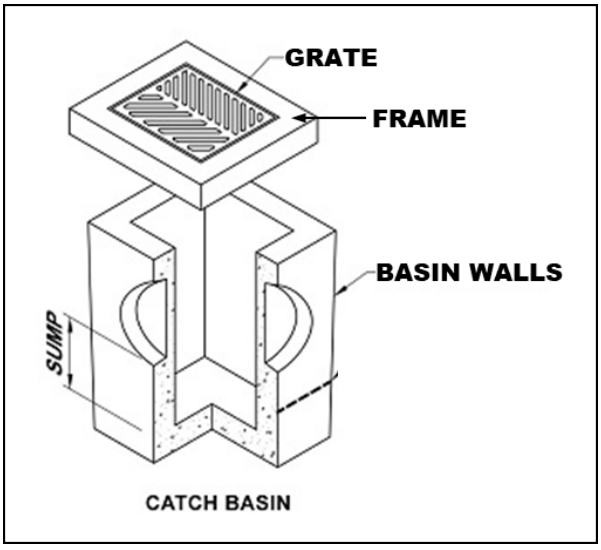

Figure 1 – Catch Basin Diagram

The following photos provide additional information related to the various inspection items, including examples of typical issues that may be encountered. The photo numbers correspond to the inspection checklist item number.

Inspection Item #1 [1]



Debris and sediment blocking inlet/catch basin grate.

Inspection Item #2 [2]



Damaged Grate

Inspection Item #2 [3]



Damaged Frame

Inspection Item #2 [4]



Failing brick walls with a stormwater inlet.

Inspection Item #2 [5]



Failing asphalt surrounding the inlet

[1] Grand Valley State University - https://www.gvsu.edu/groundswell/clogged-storm-drains-71.htm
[2] Georgia Department of Transportation – Stormwater System Inspection and Maintenance Manual, March 2020
[3] https://catchbasinauthority.ca/catch-basin-101/
[4] https://www.fixasphalt.com/catch-basin-repairs
[5] https://ccpia.org/catch-basin-and-manhole-inspections/

Inspection Item #3 [6]



Sediment and debris inside stormwater inlet

Inspection Item #3

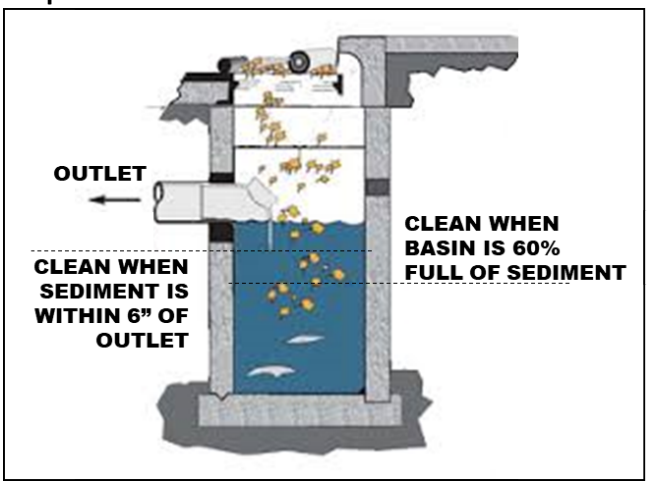

Remove sediment from a catch basin if it fills 60% of the sump or comes within 6" of a pipe.

Inspection Item #4 [7]



Example of inlet filter. Replace when filled or damaged. damaged.

Inspection Item #4 [8]



Example of an inlet filter sock, replace if

PIPES AND CULVERTS

Pipe systems are designed to convey stormwater runoff safely and effectively from inlets to various discharge points and outfalls. A culvert is a structure that channels water under an obstacle such as a roadway or railroad. These structures are subject to functional impairment by a variety of conditions, including:

- Blockage or obstruction due to build up of vegetation, debris, sediment, or other objects
- Cracks and/or joint separation
- Collapsed pipe
- Corrosion
- Root intrusion
- Lack of stabilization

[6] https://www.fixasphalt.com/catch-basin-repairs
[7] https://store.interstateproducts.com/products/Ultra-Drain-Guards/Ultra-Drain-Guard-Adjustable-Frame-Model
[8] https://www.newpig.com/pig-sediment-filter-sock/p/FLT787

Inspection Item #5 [9]



A pipe filled with sediment, inhibiting flow.

Inspection Item #5 [10]



Standing water around an inlet may indicate a blockage.

Inspection Item #6 [11]



Pipe conveyance filled with vegetation.

Inspection Item #7 [12]

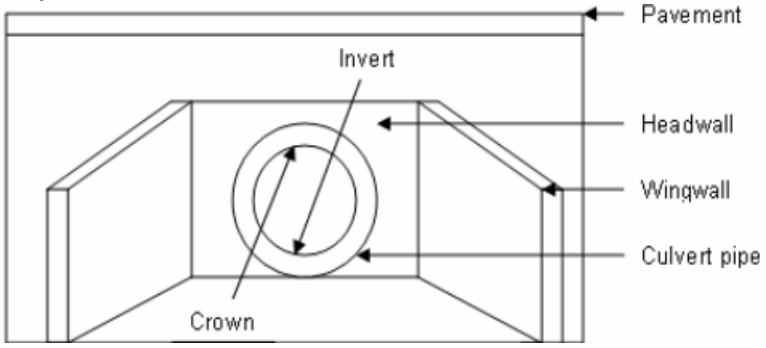

Diagram depicting various components of a culvert.

[9] Georgia Department of Transportation – Stormwater System Inspection and Maintenance Manual, March 2020
[10] https://www3.epa.gov/region9/water/npdes/stormwater-feature.html
[11] Georgia Department of Transportation – Stormwater System Inspection and Maintenance Manual, March 2020
[12] https://www.researchgate.net/figure/Components-of-a-Culvert_fig34_228685906

Inspection Item #7 [13]



A crack is the culvert headwall.

Inspection Item #7 [14]



Evidence of erosion around a culvert.

DITCHES AND SWALES

Ditches and swales serve similar functions. Both are used to convey stormwater. However, there are slight differences. A ditch is a narrow channel typically found along roads and at the edges of parking lots/driveways. A swale is like a ditch, but it is broad and shallow, and usually covered or lined with turfgrass or stone. Issues associated with these structures, which could impede their function include:

- Blockage or obstruction due to vegetation, debris, sediment, or other objects
- Erosion
- Rapidly moving water
- Lack of adequate vegetative cover for grass-lined channels

Inspection Item #8 [15]



Erosion and slumping within a drainage ditch.

Inspection Item #8 [16]



Slumping within a drainage swale.

[13] https://www.sbt-durabi.org/articles/xml/ARN0/
[14] https://lufkindailynews.com/news/local/culverts-crumbling-in-precinct-1/article_a9fed902-4379-5248-ab11-7471e2974298.html
[15] https://graniteseed.com/blog/how-to-stop-a-ditch-from-eroding/
[16] https://www.mnwcd.org/erosion-control

Inspection Item #9 [17]



Litter and debris within a ditch.

Inspection Item #9 [18]



Litter and debris within a swale.

Inspection Item #10 [19]



Cracks and joint separation in concrete channels, removal of vegetation may prevent future damage.

Inspection Item #11 [20]



Rock check dam across a channel.

Inspection Item #11 [21]



Filter sock check dams across a grass swale.

[17] https://craven.ces.ncsu.edu/2023/02/for-those-who-love-to-litter/
[18] https://www.cityoftulsa.org/government/departments/public-works/stormwater-quality/adopt-a-stream/
[19] Georgia Department of Transportation – Stormwater System Inspection and Maintenance Manual, March 2020
[20] EPA Stormwater Best Management Practice, Check Dams, December 2021
[21] EPA Stormwater Best Management Practice, Check Dams, December 2021

Inspection Item #12 [22]



Inlet to a rock-lined swale.

Inspection Item #12 [23]



Sediment accumulation at swale inlet.

END OF DOCUMENT

[22] https://www.stormwater.com/erosion-control/vegetation-management/article/13016118/inlet-protection-during-constructionand-after

[23] https://www.stormwater.com/erosion-control/vegetation-management/article/13016118/inlet-protection-during-constructionand-after

Appendix C

General Spill Response Procedures

SPILL RESPONSE AND NOTIFICATION PROCEDURES

A. Discovery of a Spill

1. Upon discovery of a spill, facility personnel should immediately assess the situation and determine if the spill is considered a "Minor" or "Major" spill. For a spill to be considered "Minor" all the following conditions must be satisfied:

    - ❖ The type of material spilled is known;
    - ❖ The spill is confined to the immediate work area;
    - ❖ The spill has not reached storm drains, sanitary sewer systems, open water, or surrounding soils;
    - ❖ The spill can be safely managed;
    - ❖ The employee can contain and clean up the spill with the PPE that is normally used in the work area;
    - ❖ The spill does not pose a serious threat of fire or an explosion; and
    - ❖ The spill does not pose conditions that are immediately dangerous to life or health.

2. If all the above conditions are met, the spill is considered "Minor". Refer to ***Section B*** of this document for appropriate response actions.

3. If all the above conditions are not met, then the spill is considered "Major". Refer to ***Section C*** of this document for appropriate response actions.

4. If a spill involves flammable liquids, ignitable vapors may be present - precautions must be taken to prevent ignition. Do not turn on or off equipment since sparks may be generated. Additionally, avoid the movement of equipment that could create static electricity. Larger spills of flammable liquids could pose a fire threat and would be considered a "Major" spill. Refer to ***Section C*** for appropriate actions.

B. Response to a "Minor" Spill

1. Identify the source of the spill and the direction in which the spill is heading.

2. Attempt to stop the spill at the source. Where applicable, the source of the spill shall be taken out of service until repairs can be made. If the spill is related to a fuel dispensing system, activate the Emergency Shut-Off (ESO) switch to prevent additional fuel disbursements.

3. If material is released outside a containment area, it is crucial that the material be contained as quickly as possible. Following proper safety procedures, use absorbent materials or diking to contain the spill. Prevent the spill from reaching storm drains, sanitary sewers, or open water. If a spill is flowing toward a drain, install temporary diking around the drain, block off the drain with a drain cover, or place absorbent material around the drain to prevent a discharge.

4. Once the spill has been stopped and contained, estimate the quantity of the spill. Consult applicable Safety Data Sheet (SDS) for material compatibility and environmental precautions. Note and follow recommendations regarding special precautions, spill response equipment, methods, or precautions. All cleanup work shall be conducted in accordance with existing safety protocols and SDS recommendations. Contact the facility Superintendent/Supervisor, or designee, for assistance if needed.

5. Recover or clean up the spilled material as much as possible. Material that cannot be reused must be discarded in accordance with state and federal regulations. Liquids absorbed by porous materials (e.g., wood, gravel, significant quantities of absorbent material, etc.) shall be placed into US DOT-approved 30-gallon or 55-gallon steel drums. Following cleanup, the container shall be secured and appropriately labeled to identify the contents and the date of the spill/cleanup. Containers shall be stored indoors and provided with secondary containment until transported off-site for disposal.

6. For spills that do not involve flammable liquids or other potential hazardous wastes, small quantities of used absorbent materials may be double bagged and disposed of along with municipal trash as long as all liquids have been absorbed (no free liquid may be present).

7. If the spilled material is a flammable liquid, corrosive liquid (pH ≤ 2 or ≥ 12.5), or other potential hazardous waste, all recovered product, impacted material, and used absorbent must be placed into a US DOT-approved containers/drums. Following cleanup, the container(s) shall be secured and appropriately labeled to identify the contents and the date of the spill/cleanup. Containers shall be stored indoors and provided with secondary containment until transported off-site for disposal. The facility Superintendent/ Supervisor, or designee shall be notified that a potential hazardous waste was released and that a waste characterization may be needed to facilitate proper disposal.

8. Surfaces that are contaminated by the spill shall be cleaned utilizing dry absorbent material. Tools and equipment that have been used in the cleanup must be decontaminated immediately after use. Decontamination water (if used) must be minimized, containerized, and disposed of properly.

9. If waste requires disposal, notify the facility Superintendent/Supervisor, or designee who will arrange for the proper characterization and disposal of any waste material. Representative sampling and analysis may be necessary to properly characterize the waste. The waste must be transported and disposed of in compliance with all applicable laws and regulations. Waste manifests, trip tickets, or bills of lading (if required) for waste disposal shall be kept on file.

10. Facility personnel shall restock/replace spill response equipment and absorbent materials used during the clean-up efforts.

11. The facility Superintendent/Supervisor, designee, or other appropriate County personnel shall be notified of the spill in accordance with ***Section D*** of this document.

C. Response to "Major" Spill

A "Major" spill is any discharge that does not meet the definition of a "Minor" spill. Any employee or contractor observing, being involved with, or recognizing a potential or actual spill of oil or other hazardous material, other than a "Minor" spill is responsible for performing the following actions:

1. If there is no danger to human health, attempt to stop and contain the spill at the source. If the spilled material is unknown, if PPE other than that which is typically used in your work area, is necessary to approach the spill area, or if assistance is required to stop the spill, do not attempt to contain the spill. If the spill is related to a fuel dispensing system, activate the Emergency Shut-Off (ESO) switch.

2. Most County employees lack the appropriate training to respond to "Major" spills. If the spill is of an unknown substance, is of a quantity that cannot be safely managed, or poses other risks beyond the training level of the employee, the employee should not attempt to contain or clean up the spill.

3. Evacuate individuals from the area and keep personnel away from the impacted area.

4. Immediately notify the facility Superintendent/Supervisor, or designee of the incident. The notified individual will determine the need for further evacuations and contact emergency response personnel (911), as necessary. *If a situation represents an immediate and grave danger to personnel, the public, structures, or other infrastructure, the individual discovering the incident may call 911 directly without first notifying facility management.*

5. The facility Superintendent/Supervisor or designee will determine if assistance from emergency response contractors is required to clean up the incident and will coordinate such spill response efforts with spill response contractors and other County agencies and first responders.

6. Facility personnel will provide assistance to emergency responders, as appropriate.

D. Reporting a Spill (Internal Notifications)

1. Once a spill is contained and cleanup operations have been initiated, the individual discovering the spill shall notify the appropriate County representatives and provide the following information:

    a) Identify the location, date, and time of the incident;
    b) Identify the type of material spilled or discharged;
    c) Estimate the quantity spilled and the rate of the spill;
    d) Identify the cause of the spill or discharge;
    e) Identify impacted media or infrastructure (soil, storm drains, open water bodies, etc.);
    f) Determine the extent of injuries involved; and
    g) Provide response measures implemented by the facility personnel.

E. Reporting a Spill (Regulatory Notifications)

State of Maryland Reporting Requirements (COMAR 26.10.01.05)

1. Upon discovery of a spill, the Responsible Person shall notify the MDE Emergency Response Division **within two (2) hours** by calling 866-633-4686. The caller shall be prepared to provide the following information:

    a) The time and date of the spill;
    b) The location and cause of the spill;
    c) The mode of transportation or type of facility involved;
    d) Type and quantity of oil spilled;
    e) Details regarding any assistance required;
    f) The name, address, and telephone number of the person making the report; and
    g) Any other pertinent information requested by the Department.

2. MDE will provide further guidance on additional responsibilities.

3. Within **ten (10) working days** of the completed removal and clean-up activities, the Responsible Person shall prepare a report using either County letterhead detailing the incident. The report shall contain the following:

    a) Date, time, and place of the spill;
    b) The amount and type of oil or hazardous substance spilled;
    c) A complete description of circumstances that contributed to the spill;
    d) A complete description of the containment and removal operations performed, including disposal sites to which oil refuse was transported;
    e) Procedures, methods, and precautions instituted to prevent the recurrence of an oil spill from the facility involved;
    f) Any other information considered necessary or required by the MDE for a complete description of the incident; and
    g) A certification that the information provided is true and correct to the knowledge of the person signing the report.

4. The completed report shall be submitted to mdeerd.mema@maryland.gov or faxed to 410-537-3932.

5. A digital copy of the completed report and any accompanying documentation shall be retained

Federal Reporting Requirements - National Response Center (40 CFR 110)

1. If any of the following criteria are met the Responsible Person shall notify the National Response Center (NRC) **within two (2) hours** of the spill discovery by calling 800-424-8802 or 202-426-2675.

    - ❖ The spill has caused a film, sheen, or discoloration of the surface water or shorelines;
    - ❖ The material spilled will violate applicable water quality standards (surface water or groundwater); or
    - ❖ The spill has caused a sludge or emulsion to be deposited beneath the surface of the water or on the shoreline.

2. At a minimum, the following information shall be provided to the NRC:

    a) Name, organization, and telephone number of reporting party;
    b) Name and address of the responsible party;
    c) Date, time, and location of the incident;
    d) Source and cause of the discharge;
    e) Type of material(s) discharged;
    f) Quantity of materials discharged;
    g) Danger or threat posed by discharge;
    h) Number and types of injuries (if any);
    i) Weather conditions at the incident location; and
    j) Other information to help emergency personnel respond to the incident.

3. If unable to report to the NRC, reports can be made to the EPA Regional Office at 800-438-2474 or the U.S. Coast Guard (USCG) at 202-372-1001. The NRC, EPA, or USCG will provide further guidance.

4. A digital record of the NRC notification and any accompanying documentation shall be retained on-site.

Federal Reporting Requirements - EPA Regional Administrator (40 CFR 112.4)

1. If the facility where the spill occurred is regulated under 40 CFR 112 and is required to have a Spill Prevention, Control, and Countermeasures (SPCC) Plan, the Responsible Person shall report the spill to the EPA Region III Administrator when any of the following criteria are met:

   - ❖ More than 1,000 gallons of oil is discharged to navigable waters or adjoining shorelines in a single incident; or
   - ❖ More than 42 gallons of oil is discharged to navigable waters or adjoining shorelines in each of two incidents occurring within any twelve-month period.

2. The report shall be made in writing **within 60 days** of the spill and shall contain:

   a) Name and location of the facility;
   b) Owner/operator name;
   c) Maximum storage/handling capacity of the facility and normal daily throughput;
   d) Corrective actions and countermeasures taken;
   e) Adequate description of the facility including maps, and flow diagrams;
   f) Cause of the discharge to navigable waters, including a failure analysis;
   g) Additional preventative measures taken or planned to minimize discharge reoccurrence; and
   h) Other information required by the EPA Regional III Administrator.

3. The report shall be submitted to the EPA Regional Administrator at the following address:

   EPA Regional Administrator
   US EPA Region 3
   1650 Arch Street (3RA00)
   Philadelphia, PA 19103-2029

4. A copy of the report shall be retained in the facility SPCC Plan.

Appendix D

Training Records

GOOD HOUSEKEEPING PLAN (GHP)
TRAINING ATTENDANCE LOG

FACILITY NAME: _____

DATE	NAME *(PRINT)*	SIGNATURE

By signing I affirm that I have completed the required annual training; and I am aware of and understand my responsibilities under this Plan.

GOOD HOUSEKEEPING PLAN (GHP)

Stepney Water Tower and Booster Station
1313 South Philadelphia Boulevard
Aberdeen, MD 21001

June 30, 2025

TABLE OF CONTENTS

1.0 BACKGROUND & INTRODUCTION 1
1.1 Objectives 1
1.2 Potential Stormwater Pollutants 1
2.0 RESPONSIBILITIES 3
2.1 GHP Implementation 3
2.2 Plan Review and Modification 3
2.3 Inspections 3
2.3.1 GHP Site Inspections 3
2.3.2 Conveyance System Inspections 4
2.4 Training 4
3.0 BEST MANAGEMENT PRACTICES (BMPs) 5
3.1 Applicability of BMP Fact Sheets 5
3.2 BMP Fact Sheets 5

List of Tables

TABLE 1-1 POTENTIAL STORMWATER POLLUTANTS AND THEIR SOURCES 2

List of BMP Fact Sheets

GH-01 - Waste Management
GH-02 - Vehicle and Equipment Storage
GH-03 - Vehicle/Equipment Refueling
GH-04 - Vehicle Maintenance
GH-05 - Vehicle/Equipment Washing
GH-06 - Material Storage
GH-07 - Aboveground Storage Tanks
GH-08 - Resident Drop-Off Centers
GH-09 - Stockpiles
GH-10 - Deicing Materials

Appendices

Appendix A: GHP Site Inspection Checklist
Appendix B: GHP Stormwater Conveyance Inspection Checklist
Appendix C: General Spill Response Procedures
Appendix D: Training Records

List of Acronyms

AST	-	Aboveground Storage Tank
BMP	-	Best Management Practice
CFR	-	Code of Federal Regulations
GHP	-	Good Housekeeping Plan
MDE	-	Maryland Department of the Environment
MS4	-	Municipal Separate Storm Sewer System
NPDES	-	National Pollutant Discharge Elimination System
SPCC	-	Spill Prevention, Control, and Countermeasure Plan

1.0 BACKGROUND & INTRODUCTION

Polluted stormwater runoff has the potential to enter the County's storm sewer systems (referred to as a municipal separate storm sewer system or MS4), and then discharge, untreated, into local water bodies. To address this potential stormwater pollution, the County is required to obtain a NPDES permit from the Maryland Department of the Environment (MDE). The NPDES Permit requires the County to take actions to prevent stormwater pollution, maintain storm sewer systems, monitor stormwater discharges, and develop and implement comprehensive management programs to minimize the discharge of pollutants from the storm sewer system.

To comply with Part IV.D.4.b of the County's Phase I MS4 Permit, the County must develop, implement, and maintain a Good Housekeeping Plan (GHP) for certain County-owned properties not required to be covered under Maryland's General Permit for Discharges from Stormwater Associated with Industrial Activities *(General Permit 12-SWA / 20-SW).*

To support this effort, a *"Good Housekeeping Plan Applicability Certification"* has been developed to evaluate and document if a specific County-owned facility is subject to the GHP requirements. The *"GHP Applicability Certification"* includes the following ten (10) potential stormwater polluting activities. If any of the covered activities are performed at the facility, then that facility is required to implement a site-specific GHP. The GHP will include each of the potential stormwater polluting activities identified in the *"GHP Applicability Certification"* and corresponding pollution prevention procedures.

- Waste Management
- Vehicle and Equipment Storage
- Vehicle/Equipment Refueling
- Vehicle Maintenance
- Vehicle/Equipment Washing
- Material Storage
- Aboveground Storage Tanks
- Resident Drop-Off Center
- Stockpiles
- Deicing Materials

1.1 Objectives

The GHP was developed to outline suitable practices, procedures, and protocols, or Best Management Practices ("BMPs") for reducing and/or preventing stormwater pollution associated with operations at covered County-owned properties. The intent of the pollution prevention procedures included in the GHP is to limit the release of materials with the potential to impact stormwater, this includes reducing or eliminating (to the extent practical):

- The occurrence of spills and leaks;
- The accidental dumping or release of materials;
- The accumulation of waste, trash, debris, unused parts/equipment, etc.;
- The exposure of hazardous materials to precipitation/run-off;
- Stormwater run-off contamination by improperly stored materials; and/or
- Illicit discharges to the storm drain system.

1.2 Potential Stormwater Pollutants

Table 1-1 on the following page provides a list of common potential pollutants that may result from the GHP-regulated activities identified above. Understanding the sources of these pollutants can help in achieving the goals and objectives of the GHP program.

TABLE 1-1 POTENTIAL STORMWATER POLLUTANTS AND THEIR SOURCES

		Waste Management	Vehicle/Equipment Storage	Vehicle/Equipment Refueling	Vehicle Maintenance	Vehicle/Equipment Washing	Material Storage	Aboveground Storage Tanks	Resident Drop-Off Center	Stockpiles	Deicing Materials
Pollutants	**Sources**	**Associated GHP Activity**									
Sediment	Land disturbance; erosion; paved surfaces; material stockpiles; waste storage; salt/abrasive application	X				X	X		X	X	X
Hydrocarbons *(petroleum compounds)*	Leaking vehicle and equipment; vehicle and equipment cleaning; spills; improper storage; maintenance activities; scrap metal disposal; improper disposal	X	X	X	X	X	X	X	X		
Metals	Vehicle brake and tire wear; vehicle/equipment exhaust; batteries; galvanized metal; paint and wood preservatives; fuels, pesticides, and cleaners; vehicle fueling, maintenance, and washing; industrial waste	X	X	X	X	X	X	X	X		
Toxic Chemicals	Pesticide application; improper chemical storage; leaks and spills from storage containers; leaking vehicles; maintenance activities	X	X		X	X	X	X	X		
Chlorides	De-Icing chemicals										X
Trash/Debris	Improper waste storage and disposal; leaking trash containers; littering; poor housekeeping	X	X				X		X		
Nutrients (nitrogen and Phosphorus)	Fertilizers; malfunctioning septic systems; sewer overflows; animal/pet waste; vehicle washing; decaying grass and leaves; leaking trash containers; atmospheric deposition	X				X	X		X		

2.0 RESPONSIBILITIES

2.1 GHP Implementation

A separate GHP is required for each covered facility. The following individual *(identified by name and/or title)* is accountable for the administration and implementation of the GHP at this facility and has the authority to commit the necessary resources to implement this Plan.

_____

Name and/or Title of Responsible Person

The Responsible Person listed above shall ensure that facility personnel involved in any GHP-covered activities identified in this Plan, are provided with access to, and are familiar with, the contents of this Plan.

2.2 Plan Review and Modification

The *"GHP Applicability Certification"* completed for this facility must be reviewed and updated once every permit term, or within one (1) year of substantial changes to a facility's operations that could reasonably contribute to stormwater pollution. Any newly constructed/acquired facility must be assessed within one (1) year of initiating operations at the facility. The facility's GHP must be amended and reissued to the facility within one (1) year of any changes to the facility's *"GHP Applicability Certification"*.

When warranted, the BMP Fact Sheets provided in Section 3.0 may need to be updated or revised. At the same time, additional BMP Facts Sheets may be added. The need for such updates or modifications will be at the discretion of the County's GHP Program Administrator.

2.3 Inspections

The County's MS4 permit requires each facility covered by a GHP to have the following:

1. Written procedures for annually assessing County properties to prevent the discharge of pollutants, spills, and leaks into the County's storm sewer system; and

2. Written procedure for performing stormwater conveyance system inspections and for removing debris that may cause clogging, backups, and flooding.

To meet these requirements, each facility that is covered by a GHP will be required to complete routine site inspections and stormwater conveyance system inspections as detailed below. Facility management will be responsible for ensuring the necessary inspections are completed within the required timeframes, that corrective actions (if needed) are performed, and that records of inspections and completed corrective actions are maintained for at least five (5) years.

2.3.1 GHP Site Inspections

The GHP Site Inspection will be performed to ensure that each GHP-covered facility is being properly maintained and that there are no visible signs of pollutants entering the stormwater system. GHP facilities shall utilize the *"GHP Site Inspection Checklist"*, provided in ***Appendix A*** to complete the required inspection. At a minimum, each facility is to be inspected every five (5) years.

2.3.2 Conveyance System Inspections

Stormwater conveyance systems are generally comprised of curbs and gutters, catch basins, inlet structures, swales, channels, piping, culverts, detention ponds, outfalls, or other structures that are used to collect, contain, and convey stormwater runoff.

The unimpeded movement of stormwater through conveyance systems is critical in avoiding backups and flooding, which can impede facility operations and damage property. Routine inspections and preventative care of stormwater conveyance systems can ensure these systems function as intended and prevent the need for costly and time-consuming repairs and retrofits.

Each GHP-covered facility is required to conduct routine stormwater conveyance system inspections to ensure the free flow of stormwater within the conveyance systems. GHP-covered facilities shall utilize the *"GHP Stormwater Conveyance System Inspection Checklist"*, provided in ***Appendix B*** to complete the required inspections. At a minimum, facility conveyance system inspections are to be conducted every five (5) years.

2.4 Training

As part of the GHP requirements within the County's Phase I NPDES permit, annual training must be provided to all appropriate staff and contractors. Such training shall be provided to any individuals responsible for implementing the GHP, performing the required inspections, or involved in any of the GHP-covered activities identified in this Plan. The required training shall focus on the duties and responsibilities assigned to site personnel in implementing the GHP and the best management practices (BMPs) prescribed in this Plan for preventing, reducing, and eliminating the discharge of pollutants during facility activities.

The County's MS4/GHP Program Coordinator will be responsible for developing the required training and disseminating it to GHP-covered facilities. Each GHP-covered facility will be responsible for identifying staff/contractors who must attend annual training, ensuring identified staff complete the required training, and maintaining records that document training dates and attendees. Training records and other documentation shall be maintained in ***Appendix D*** of this Plan.

3.0 BEST MANAGEMENT PRACTICES (BMPs)

This section contains a BMP Fact Sheet for each of the ten (10) GHP-regulated activities. The County's operations are not limited to the BMPs contained within this document; nor is the County required to implement all of the pollution prevention measures identified within each BMP Fact Sheet. The County should select and implement those measures that are applicable and have the greatest potential for reducing stormwater pollution.

The BMP Fact Sheets contained within this document offer recommended protocols for a particular activity. These pollution prevention measures are considered non-structural BMPs with a focus on source control of potential pollutants.

3.1 Applicability of BMP Fact Sheets

The *"GHP Applicability Certification"* completed for this facility has identified the activities conducted at this facility that require coverage under this Plan. Each of the BMP Fact Sheets shall be marked as to whether they are applicable or not applicable to this facility. The Applicable/Not Applicable indicator on each BMP Fact Sheet can be revised in response to changes in operations at the facility.

3.2 BMP Fact Sheets

BMP Fact Sheets can be found on the following pages. For the sake of consistency, the general outline of a BMP Fact Sheet will be as follows:

- Identification of GHP-covered activity.
- Applicability of the BMP Fact Sheet to the facility.
- A general description of the concern the activity poses to stormwater.
- Recommended pollution prevention measures for reducing/eliminating stormwater pollution.
- Additional sources of information, if applicable.

WASTE MANAGEMENT

Not Applicable ☒ Applicable ☐

CONCERN

Improperly managed waste can allow trash and debris to be washed into storm drains which poses a concern to water quality, marine life, and public health. It also has the potential to create obstructions in the drainage system, which can lead to backups and flooding. Additionally, improper storage and handling of waste materials can allow pollutants including oils and greases, toxic and chemical compounds (including nutrients), bacteria, metals, and other potentially hazardous wastes to enter waterways.

POLLUTION PREVENTION MEASURES

General *(applicable to all waste management activities)*

1) Provide suitable containers, preferably with working covers, to collect waste materials.
2) Ensure that appropriate waste containers are available in areas where waste is generated.
3) Provide a cover over waste storage areas, if feasible.
4) Avoid positioning waste receptacles near storm drains, water bodies, or areas of concentrated runoff.
5) Ensure that lids to waste containers *(if present)* are kept closed to prevent the intrusion of precipitation and prevent trash from blowing out of the receptacle.
6) For waste receptacles, which do not have lids and could leak, containers should be inspected regularly and controls (e.g., containment, spill response, etc.) shall be enacted whenever leaks or dry-weather discharges are observed.
7) Routinely inspect waste containers, roll-offs, compactors, and other waste receptacles for the presence of excessive waste accumulation and overflowing containers.
8) Ensure that wastes accumulating on the ground are placed in a suitable waste container.
9) Ensure that wastes are removed from the facility regularly by a licensed and contracted vendor.
10) Repair or replace damaged waste container lids.

Trash Compactors

1) Routinely inspect trash compactors for malfunctioning equipment or leaking hydraulic oil and provide the appropriate spill response if leaking equipment is encountered.
2) Regularly inspect compactors for leaking fluids and implement appropriate controls such as spill response/cleanup, collection or diversion of released fluids, providing secondary containment, etc. whenever leaks or dry-weather discharges are observed.

Scrap Metal Collection Containers

1) Avoid placing oily or grease-covered items in uncovered scrap metal recycling collection containers. If needed, wrap oily/greasy items in plastic garbage bags before placing them in the collection container.

Hazardous/Universal Wastes

1) Ensure that hazardous waste and universal wastes (e.g., batteries, bulbs, etc.) are collected and stored indoors or within covered collection containers.
2) Verify that hazardous/universal waste collection containers are in good condition, not leaking, and compatible with the wastes being stored.

Street Sweeping / Vactor Truck Material Storage

1) Do not site storage areas near storm drains, open water bodies, or areas of concentrated runoff.
2) Install sediment control devices (e.g. silt fence, silt socks, hay bales, etc.) around the staging area. Inspect these controls regularly and replace them as needed.
3) Cover the materials staging area, if feasible.
4) Provide oil-absorbent booms if necessary to control oily discharge. Inspect and replace booms regularly.
5) The staging area should be checked periodically for evidence of sediment migrating outside of the staging area. Material that has migrated out of the staging area should be promptly swept and returned to the staging area or disposed of.

Waste Cooking Oil/Grease

1) Maintain storage containers indoors or within a covered location, if feasible.
2) Storage containers shall be secured to prevent infiltration of precipitation and accidental/intentional spills or releases.
3) Carefully transfer waste oil/grease to the appropriate collection container to avoid spills.
4) Maintain suitable spill response equipment near collection containers. Immediately clean up any spilled oil/grease. Keep the exterior of the collection container clean and free of spilled oil/grease.
5) Provide secondary containment for collection containers, if feasible.

VEHICLE AND EQUIPMENT STORAGE

Not Applicable ☒ Applicable ☐

CONCERN

Vehicles and equipment may be stored onsite to support various County operations (e.g., construction, maintenance, snow removal, roadside assistance, mass transit, mowing, etc.). Examples of County owned and operated vehicles and equipment stored onsite at any given time include but are not limited to, the following: cars, trucks, buses, emergency response vehicles, garbage trucks, heavy equipment (backhoes, frontend loaders, etc.), forklifts, towable generators, portable light stands, and roadside equipment. Vehicle and equipment storage is considered a pollutant source due to the potential for incidental releases of petroleum products, lubricants, and various automotive fluids.

POLLUTION PREVENTION MEASURES

1) When possible/practical, store vehicles and equipment inside or under cover to prevent exposure to precipitation.
2) If vehicles or equipment must be stored outside, store vehicles/equipment in designated areas away from areas of concentrated runoff, storm drains, and other stormwater conveyances.
3) Vehicles and equipment shall be staged on impervious (asphalt or concrete) surfaces;
4) Keep truck beds clean and ensure potential stormwater pollutants are stored in closed containers, covered, or otherwise protected from stormwater exposure.
5) Conduct routine visual inspections of vehicles and equipment for the presence of leaks and respond accordingly.
6) Leaking vehicles/equipment should be moved inside or under cover. At a minimum, drip pans or absorbent pads shall be used to contain the leak until the vehicle/equipment can be relocated and the leak addressed.
7) Drain all fluids from wrecked or heavily damaged vehicles and equipment before storage.
8) Have an adequate supply of appropriate spill response equipment readily available and clean up all spills and leaks immediately utilizing dry cleaning techniques (e.g. absorbents and brooms).
9) Train staff in spill response so that incidents are addressed in a timely fashion.
10) Do not wash down areas where leaks have collected on ground surfaces; use dry cleaning methods such as granular absorbents and brooms.

VEHICLE AND EQUIPMENT REFUELING

Not Applicable ☒ Applicable ☐

CONCERN

Refueling activities associated with County vehicles and equipment can result in a discharge of fuel (gasoline and diesel fuel), which has the potential to enter the storm drain system and/or a nearby waterway. Such releases can introduce hydrocarbons, metals, and other toxic chemicals to stormwater runoff.

POLLUTION PREVENTION MEASURES

General Procedures *(applicable to all refueling activities)*

1) Routinely *(at least daily)* inspect the fuel dispensing area for any spills or leaks.
2) Routinely inspect fuel dispensing equipment looking for leaking or damaged equipment. Damaged or malfunctioning equipment shall be taken out of service until it has been repaired.
3) Fuels will only be dispensed into authorized vehicles, equipment, and approved containers.
4) Vehicle operators must remain outside of their vehicles and in attendance of fuel dispensers at all times while dispensing fuel.
5) Third-party contractors must be trained in proper refueling procedures and pollution prevention.
6) Do not utilize a foreign object to keep the dispenser nozzle in the open position. If present, a “hold-open” latch on the nozzle may be used.
7) Do not “top off” a vehicle’s fuel tank once the dispenser nozzle’s automatic shut-off has been activated. Topping off tanks may result in spills. Post signs in fueling areas warning vehicle operators against "topping off" of vehicle fuel tanks.
8) After refueling has stopped, allow several seconds to pass before removing the nozzle and returning it to the dispenser. This will prevent incidental dripping from the nozzle.
9) Employees refueling vehicles shall note the location of the “Emergency Fuel Shut Off” switch, to be used to stop the flow of fuel to the dispensers in the event of a release or emergency.
10) Have an adequate supply of appropriate spill response equipment readily available and clean up all spills immediately utilizing dry cleaning techniques (e.g. absorbents and brooms).
11) Immediately clean up and dispose of used absorbent material.
12) Do not wash down fueling areas; use dry cleaning methods such as granular absorbents and brooms.
13) Conduct refueling activities over impervious (e.g. concrete) surfaces. Place drip pans or absorbent pads under the nozzle if fueling occurs over a permeable surface such as grass or soil.
14) Install oil control devices in storm drains that may receive contaminated runoff from fueling areas.
15) Cover fueling areas with a canopy or roof to prevent direct contact with rainfall. Direct run-on away from fueling areas and collect fueling area run-off in a dead-end sump or oil-water separator.

Mobile Equipment Refueling

1) Refuel equipment on an impervious surface, downgradient of, and at the farthest practical distance from any storm drain, stormwater conveyance, stormwater management feature, or waterway.
2) Utilize secondary containment when refueling equipment (when practical).
3) Ensure mobile refuelers are parked in designated locations and away from areas of concentrated run-off, storm drains, and other stormwater conveyances.
4) Ensure that procedures are in place and that staff is properly trained in spill response/cleanup so that leaks and spills are addressed appropriately and promptly.

VEHICLE MAINTENANCE

GH-04

Not Applicable ☒ Applicable ☐

CONCERN

Vehicle and equipment maintenance can impact the water quality of nearby waterways by exposing stormwater to various pollutants including petroleum hydrocarbons, solvents, antifreeze/coolants, used oil, lubricating oil, grease, brake fluid, metals, and various chemicals. Additionally, vehicles that are wrecked or awaiting repair can be a source of pollution if leaking fluids are not properly controlled.

POLLUTION PREVENTION MEASURES

1) Conduct vehicle and equipment maintenance activities indoors.
2) Make sure incoming vehicles and equipment are inspected for leaking fluids and oil.
3) Move leaking vehicles or equipment indoors or under cover as soon as possible. At a minimum, a drip pan or absorbent pads shall be utilized to contain the leak until the vehicle/equipment can be relocated and the leak addressed.
4) Avoid performing maintenance on vehicles in close proximity to exterior doorways, which may allow released fluids to migrate outdoors.
5) Have an adequate supply of appropriate spill response equipment readily available and clean up all spills and leaks immediately utilizing dry cleaning techniques (e.g. absorbents and brooms).
6) Keep maintenance areas neat and well organized. Remove dirt, debris, and used absorbent regularly.
7) Inspect maintenance areas as well as maintenance equipment on a routine basis.
8) Store vehicles, parts, and generated wastes indoors or off the ground and under cover whenever possible. When practical, provide secondary containment.
9) Promptly transfer used fluids to the proper waste container; do not leave full drip pans or other open containers around the shop. Empty and clean drip pans and containers regularly.
10) Waste liquids shall not be poured into floor drains, sinks, outdoor storm drain inlets, or other storm drains or sewer connections. Liquid wastes are to be collected in properly labeled containers and disposed of by a licensed waste hauler or other appropriate method.
11) Store leaking batteries in a sealed container and provide secondary containment, if feasible.
12) Clean all parts indoors utilizing a self-contained parts washer.
13) Do not hose down indoor service areas to storm drains or areas where it can seep into groundwater.
14) Maintain floor drains in good working order and inspect for proper function on a routine basis. Consider plugging floor drains that discharge to the storm sewer.
15) Ensure oil/water separators (if present) are maintained in proper working order and are checked on a routine basis for the presence of oil.
16) If maintenance work must be performed outdoors, adhere to the following requirements:
    - Conduct maintenance activities over an impervious surface, away from stormwater inlets.
    - Cover outdoor maintenance areas and direct stormwater run-on away from the area.
    - Use drip pans or drop cloths underneath the equipment to catch leaks and drips.
    - Have an adequate supply of appropriate spill response equipment readily available.
    - Clean all spills immediately using dry cleaning techniques (e.g. absorbents and brooms).
    - Avoid performing maintenance activities during precipitation events.
    - Limit temporary outdoor maintenance activities to a single shift/day if additional time is needed to cover the work area at the end of each day/shift.

BMP Fact Sheet

VEHICLE AND EQUIPMENT WASHING

GH-05

Not Applicable ☒ Applicable ☐

CONCERN

Vehicle and equipment washing can generate washwater that contains oil, grease, organic compounds, surfactants, phosphates, metals, and suspended solids. If vehicles/equipment are washed outdoors on impervious surfaces, dirty washwater can contaminate stormwater that ends up in waterways. Washing equipment over pervious surfaces can allow washwater to seep into the ground contaminating groundwater.

POLLUTION PREVENTION MEASURES

1) Vehicle and equipment washing should only be conducted in designated indoor wash bays that capture and recycle washwater to the extent practical.
2) Wastewater from the washing facility should be discharged to the sanitary sewer system under the authorization of a wastewater discharge permit issued by the local municipal authority.
3) The floor of indoor vehicle wash bays should be completely bermed or sloped to collect wash water and prevent migration outdoors.
4) No other activities (e.g., fluid changes, repairs, material storage) shall be performed in wash areas.
5) Keep the wash bay neat and well organized. Sweep or pick up all trash and debris daily or as needed.
6) Solid materials accumulated on vehicles or in vehicle beds (e.g. salt, soil, grass, etc.) shall be knocked off or otherwise removed from the vehicle (while inside the wash bay) prior to washing. Solid materials shall be collected and disposed of properly.
7) For vehicles too large to completely fit in the wash bays, only the portion of the vehicle physically located in the confines of the wash bay shall be cleaned. The vehicle shall then be rotated to allow for the remaining portion of the vehicle to be washed.
8) Use nozzles that automatically turn off water when not in use and consider high-pressure, low-volume sprays.
9) Avoid detergents as much as possible. If detergents are necessary, use a biodegradable, phosphate-free detergent.
10) If discharging to an oil-water separator, use a non-emulsifying detergent.
11) Inspect floor drain systems, holding tanks, and conveyances associated with designated wash areas regularly. Maintain oil/water separators and/or process flowthrough separators on a routine basis.
12) Use commercial car washes when vehicle or equipment washing cannot be performed onsite without causing impacts to stormwater.
13) If washing must occur onsite and outdoors, use a designated impervious area that is marked with posted signs indicating proper washing procedures. This area must be bermed to contain the wash water and graded to direct the wash water to the sanitary sewer, an oil-water separator, a holding tank, a dead-end sump, or other containment area. Captured water shall be disposed of properly.
14) Avoid steam cleaning and engine/undercarriage washing which can produce high pollutant concentrations. If steam cleaning or engine washing is necessary, perform such cleanings within isolated indoor areas, and ensure wash water is treated and discharged to the sanitary sewer (if permitted to do so) or captured for off-site disposal.
15) Train staff in proper washing techniques and how to confine washing to designated wash areas.
16) Consider alternatives to washing such as using air to blow grass and debris from small equipment, wet-wiping equipment with rags, etc.

BMP Fact Sheet

MATERIAL STORAGE

GH-06

Not Applicable ☒ Applicable ☐

CONCERN

The storage of petroleum products, chemicals, paints, cleaners, pesticides, fertilizers, bags of erodible materials like sand, cement, and soil, and other potential pollutants can negatively impact surface waters through the accidental releases or leaching of materials into stormwater. Unprotected outdoor storage areas can generate a wide range of stormwater pollutants, such as sediment, nutrients, toxic materials, and petroleum products.

POLLUTION PREVENTION MEASURES

1) Whenever possible, store containers (e.g. drums, bins, bags, cans, and totes) indoors or under cover to limit exposure to stormwater.
2) Designate specific areas for material delivery and storage that are away from heavy traffic areas, storm drains, stormwater conveyances, and areas of concentrated run-off.
3) Designated outdoor storage areas should be paved or consist of an impervious surface.
4) Provide secondary containment for materials whenever possible or required per regulation.
5) Store materials on pallets to prevent stormwater run-on from coming into contact with materials, prevent container corrosion, and allow for better leak detection. Pallets must be in good condition and promptly replaced once damaged or deteriorated.
6) Stack containers according to the manufacturer's recommendations to avoid damage.
7) Immediately replace damaged, corroded, or leaking containers.
8) Ensure all storage containers are clearly labeled with their contents.
9) Keep containers tightly sealed after use.
10) Maintain an accurate inventory of hazardous substances and limit on-site storage to that which is necessary to support facility operations.
11) Keep storage areas neat and well organized; remove debris and unneeded material promptly.
12) If empty drums are stored outdoors, ensure that all openings are equipped with caps to prevent water intrusion and that the drum/storage area is labeled "Empty Drums".
13) Have an adequate supply of appropriate spill response equipment readily available and clean up all spills and releases immediately utilizing dry cleaning techniques (e.g. sweeping/absorbents).
14) Clean up all migrating dry materials upon discovery and address the source of the release.
15) Provide perimeter controls (e.g., berms, rock check dams, etc.) for erodible stockpiles of materials such as mulch, sand, and gravel to prevent migration into the stormwater system.
16) Routinely inspect material storage areas for leaks, material migration, and damaged or corroded containers. Ensure that secondary containment and other perimeter controls are in satisfactory condition.
17) Additional visual inspections of outdoor storage areas should be conducted after significant rainfall events (i.e., greater than 0.5 inches).

BMP Fact Sheet

ABOVEGROUND STORAGE TANKS

GH-07

Not Applicable ☐ Applicable ☒

CONCERN

Aboveground storage tanks (ASTs) may be used to store fuels, automotive fluids, chemicals, or deicing fluids. Leaks from tanks, piping, or other equipment and releases during fluid transfers can all impact stormwater quality. It is critical to maintain ASTs in good working condition to prevent spills and/or releases from occurring. Improperly managed storage tanks can cause significant environmental impacts.

POLLUTION PREVENTION MEASURES

General *(applicable to all storage tanks)*

1) ASTs should be installed and maintained in accordance with COMAR 26.10 and applicable fire codes.
2) ASTs should be provided with secondary containment, whenever feasible or required by regulation.
3) Secondary containment areas shall be maintained clean and dry; drain valves must be kept closed; accumulated liquid shall only be discharged if there are no visible signs of impacts, and in accordance with applicable regulations.
4) Inspect ASTs monthly to identify any leaking or malfunctioning equipment and ensure tanks are functioning as designed.
5) ASTs shall be equipped with a form of liquid-level detection (i.e. sight gauge, electronic monitoring).
6) ASTs shall be equipped with overfill prevention (i.e. overfill alarm and/or overfill prevention valve).
7) Tanks and piping should be protected from vehicle impact via barriers, bollards, guard rails, etc.
8) Install ASTs on solid foundations over impervious surfaces, and away from areas of concentrated run-off, storm drains, and other stormwater conveyances.
9) Properly label all storage tanks (e.g., contents, capacity, etc.).
10) Keep remote fills and fill port spill buckets clean and dry.
11) Keep fill ports, gates, and tank areas secured when not in use to prevent fuel theft and tampering.
12) Have an adequate supply of appropriate spill response equipment readily available and clean up all spills and leaks immediately utilizing dry cleaning techniques (e.g. absorbents and brooms).
13) Facilities that maintain 1,320 gallons or more of aboveground oil products shall prepare and implement a Spill Prevention, Control, and Countermeasure (SPCC) Plan, per 40 CFR 112.
14) Facilities that maintain 1,000 gallons or more of used oil or 10,000 gallons or more of virgin oil in ASTs shall obtain an Individual Oil Operations Permit from the MDE, per COMAR 26.10.01.09.
15) Owners/Operators of facilities that maintain more than 2,500 gallons of oil in ASTs are required to register each AST with MDE, per COMAR 26.10.01.10.

Bulk Fluid Transfers (Deliveries)

1) All bulk fluid transfer operations shall be performed under the direct supervision of knowledgeable County personnel. At no time shall the delivery vehicle or delivery vehicle operator be unsupervised.
2) The product level within the tank must be measured and available capacity verified before delivery.
3) Deliveries shall be made via fill ports equipped with catch basins to capture drips and spills.
4) Ensure an adequate supply of appropriate spill response equipment is readily available.
5) Post signs in delivery area displaying proper delivery procedures and emergency contact information.

ABOVEGROUND STORAGE TANKS

Used Oil Tanks

1) County personnel must verify the level of product in used oil tanks prior to filling.
2) Used oil tanks should only be filled via designated fill ports. Pumping used oil into the tank via a closed piping system is preferred to manually pouring used oil into the tank.

Brine Tanks

1) If multiple tanks are located onsite, the tanks should be plumbed to ensure that the complete failure of one tank will not drain all the tanks in the system (tanks must be isolated).
2) Minimize seeping and leaking at fittings by properly supporting piping and fittings, using flexible connectors or hoses to reduce stress, and installing corrosion-resistant fittings.
3) Consider placing hoses in non-permeable trenches or using drip-less nozzles to reduce repeated small spills.

RESIDENT DROP-OFF CENTER

Not Applicable ☒ Applicable ☐

CONCERN

Resident Drop-Off Centers are publicly accessible facilities where residents can drop off used automotive fluids (i.e. oil or antifreeze), municipal waste, recyclable, and/or organic waste, typically free of charge. Improper transfer or management of the waste materials can allow a number of pollutants including oils and greases, toxic and chemical compounds, nutrients, metals, and other wastes to enter waterways.

POLLUTION PREVENTION MEASURES

General *(applicable to all materials collected)*

1) Clearly identify waste materials accepted by the facility, and clearly mark designated collection areas.
2) Waste material should be inspected by a County representative, prior to disposal.
3) Avoid positioning waste receptacles near storm drains, water bodies, or areas of concentrated runoff.
4) When practical, receiving areas should be covered.
5) Do not allow containers to overflow or waste materials to accumulate on the ground.

Automotive Fluid Collection

1) Used oil, antifreeze, and automotive fluid receiving areas should be on impervious surfaces, covered, and provided with secondary containment, which shall be maintained clean and dry.
2) Provide lidded waste receptacles in the receiving area for the public to dispose of empty containers. Waste receptacles shall be emptied routinely and waste disposed of properly.
3) Collection areas shall be inspected daily and all trash and spilled liquids appropriately cleaned up.
4) The available capacity of waste liquid collection containers shall be routinely verified and waste removals scheduled, as needed.
5) Install appropriate controls to prohibit the overfilling of waste fluid collection containers.
6) Place appropriate spill response equipment in close proximity to drop-off areas.
7) If aboveground tanks are used to collect waste fluids, refer to BMP Fact Sheet GHP-07 (Aboveground Storage Tanks) for additional recommendations.

Organic Debris Collection

1) Routinely transfer collected organic debris/waste to a composting or disposal facility.
2) Do not permit composting of organic waste except at properly designed and permitted facilities.
3) Enact controls to prevent leaves and other windblown debris from entering stormwater inlets.

Municipal Waste / Recyclables Collection

1) Refer to BMP Fact Sheet GHP-01 (Waste Management) for additional recommendations.

BMP Fact Sheet

STOCKPILES

GH-09

Not Applicable ☒ Applicable ☐

CONCERN

The County may stockpile various erodible materials, the type of material can vary depending on the needs of the County. Stockpiled material may include soil, sand, millings, slag, cinders, sawdust, landscaping bark, compost, etc. Exposed stockpiles can easily erode due to wind or precipitation and contribute suspended solids to stormwater runoff.

POLLUTION PREVENTION MEASURES

1) Maintain stockpiles of erodible materials within roofed storage buildings or covered storage bins, if feasible. If not, stockpile material on an impervious surface and cover the stockpile.
2) Temporary stockpiles should be placed on an impermeable membrane (tarp) for quick clean-up.
3) Locate stockpiles away from drain inlets, catch basins, swales, areas of concentrated stormwater flow, water bodies, and environmentally sensitive areas.
4) Divert stormwater flows away from/around the stockpiles using a diversion device (e.g., temporary swale, berm, sandbags, or diversion fence).
5) Cover temporary stockpiles of erodible materials with a tarp that has been adequately secured. The covers must be in place at all times when the stockpile is not in active use.
6) When accessing a portion of the stockpile, only remove a section of the cover to minimize exposure to the elements.
7) Use barriers to isolate stockpiled materials from high-traffic areas to prevent tracking of materials.
8) Sweep (do not wash or hose down) in front of material stockpile storage areas at regular intervals, following loading and unloading activities, and during times of heavy use.
9) If material is observed migrating from the stockpile, clean up all migrated material upon discovery and provide additional controls to reduce migration from the stockpile. If such measures are ineffective implement controls to capture pollutants before they migrate off-site (e.g. silt fencing, inlet filters, filter socks, at-grade inlet protection, etc.).
10) Minimize material stockpile inventory based on historical inventory/usage records and public safety operational needs.
11) Cold mix asphalt shall be stored on and covered with plastic sheeting or comparable material.
12) Routinely inspect outdoor material stockpiles to verify existing controls are functioning properly and for signs of erosion or material transport.

BMP Fact Sheet

DEICING MATERIALS

GH-10

Not Applicable ☒ Applicable ☐

CONCERN

When salt and other de-icing materials are stored outside and uncovered, they have a much higher risk of being eroded and transported offsite by stormwater. Improper de-icing material and sand storage may result in stormwater runoff containing elevated concentrations of sodium chloride and dissolved solids. Sodium chloride (e.g., road salt) is an effective deicer but can be highly corrosive to stormwater facilities. Smaller waterways are at a higher risk to increases in salinity, which can threaten aquatic species. Additionally, runoff containing sodium chloride has the potential to reach drinking water sources where small traces can adversely impact public health.

POLLUTION PREVENTION MEASURES

1) Bagged de-icing chemicals must be stored indoors. If stored outdoors bags must be kept on pallets (off the ground) and covered at all times. Bags must be intact without holes or openings.
2) Bulk de-icing materials shall be stored under cover and on an impervious surface.
3) Bulk salt storage areas/buildings shall not be overfilled so that salt spills out beyond the entrance of the storage area/building.
4) Bulk salt storage areas/buildings shall be maintained in a structurally sound condition and in a way that prevents the release of salt and the infiltration of stormwater. Deicing materials should not touch the sides of metal storage containers.
5) Barriers such as berms, gates, knee walls, tarps, and/or straw bales shall be placed at the entrances of bulk salt storage areas/buildings to prohibit the migration of salt and prevent contact with precipitation/stormwater runoff.
6) Routinely inspect storage areas for migrating materials or deterioration of containment structures. Sweep up all migrating materials upon discovery and repair the source of the migrating pollutant.
7) Loading areas should be constructed of impervious material and covered or enclosed, to the extent practical, to reduce potential contact with stormwater.
8) Minimize the distance de-icing materials are transported during loading/unloading activities.
9) Prevent and/or minimize the spillage of salt and de-icing materials during loading/unloading activities, immediately clean spilled or tracked materials.
10) Sweeping of storage and loading/unloading areas shall be conducted immediately following loading/unloading activities.
11) Do not store de-icing materials (bulk or bagged) over or immediately adjacent to drains or waterways.
12) Control site drainage by diverting stormwater run-on away from storage/loading areas using appropriate measures (e.g., curbing, berms, etc.).
13) Slope storage/loading areas to direct salt-contaminated runoff to an appropriate collection area, and in a manner that prevents the runoff from reaching adjacent soil or surface waters.
14) Excess salt shall be removed from salt handling equipment (trucks, spreaders, etc.) following use/prior to storage. All cleaning shall occur on an impervious surface, which is sloped or curbed to contain any washwater and direct it to a collection area for recycling or proper disposal.

Appendix A

GHP Site Inspection Checklist

GOOD HOUSEKEEPING PLAN (GHP)
SITE INSPECTION CHECKLIST

Facility Name: _____ **Inspection Date:** _____

Inspector Name: _____ **Inspector Signature:** _____

- The intent of this inspection is to ensure that the site is being properly maintained and that there are no visible signs of pollutants entering the stormwater system.
- **A shaded status box designates an item in a non-compliant status. Please provide an explanation for all non-compliant items and subsequently document all corrective actions performed.**
- Retain the completed checklists for five (5) years.

Item	Status			CORRECTIVE ACTIONS/COMMENTS *Items which cannot be corrected immediately must be reported to the GHP/NPDES Program Manager*
	Yes	No	N/A	
GENERAL HOUSEKEEPING				
1. Are exterior areas of the facility free of accumulated trash, debris, and unneeded materials?				
2. Are stormwater drains and inlets free from debris, sediment, and evidence of spills/releases?				
3. Is the facility free from signs of erosion?				
4. Are paved surfaces free of accumulated sediment?				
5. Is spill response equipment available in maintenance areas, fueling areas, hazardous material storage areas, and/or other required areas?				
6. Are spill kits and absorbent materials clearly labeled and accessible (i.e. items are not piled on top of or in front of spill kits)?				
7. Are spill kits secured from being stolen or misused?				
8. Is there a labeled container present for the disposal of used spill cleanup material?				

GOOD HOUSEKEEPING PLAN (GHP)
SITE INSPECTION CHECKLIST

Item	Status			CORRECTIVE ACTIONS/COMMENTS *Items which cannot be corrected immediately must be reported to the GHP/NPDES Program Manager*
	Yes	No	N/A	
9. Does spill response equipment (i.e. spill kits, absorbent materials) need to be replenished?				
WASTE MANAGEMENT				
10. Are areas around solid waste containers/roll-offs/compactors free of excessive trash accumulation or overflowing containers?				
11. Are areas around solid waste containers/roll-offs/compactors free of visible evidence (i.e. leaks, staining) of ongoing stormwater pollution?				
12. Are scrap metal containers in good order and free from evidence of leaking oil/grease?				
13. For dumpsters, roll-offs, and other waste receptacles, where leaks are observed, have appropriate controls (e.g. containment, spill response, etc.) been enacted?				
14. Are the lids (if present) to solid waste containers closed?				
15. Is street sweeping/vactor waste being managed appropriately (i.e. no evidence of material migration)?				
16. Is waste cooking grease managed appropriately (i.e. no evidence of spilled material or excessive staining)?				
VEHICLE & EQUIPMENT STORAGE				
17. Are stored vehicles/equipment free from leaks?				
18. If leaks are present, are they being managed appropriately (drip pan or other methods in place to capture released liquids)?				
19. Are storage areas free of visible evidence of chronic leaks/spills (i.e. significant staining)?				

GOOD HOUSEKEEPING PLAN (GHP)
SITE INSPECTION CHECKLIST

Item	Status			CORRECTIVE ACTIONS/COMMENTS *Items which cannot be corrected immediately must be reported to the GHP/NPDES Program Manager*
	Yes	No	N/A	
VEHICLE & EQUIPMENT REFUELING				
20. Are the areas around refueling areas free from evidence of spills or leaks?				
21. Are refueling areas free of used absorbent material that has not been swept/cleaned up?				
22. Do fuel dispensers and hoses appear to be in good working order and well-maintained?				
VEHICLE MAINTENANCE				
23. Is there any indication that vehicle maintenance activities are being conducted outdoors?				
24. Is there any indication that vehicle maintenance activities are contributing to stormwater pollution?				
VEHICLE & EQUIPMENT WASHING				
25. If performed on-site, does all vehicle/equipment washing occur indoors?				
26. Is wash water collected and disposed of properly?				
27. Is there any indication that vehicle/equipment wash water is being released to stormwater conveyances or pervious areas?				
MATERIAL STORAGE				
28. Are all outdoor storage areas free from visible signs of leaks or spilled material?				
29. Are material storage containers in good condition?				

GOOD HOUSEKEEPING PLAN (GHP)
SITE INSPECTION CHECKLIST

Item	Status			CORRECTIVE ACTIONS/COMMENTS *Items which cannot be corrected immediately must be reported to the GHP/NPDES Program Manager*
	Yes	No	N/A	
30. Are drums, totes, and other containers (that are <u>not</u> empty) stored off the ground and covered, or stored indoors?				
31. Are liquid-containing drums/totes located outdoors provided with secondary containment?				
32. Are containers that are located outdoors equipped with closed lids except when material transfers are occurring?				
33. Are materials, which could impact stormwater, stored away from heavy traffic areas, or protected from vehicle collisions?				
34. Are chemical storage containers properly labeled?				
35. If empty drums are stored outside, are all openings equipped with caps to prevent water intrusion?				
ABOVEGROUND STORAGE TANKS				
36. Are all storage tanks, and surrounding areas free from visible signs of leaks or spilled material?				
37. Do storage tanks appear to be in good working order (e.g. free of obvious signs of damage or malfunctioning equipment)?				
38. Are remote fills associated with tanks free of liquid and debris?				
RESIDENT DROP-OFF CENTERS				
39. Are waste collection areas clearly identified?				
40. Are used oil/antifreeze collection tanks, containment structures, and surrounding areas free from visible signs of leaks or spilled material?				

GOOD HOUSEKEEPING PLAN (GHP)
SITE INSPECTION CHECKLIST

Item	Status			CORRECTIVE ACTIONS/COMMENTS *Items which cannot be corrected immediately must be reported to the GHP/NPDES Program Manager*
	Yes	No	N/A	
41. Do used oil/antifreeze collection tanks appear to be in good working order (e.g. free of obvious signs of damage or malfunctioning equipment)?				
42. Are empty used oil/antifreeze containers being collected and disposed of in the trash?				
43. Are areas around waste/recyclables containers free of excessive trash accumulation or overflowing containers?				
44. Are areas around waste/recyclables containers free of visible evidence (i.e. leaks, staining) of ongoing stormwater pollution?				
45. Are organic debris collection areas free of visible evidence of ongoing stormwater pollution (e.g. leaves and debris in stormwater conveyances)?				
STOCKPILES				
46. Are material piles, including salt, soil, sand, and millings isolated (i.e. covered, bermed, etc.) to prevent stormwater run-on and run-off?				
47. Are areas surrounding material piles (e.g. salt, soil, sand, millings, etc.) free of tracked or migrated material?				
DEICING MATERIALS				
48. Are all deicing materials stored indoors or undercover?				
49. Are salt storage structures in good condition (e.g. no evidence of material escaping or stormwater infiltration)?				
50. Is the salt loading area clean?				

GOOD HOUSEKEEPING PLAN (GHP)
SITE INSPECTION CHECKLIST

Item	Status			CORRECTIVE ACTIONS/COMMENTS *Items which cannot be corrected immediately must be reported to the GHP/NPDES Program Manager*
	Yes	No	N/A	
51. If deicing materials are tarped, is the tarp secure and covering the entire pile?				
52. Are bags of salt stored indoors, or off the ground and covered?				

ADDITIONAL COMMENTS:

Appendix B

GHP Stormwater Conveyance System Inspection Checklist

GOOD HOUSEKEEPING PLAN (GHP)
STORMWATER CONVEYANCE SYSTEM INSPECTION CHECKLIST

Facility Name: _____ **Inspection Date:** _____

Inspector Name: _____ **Inspector Signature:** _____

- The intent of this inspection is to ensure the free flow of stormwater within on-site conveyance systems and prevent damage/flooding.
- **If maintenance is needed, please provide an explanation, and document all corrective actions performed.**
- **Inspections shall include visually accessible infrastructure only; at no time shall inspection personnel enter a confined space.**
- Retain the completed checklists for five (5) years.

Item	Item Checked (Y/N/NA)	Maintenance Needed (Y/N)	CORRECTIVE ACTIONS/COMMENTS *Items which cannot be corrected immediately must be reported to the GHP/NPDES Program Manager*
CATCH BASINS / INLETS			
1. Look for debris and sediment blocking catch basin grates. If found, remove.			
2. Look for damage or cracks to the frame, grate, basin walls or bottom. If found, schedule repairs or replacement.			
3. Look for sediment and debris in the catch basin sump. If sediment fills 60% of the sump or comes within 6” of a pipe it should be scheduled for cleaning.			
4. If any type of filtering device is present, verify that the filter is not clogged, torn, or damaged; clean if clogged, replace if damaged.			
PIPES / CULVERTS			
5. Look for evidence of clogged piping (e.g. visual obstructions, standing water within manholes/inlets structures, etc.). If found, remove or schedule cleaning.			
6. Verify vegetation growth, if present, does not impede water flow. If it does, mow, cut back, or remove.			

GOOD HOUSEKEEPING PLAN (GHP)

STORMWATER CONVEYANCE SYSTEM INSPECTION CHECKLIST

Item	Item Checked (Y/N/NA)	Maintenance Needed (Y/N)	CORRECTIVE ACTIONS/COMMENTS *Items which cannot be corrected immediately must be reported to the GHP/NPDES Program Manager*
7. Inspect for damaged piping, inlets, outlets, headwalls, wingwalls, or excessive erosion. If found, make or schedule repairs.			
DITCHES / TRAPEZOIDAL SWALES			
8. Check for erosion, slumping, or undercutting. If found, make or schedule repairs.			
9. Look for trash and sediment accumulation. Remove all trash and remove sediment if it will impede water flow or clog downstream structures.			
10. Verify vegetation growth does not impede water flow. If it does, mow, cut back, or remove. Remove any trees or shrubs growing within the ditch.			
11. Check the integrity of check dams, filter socks, or other flow dissipation/filtering devices within the ditch or swale. Perform or schedule service if they are clogged, damaged, or deteriorated.			
12. Check inlets and outlets for debris accumulation, damage, or erosion. If found, make or schedule repairs.			

ADDITIONAL COMMENTS:

GUIDANCE DOCUMENT
GOOD HOUSEKEEPING PLAN - STORMWATER CONVEYANCE INSPECTIONS

INTRODUCTION

Maintaining catch basins, stormwater inlets, and other stormwater conveyance structures on a regular basis will remove pollutants, prevent backups, and ensure the system functions as intended to avoid flooding.

Each GHP-covered facility is required to conduct routine stormwater conveyance system inspections to ensure the free flow of stormwater within the conveyance system(s). The GHP includes a *"GHP Stormwater Conveyance System Inspection Checklist"*, to be used when completing the required inspections. This document provides additional background and guidance to aid facility personnel in completing the inspections.

CATCH BASINS / INLETS

Catch basins and inlets are all points for stormwater to enter storm drain systems. These structures are typically part of a larger conveyance system with many interconnected components where the impairment of one component can compromise the functionality of the larger system. Inlets and catch basins are subject to functional impairment by a variety of conditions, including:

- Structural damage including from vehicles and plows
- Cracks/joint separation at piping (inlet and outlet) connections
- Leaking due to cracks and joint separation
- Missing or damaged grates and grate frames
- Corrosion
- Blockage caused by debris, sediment, vegetation, or other objects

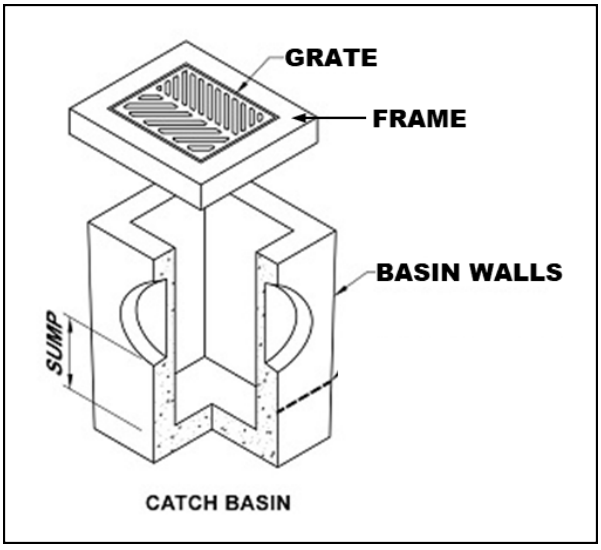

Figure 1 – Catch Basin Diagram

The following photos provide additional information related to the various inspection items, including examples of typical issues that may be encountered. The photo numbers correspond to the inspection checklist item number.

Inspection Item #1 [1]



Debris and sediment blocking inlet/catch basin grate.

Inspection Item #2 [2]



Damaged Grate

Inspection Item #2 [3]



Damaged Frame

Inspection Item #2 [4]



Failing brick walls with a stormwater inlet.

Inspection Item #2 [5]



Failing asphalt surrounding the inlet

[1] Grand Valley State University - https://www.gvsu.edu/groundswell/clogged-storm-drains-71.htm
[2] Georgia Department of Transportation – Stormwater System Inspection and Maintenance Manual, March 2020
[3] https://catchbasinauthority.ca/catch-basin-101/
[4] https://www.fixasphalt.com/catch-basin-repairs
[5] https://ccpia.org/catch-basin-and-manhole-inspections/

Inspection Item #3 [6]



Sediment and debris inside stormwater inlet

Inspection Item #3

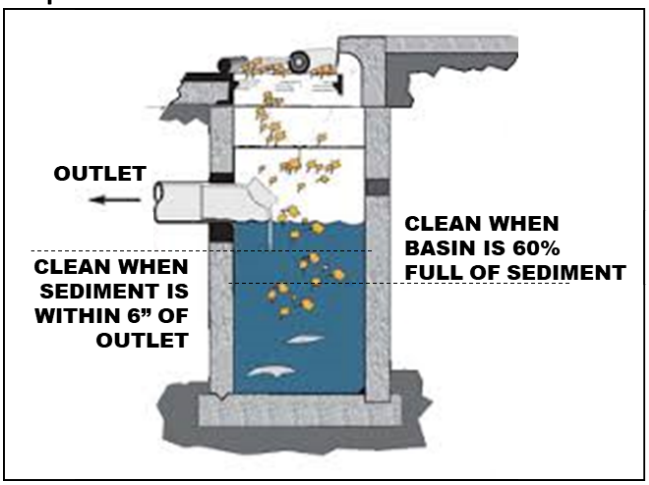

Remove sediment from a catch basin if it fills 60% of the sump or comes within 6" of a pipe.

Inspection Item #4 [7]



Example of inlet filter. Replace when filled or damaged. damaged.

Inspection Item #4 [8]



Example of an inlet filter sock, replace if

PIPES AND CULVERTS

Pipe systems are designed to convey stormwater runoff safely and effectively from inlets to various discharge points and outfalls. A culvert is a structure that channels water under an obstacle such as a roadway or railroad. These structures are subject to functional impairment by a variety of conditions, including:

- Blockage or obstruction due to build up of vegetation, debris, sediment, or other objects
- Cracks and/or joint separation
- Collapsed pipe
- Corrosion
- Root intrusion
- Lack of stabilization

[6] https://www.fixasphalt.com/catch-basin-repairs
[7] https://store.interstateproducts.com/products/Ultra-Drain-Guards/Ultra-Drain-Guard-Adjustable-Frame-Model
[8] https://www.newpig.com/pig-sediment-filter-sock/p/FLT787

Inspection Item #5 [9]



A pipe filled with sediment, inhibiting flow.

Inspection Item #5 [10]



Standing water around an inlet may indicate a blockage.

Inspection Item #6 [11]



Pipe conveyance filled with vegetation.

Inspection Item #7 [12]

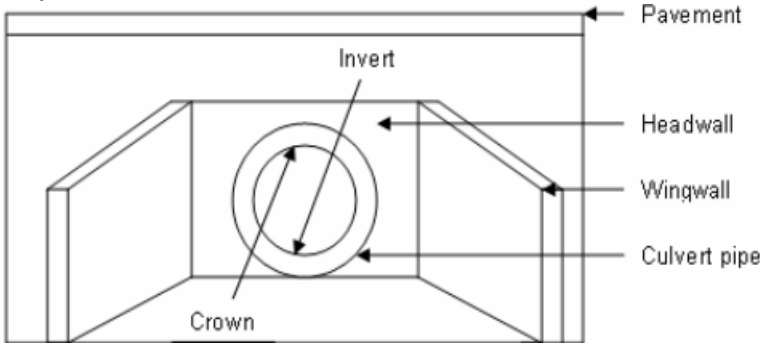

Diagram depicting various components of a culvert.

[9] Georgia Department of Transportation – Stormwater System Inspection and Maintenance Manual, March 2020
[10] https://www3.epa.gov/region9/water/npdes/stormwater-feature.html
[11] Georgia Department of Transportation – Stormwater System Inspection and Maintenance Manual, March 2020
[12] https://www.researchgate.net/figure/Components-of-a-Culvert_fig34_228685906

Inspection Item #7 [13]



A crack is the culvert headwall.

Inspection Item #7 [14]



Evidence of erosion around a culvert.

DITCHES AND SWALES

Ditches and swales serve similar functions. Both are used to convey stormwater. However, there are slight differences. A ditch is a narrow channel typically found along roads and at the edges of parking lots/driveways. A swale is like a ditch, but it is broad and shallow, and usually covered or lined with turfgrass or stone. Issues associated with these structures, which could impede their function include:

- Blockage or obstruction due to vegetation, debris, sediment, or other objects
- Erosion
- Rapidly moving water
- Lack of adequate vegetative cover for grass-lined channels

Inspection Item #8 [15]



Erosion and slumping within a drainage ditch.

Inspection Item #8 [16]



Slumping within a drainage swale.

[13] https://www.sbt-durabi.org/articles/xml/ARN0/
[14] https://lufkindailynews.com/news/local/culverts-crumbling-in-precinct-1/article_a9fed902-4379-5248-ab11-7471e2974298.html
[15] https://graniteseed.com/blog/how-to-stop-a-ditch-from-eroding/
[16] https://www.mnwcd.org/erosion-control

Inspection Item #9 [17]



Litter and debris within a ditch.

Inspection Item #9 [18]



Litter and debris within a swale.

Inspection Item #10 [19]



Cracks and joint separation in concrete channels, removal of vegetation may prevent future damage.

Inspection Item #11 [20]



Rock check dam across a channel.

Inspection Item #11 [21]



Filter sock check dams across a grass swale.

[17] https://craven.ces.ncsu.edu/2023/02/for-those-who-love-to-litter/
[18] https://www.cityoftulsa.org/government/departments/public-works/stormwater-quality/adopt-a-stream/
[19] Georgia Department of Transportation – Stormwater System Inspection and Maintenance Manual, March 2020
[20] EPA Stormwater Best Management Practice, Check Dams, December 2021
[21] EPA Stormwater Best Management Practice, Check Dams, December 2021

Inspection Item #12 [22]



Inlet to a rock-lined swale.

Inspection Item #12 [23]



Sediment accumulation at swale inlet.

END OF DOCUMENT

[22] https://www.stormwater.com/erosion-control/vegetation-management/article/13016118/inlet-protection-during-constructionand-after

[23] https://www.stormwater.com/erosion-control/vegetation-management/article/13016118/inlet-protection-during-constructionand-after

Appendix C

General Spill Response Procedures

SPILL RESPONSE AND NOTIFICATION PROCEDURES

A. Discovery of a Spill

1. Upon discovery of a spill, facility personnel should immediately assess the situation and determine if the spill is considered a "Minor" or "Major" spill. For a spill to be considered "Minor" all the following conditions must be satisfied:

    - ❖ The type of material spilled is known;
    - ❖ The spill is confined to the immediate work area;
    - ❖ The spill has not reached storm drains, sanitary sewer systems, open water, or surrounding soils;
    - ❖ The spill can be safely managed;
    - ❖ The employee can contain and clean up the spill with the PPE that is normally used in the work area;
    - ❖ The spill does not pose a serious threat of fire or an explosion; and
    - ❖ The spill does not pose conditions that are immediately dangerous to life or health.

2. If all the above conditions are met, the spill is considered "Minor". Refer to ***Section B*** of this document for appropriate response actions.

3. If all the above conditions are not met, then the spill is considered "Major". Refer to ***Section C*** of this document for appropriate response actions.

4. If a spill involves flammable liquids, ignitable vapors may be present - precautions must be taken to prevent ignition. Do not turn on or off equipment since sparks may be generated. Additionally, avoid the movement of equipment that could create static electricity. Larger spills of flammable liquids could pose a fire threat and would be considered a "Major" spill. Refer to ***Section C*** for appropriate actions.

B. Response to a "Minor" Spill

1. Identify the source of the spill and the direction in which the spill is heading.

2. Attempt to stop the spill at the source. Where applicable, the source of the spill shall be taken out of service until repairs can be made. If the spill is related to a fuel dispensing system, activate the Emergency Shut-Off (ESO) switch to prevent additional fuel disbursements.

3. If material is released outside a containment area, it is crucial that the material be contained as quickly as possible. Following proper safety procedures, use absorbent materials or diking to contain the spill. Prevent the spill from reaching storm drains, sanitary sewers, or open water. If a spill is flowing toward a drain, install temporary diking around the drain, block off the drain with a drain cover, or place absorbent material around the drain to prevent a discharge.

4. Once the spill has been stopped and contained, estimate the quantity of the spill. Consult applicable Safety Data Sheet (SDS) for material compatibility and environmental precautions. Note and follow recommendations regarding special precautions, spill response equipment, methods, or precautions. All cleanup work shall be conducted in accordance with existing safety protocols and SDS recommendations. Contact the facility Superintendent/Supervisor, or designee, for assistance if needed.

5. Recover or clean up the spilled material as much as possible. Material that cannot be reused must be discarded in accordance with state and federal regulations. Liquids absorbed by porous materials (e.g., wood, gravel, significant quantities of absorbent material, etc.) shall be placed into US DOT-approved 30-gallon or 55-gallon steel drums. Following cleanup, the container shall be secured and appropriately labeled to identify the contents and the date of the spill/cleanup. Containers shall be stored indoors and provided with secondary containment until transported off-site for disposal.

6. For spills that do not involve flammable liquids or other potential hazardous wastes, small quantities of used absorbent materials may be double bagged and disposed of along with municipal trash as long as all liquids have been absorbed (no free liquid may be present).

7. If the spilled material is a flammable liquid, corrosive liquid (pH ≤ 2 or ≥ 12.5), or other potential hazardous waste, all recovered product, impacted material, and used absorbent must be placed into a US DOT-approved containers/drums. Following cleanup, the container(s) shall be secured and appropriately labeled to identify the contents and the date of the spill/cleanup. Containers shall be stored indoors and provided with secondary containment until transported off-site for disposal. The facility Superintendent/ Supervisor, or designee shall be notified that a potential hazardous waste was released and that a waste characterization may be needed to facilitate proper disposal.

8. Surfaces that are contaminated by the spill shall be cleaned utilizing dry absorbent material. Tools and equipment that have been used in the cleanup must be decontaminated immediately after use. Decontamination water (if used) must be minimized, containerized, and disposed of properly.

9. If waste requires disposal, notify the facility Superintendent/Supervisor, or designee who will arrange for the proper characterization and disposal of any waste material. Representative sampling and analysis may be necessary to properly characterize the waste. The waste must be transported and disposed of in compliance with all applicable laws and regulations. Waste manifests, trip tickets, or bills of lading (if required) for waste disposal shall be kept on file.

10. Facility personnel shall restock/replace spill response equipment and absorbent materials used during the clean-up efforts.

11. The facility Superintendent/Supervisor, designee, or other appropriate County personnel shall be notified of the spill in accordance with ***Section D*** of this document.

C. Response to "Major" Spill

A "Major" spill is any discharge that does not meet the definition of a "Minor" spill. Any employee or contractor observing, being involved with, or recognizing a potential or actual spill of oil or other hazardous material, other than a "Minor" spill is responsible for performing the following actions:

1. If there is no danger to human health, attempt to stop and contain the spill at the source. If the spilled material is unknown, if PPE other than that which is typically used in your work area, is necessary to approach the spill area, or if assistance is required to stop the spill, do not attempt to contain the spill. If the spill is related to a fuel dispensing system, activate the Emergency Shut-Off (ESO) switch.

2. Most County employees lack the appropriate training to respond to "Major" spills. If the spill is of an unknown substance, is of a quantity that cannot be safely managed, or poses other risks beyond the training level of the employee, the employee should not attempt to contain or clean up the spill.

3. Evacuate individuals from the area and keep personnel away from the impacted area.

4. Immediately notify the facility Superintendent/Supervisor, or designee of the incident. The notified individual will determine the need for further evacuations and contact emergency response personnel (911), as necessary. *If a situation represents an immediate and grave danger to personnel, the public, structures, or other infrastructure, the individual discovering the incident may call 911 directly without first notifying facility management.*

5. The facility Superintendent/Supervisor or designee will determine if assistance from emergency response contractors is required to clean up the incident and will coordinate such spill response efforts with spill response contractors and other County agencies and first responders.

6. Facility personnel will provide assistance to emergency responders, as appropriate.

D. Reporting a Spill (Internal Notifications)

1. Once a spill is contained and cleanup operations have been initiated, the individual discovering the spill shall notify the appropriate County representatives and provide the following information:

    a) Identify the location, date, and time of the incident;
    b) Identify the type of material spilled or discharged;
    c) Estimate the quantity spilled and the rate of the spill;
    d) Identify the cause of the spill or discharge;
    e) Identify impacted media or infrastructure (soil, storm drains, open water bodies, etc.);
    f) Determine the extent of injuries involved; and
    g) Provide response measures implemented by the facility personnel.

E. Reporting a Spill (Regulatory Notifications)

State of Maryland Reporting Requirements (COMAR 26.10.01.05)

1. Upon discovery of a spill, the Responsible Person shall notify the MDE Emergency Response Division **within two (2) hours** by calling 866-633-4686. The caller shall be prepared to provide the following information:

    a) The time and date of the spill;
    b) The location and cause of the spill;
    c) The mode of transportation or type of facility involved;
    d) Type and quantity of oil spilled;
    e) Details regarding any assistance required;
    f) The name, address, and telephone number of the person making the report; and
    g) Any other pertinent information requested by the Department.

2. MDE will provide further guidance on additional responsibilities.

3. Within **ten (10) working days** of the completed removal and clean-up activities, the Responsible Person shall prepare a report using either County letterhead detailing the incident. The report shall contain the following:

    a) Date, time, and place of the spill;
    b) The amount and type of oil or hazardous substance spilled;
    c) A complete description of circumstances that contributed to the spill;
    d) A complete description of the containment and removal operations performed, including disposal sites to which oil refuse was transported;
    e) Procedures, methods, and precautions instituted to prevent the recurrence of an oil spill from the facility involved;
    f) Any other information considered necessary or required by the MDE for a complete description of the incident; and
    g) A certification that the information provided is true and correct to the knowledge of the person signing the report.

4. The completed report shall be submitted to mdeerd.mema@maryland.gov or faxed to 410-537-3932.

5. A digital copy of the completed report and any accompanying documentation shall be retained

Federal Reporting Requirements - National Response Center (40 CFR 110)

1. If any of the following criteria are met the Responsible Person shall notify the National Response Center (NRC) **within two (2) hours** of the spill discovery by calling 800-424-8802 or 202-426-2675.

    - ❖ The spill has caused a film, sheen, or discoloration of the surface water or shorelines;
    - ❖ The material spilled will violate applicable water quality standards (surface water or groundwater); or
    - ❖ The spill has caused a sludge or emulsion to be deposited beneath the surface of the water or on the shoreline.

2. At a minimum, the following information shall be provided to the NRC:

    a) Name, organization, and telephone number of reporting party;
    b) Name and address of the responsible party;
    c) Date, time, and location of the incident;
    d) Source and cause of the discharge;
    e) Type of material(s) discharged;
    f) Quantity of materials discharged;
    g) Danger or threat posed by discharge;
    h) Number and types of injuries (if any);
    i) Weather conditions at the incident location; and
    j) Other information to help emergency personnel respond to the incident.

3. If unable to report to the NRC, reports can be made to the EPA Regional Office at 800-438-2474 or the U.S. Coast Guard (USCG) at 202-372-1001. The NRC, EPA, or USCG will provide further guidance.

4. A digital record of the NRC notification and any accompanying documentation shall be retained on-site.

Federal Reporting Requirements - EPA Regional Administrator (40 CFR 112.4)

1. If the facility where the spill occurred is regulated under 40 CFR 112 and is required to have a Spill Prevention, Control, and Countermeasures (SPCC) Plan, the Responsible Person shall report the spill to the EPA Region III Administrator when any of the following criteria are met:

   - ❖ More than 1,000 gallons of oil is discharged to navigable waters or adjoining shorelines in a single incident; or
   - ❖ More than 42 gallons of oil is discharged to navigable waters or adjoining shorelines in each of two incidents occurring within any twelve-month period.

2. The report shall be made in writing **within 60 days** of the spill and shall contain:

   a) Name and location of the facility;
   b) Owner/operator name;
   c) Maximum storage/handling capacity of the facility and normal daily throughput;
   d) Corrective actions and countermeasures taken;
   e) Adequate description of the facility including maps, and flow diagrams;
   f) Cause of the discharge to navigable waters, including a failure analysis;
   g) Additional preventative measures taken or planned to minimize discharge reoccurrence; and
   h) Other information required by the EPA Regional III Administrator.

3. The report shall be submitted to the EPA Regional Administrator at the following address:

   EPA Regional Administrator
   US EPA Region 3
   1650 Arch Street (3RA00)
   Philadelphia, PA 19103-2029

4. A copy of the report shall be retained in the facility SPCC Plan.

Appendix D

Training Records

GOOD HOUSEKEEPING PLAN (GHP)
TRAINING ATTENDANCE LOG

FACILITY NAME: _____

DATE	NAME *(PRINT)*	SIGNATURE

By signing I affirm that I have completed the required annual training; and I am aware of and understand my responsibilities under this Plan.

GOOD HOUSEKEEPING PLAN (GHP)

Transit Link Operations Center
1311 Abingdon Road
Abingdon, MD 21009

June 30, 2025

TABLE OF CONTENTS

1.0 BACKGROUND & INTRODUCTION 1
1.1 Objectives 1
1.2 Potential Stormwater Pollutants 1
2.0 RESPONSIBILITIES 3
2.1 GHP Implementation 3
2.2 Plan Review and Modification 3
2.3 Inspections 3
2.3.1 GHP Site Inspections 3
2.3.2 Conveyance System Inspections 4
2.4 Training 4
3.0 BEST MANAGEMENT PRACTICES (BMPs) 5
3.1 Applicability of BMP Fact Sheets 5
3.2 BMP Fact Sheets 5

List of Tables

TABLE 1-1 POTENTIAL STORMWATER POLLUTANTS AND THEIR SOURCES 2

List of BMP Fact Sheets

GH-01 - Waste Management
GH-02 - Vehicle and Equipment Storage
GH-03 - Vehicle/Equipment Refueling
GH-04 - Vehicle Maintenance
GH-05 - Vehicle/Equipment Washing
GH-06 - Material Storage
GH-07 - Aboveground Storage Tanks
GH-08 - Resident Drop-Off Centers
GH-09 - Stockpiles
GH-10 - Deicing Materials

Appendices

Appendix A: GHP Site Inspection Checklist
Appendix B: GHP Stormwater Conveyance Inspection Checklist
Appendix C: General Spill Response Procedures
Appendix D: Training Records

List of Acronyms

AST	-	Aboveground Storage Tank
BMP	-	Best Management Practice
CFR	-	Code of Federal Regulations
GHP	-	Good Housekeeping Plan
MDE	-	Maryland Department of the Environment
MS4	-	Municipal Separate Storm Sewer System
NPDES	-	National Pollutant Discharge Elimination System
SPCC	-	Spill Prevention, Control, and Countermeasure Plan

1.0 BACKGROUND & INTRODUCTION

Polluted stormwater runoff has the potential to enter the County's storm sewer systems (referred to as a municipal separate storm sewer system or MS4), and then discharge, untreated, into local water bodies. To address this potential stormwater pollution, the County is required to obtain a NPDES permit from the Maryland Department of the Environment (MDE). The NPDES Permit requires the County to take actions to prevent stormwater pollution, maintain storm sewer systems, monitor stormwater discharges, and develop and implement comprehensive management programs to minimize the discharge of pollutants from the storm sewer system.

To comply with Part IV.D.4.b of the County's Phase I MS4 Permit, the County must develop, implement, and maintain a Good Housekeeping Plan (GHP) for certain County-owned properties not required to be covered under Maryland's General Permit for Discharges from Stormwater Associated with Industrial Activities *(General Permit 12-SWA / 20-SW).*

To support this effort, a *"Good Housekeeping Plan Applicability Certification"* has been developed to evaluate and document if a specific County-owned facility is subject to the GHP requirements. The *"GHP Applicability Certification"* includes the following ten (10) potential stormwater polluting activities. If any of the covered activities are performed at the facility, then that facility is required to implement a site-specific GHP. The GHP will include each of the potential stormwater polluting activities identified in the *"GHP Applicability Certification"* and corresponding pollution prevention procedures.

- Waste Management
- Vehicle and Equipment Storage
- Vehicle/Equipment Refueling
- Vehicle Maintenance
- Vehicle/Equipment Washing
- Material Storage
- Aboveground Storage Tanks
- Resident Drop-Off Center
- Stockpiles
- Deicing Materials

1.1 Objectives

The GHP was developed to outline suitable practices, procedures, and protocols, or Best Management Practices ("BMPs") for reducing and/or preventing stormwater pollution associated with operations at covered County-owned properties. The intent of the pollution prevention procedures included in the GHP is to limit the release of materials with the potential to impact stormwater, this includes reducing or eliminating (to the extent practical):

- The occurrence of spills and leaks;
- The accidental dumping or release of materials;
- The accumulation of waste, trash, debris, unused parts/equipment, etc.;
- The exposure of hazardous materials to precipitation/run-off;
- Stormwater run-off contamination by improperly stored materials; and/or
- Illicit discharges to the storm drain system.

1.2 Potential Stormwater Pollutants

Table 1-1 on the following page provides a list of common potential pollutants that may result from the GHP-regulated activities identified above. Understanding the sources of these pollutants can help in achieving the goals and objectives of the GHP program.

TABLE 1-1 POTENTIAL STORMWATER POLLUTANTS AND THEIR SOURCES

		Waste Management	Vehicle/Equipment Storage	Vehicle/Equipment Refueling	Vehicle Maintenance	Vehicle/Equipment Washing	Material Storage	Aboveground Storage Tanks	Resident Drop-Off Center	Stockpiles	Deicing Materials
Pollutants	**Sources**	**Associated GHP Activity**									
Sediment	Land disturbance; erosion; paved surfaces; material stockpiles; waste storage; salt/abrasive application	X				X	X		X	X	X
Hydrocarbons *(petroleum compounds)*	Leaking vehicle and equipment; vehicle and equipment cleaning; spills; improper storage; maintenance activities; scrap metal disposal; improper disposal	X	X	X	X	X	X	X	X		
Metals	Vehicle brake and tire wear; vehicle/equipment exhaust; batteries; galvanized metal; paint and wood preservatives; fuels, pesticides, and cleaners; vehicle fueling, maintenance, and washing; industrial waste	X	X	X	X	X	X	X	X		
Toxic Chemicals	Pesticide application; improper chemical storage; leaks and spills from storage containers; leaking vehicles; maintenance activities	X	X		X	X	X	X	X		
Chlorides	De-Icing chemicals										X
Trash/Debris	Improper waste storage and disposal; leaking trash containers; littering; poor housekeeping	X	X				X		X		
Nutrients (nitrogen and Phosphorus)	Fertilizers; malfunctioning septic systems; sewer overflows; animal/pet waste; vehicle washing; decaying grass and leaves; leaking trash containers; atmospheric deposition	X				X	X		X		

2.0 RESPONSIBILITIES

2.1 GHP Implementation

A separate GHP is required for each covered facility. The following individual *(identified by name and/or title)* is accountable for the administration and implementation of the GHP at this facility and has the authority to commit the necessary resources to implement this Plan.

_____

Name and/or Title of Responsible Person

The Responsible Person listed above shall ensure that facility personnel involved in any GHP-covered activities identified in this Plan, are provided with access to, and are familiar with, the contents of this Plan.

2.2 Plan Review and Modification

The *"GHP Applicability Certification"* completed for this facility must be reviewed and updated once every permit term, or within one (1) year of substantial changes to a facility's operations that could reasonably contribute to stormwater pollution. Any newly constructed/acquired facility must be assessed within one (1) year of initiating operations at the facility. The facility's GHP must be amended and reissued to the facility within one (1) year of any changes to the facility's *"GHP Applicability Certification"*.

When warranted, the BMP Fact Sheets provided in Section 3.0 may need to be updated or revised. At the same time, additional BMP Facts Sheets may be added. The need for such updates or modifications will be at the discretion of the County's GHP Program Administrator.

2.3 Inspections

The County's MS4 permit requires each facility covered by a GHP to have the following:

1. Written procedures for annually assessing County properties to prevent the discharge of pollutants, spills, and leaks into the County's storm sewer system; and

2. Written procedure for performing stormwater conveyance system inspections and for removing debris that may cause clogging, backups, and flooding.

To meet these requirements, each facility that is covered by a GHP will be required to complete routine site inspections and stormwater conveyance system inspections as detailed below. Facility management will be responsible for ensuring the necessary inspections are completed within the required timeframes, that corrective actions (if needed) are performed, and that records of inspections and completed corrective actions are maintained for at least five (5) years.

2.3.1 GHP Site Inspections

The GHP Site Inspection will be performed to ensure that each GHP-covered facility is being properly maintained and that there are no visible signs of pollutants entering the stormwater system. GHP facilities shall utilize the *"GHP Site Inspection Checklist"*, provided in ***Appendix A*** to complete the required inspection. At a minimum, each facility is to be inspected every five (5) years.

2.3.2 Conveyance System Inspections

Stormwater conveyance systems are generally comprised of curbs and gutters, catch basins, inlet structures, swales, channels, piping, culverts, detention ponds, outfalls, or other structures that are used to collect, contain, and convey stormwater runoff.

The unimpeded movement of stormwater through conveyance systems is critical in avoiding backups and flooding, which can impede facility operations and damage property. Routine inspections and preventative care of stormwater conveyance systems can ensure these systems function as intended and prevent the need for costly and time-consuming repairs and retrofits.

Each GHP-covered facility is required to conduct routine stormwater conveyance system inspections to ensure the free flow of stormwater within the conveyance systems. GHP-covered facilities shall utilize the *"GHP Stormwater Conveyance System Inspection Checklist"*, provided in ***Appendix B*** to complete the required inspections. At a minimum, facility conveyance system inspections are to be conducted every five (5) years.

2.4 Training

As part of the GHP requirements within the County's Phase I NPDES permit, annual training must be provided to all appropriate staff and contractors. Such training shall be provided to any individuals responsible for implementing the GHP, performing the required inspections, or involved in any of the GHP-covered activities identified in this Plan. The required training shall focus on the duties and responsibilities assigned to site personnel in implementing the GHP and the best management practices (BMPs) prescribed in this Plan for preventing, reducing, and eliminating the discharge of pollutants during facility activities.

The County's MS4/GHP Program Coordinator will be responsible for developing the required training and disseminating it to GHP-covered facilities. Each GHP-covered facility will be responsible for identifying staff/contractors who must attend annual training, ensuring identified staff complete the required training, and maintaining records that document training dates and attendees. Training records and other documentation shall be maintained in ***Appendix D*** of this Plan.

3.0 BEST MANAGEMENT PRACTICES (BMPs)

This section contains a BMP Fact Sheet for each of the ten (10) GHP-regulated activities. The County's operations are not limited to the BMPs contained within this document; nor is the County required to implement all of the pollution prevention measures identified within each BMP Fact Sheet. The County should select and implement those measures that are applicable and have the greatest potential for reducing stormwater pollution.

The BMP Fact Sheets contained within this document offer recommended protocols for a particular activity. These pollution prevention measures are considered non-structural BMPs with a focus on source control of potential pollutants.

3.1 Applicability of BMP Fact Sheets

The *"GHP Applicability Certification"* completed for this facility has identified the activities conducted at this facility that require coverage under this Plan. Each of the BMP Fact Sheets shall be marked as to whether they are applicable or not applicable to this facility. The Applicable/Not Applicable indicator on each BMP Fact Sheet can be revised in response to changes in operations at the facility.

3.2 BMP Fact Sheets

BMP Fact Sheets can be found on the following pages. For the sake of consistency, the general outline of a BMP Fact Sheet will be as follows:

- Identification of GHP-covered activity.
- Applicability of the BMP Fact Sheet to the facility.
- A general description of the concern the activity poses to stormwater.
- Recommended pollution prevention measures for reducing/eliminating stormwater pollution.
- Additional sources of information, if applicable.

WASTE MANAGEMENT

Not Applicable ☒ Applicable ☐

CONCERN

Improperly managed waste can allow trash and debris to be washed into storm drains which poses a concern to water quality, marine life, and public health. It also has the potential to create obstructions in the drainage system, which can lead to backups and flooding. Additionally, improper storage and handling of waste materials can allow pollutants including oils and greases, toxic and chemical compounds (including nutrients), bacteria, metals, and other potentially hazardous wastes to enter waterways.

POLLUTION PREVENTION MEASURES

General *(applicable to all waste management activities)*

1) Provide suitable containers, preferably with working covers, to collect waste materials.
2) Ensure that appropriate waste containers are available in areas where waste is generated.
3) Provide a cover over waste storage areas, if feasible.
4) Avoid positioning waste receptacles near storm drains, water bodies, or areas of concentrated runoff.
5) Ensure that lids to waste containers *(if present)* are kept closed to prevent the intrusion of precipitation and prevent trash from blowing out of the receptacle.
6) For waste receptacles, which do not have lids and could leak, containers should be inspected regularly and controls (e.g., containment, spill response, etc.) shall be enacted whenever leaks or dry-weather discharges are observed.
7) Routinely inspect waste containers, roll-offs, compactors, and other waste receptacles for the presence of excessive waste accumulation and overflowing containers.
8) Ensure that wastes accumulating on the ground are placed in a suitable waste container.
9) Ensure that wastes are removed from the facility regularly by a licensed and contracted vendor.
10) Repair or replace damaged waste container lids.

Trash Compactors

1) Routinely inspect trash compactors for malfunctioning equipment or leaking hydraulic oil and provide the appropriate spill response if leaking equipment is encountered.
2) Regularly inspect compactors for leaking fluids and implement appropriate controls such as spill response/cleanup, collection or diversion of released fluids, providing secondary containment, etc. whenever leaks or dry-weather discharges are observed.

Scrap Metal Collection Containers

1) Avoid placing oily or grease-covered items in uncovered scrap metal recycling collection containers. If needed, wrap oily/greasy items in plastic garbage bags before placing them in the collection container.

Hazardous/Universal Wastes

1) Ensure that hazardous waste and universal wastes (e.g., batteries, bulbs, etc.) are collected and stored indoors or within covered collection containers.
2) Verify that hazardous/universal waste collection containers are in good condition, not leaking, and compatible with the wastes being stored.

Street Sweeping / Vactor Truck Material Storage

1) Do not site storage areas near storm drains, open water bodies, or areas of concentrated runoff.
2) Install sediment control devices (e.g. silt fence, silt socks, hay bales, etc.) around the staging area. Inspect these controls regularly and replace them as needed.
3) Cover the materials staging area, if feasible.
4) Provide oil-absorbent booms if necessary to control oily discharge. Inspect and replace booms regularly.
5) The staging area should be checked periodically for evidence of sediment migrating outside of the staging area. Material that has migrated out of the staging area should be promptly swept and returned to the staging area or disposed of.

Waste Cooking Oil/Grease

1) Maintain storage containers indoors or within a covered location, if feasible.
2) Storage containers shall be secured to prevent infiltration of precipitation and accidental/intentional spills or releases.
3) Carefully transfer waste oil/grease to the appropriate collection container to avoid spills.
4) Maintain suitable spill response equipment near collection containers. Immediately clean up any spilled oil/grease. Keep the exterior of the collection container clean and free of spilled oil/grease.
5) Provide secondary containment for collection containers, if feasible.

VEHICLE AND EQUIPMENT STORAGE

Not Applicable ☐ Applicable ☒

CONCERN

Vehicles and equipment may be stored onsite to support various County operations (e.g., construction, maintenance, snow removal, roadside assistance, mass transit, mowing, etc.). Examples of County owned and operated vehicles and equipment stored onsite at any given time include but are not limited to, the following: cars, trucks, buses, emergency response vehicles, garbage trucks, heavy equipment (backhoes, frontend loaders, etc.), forklifts, towable generators, portable light stands, and roadside equipment. Vehicle and equipment storage is considered a pollutant source due to the potential for incidental releases of petroleum products, lubricants, and various automotive fluids.

POLLUTION PREVENTION MEASURES

1) When possible/practical, store vehicles and equipment inside or under cover to prevent exposure to precipitation.
2) If vehicles or equipment must be stored outside, store vehicles/equipment in designated areas away from areas of concentrated runoff, storm drains, and other stormwater conveyances.
3) Vehicles and equipment shall be staged on impervious (asphalt or concrete) surfaces;
4) Keep truck beds clean and ensure potential stormwater pollutants are stored in closed containers, covered, or otherwise protected from stormwater exposure.
5) Conduct routine visual inspections of vehicles and equipment for the presence of leaks and respond accordingly.
6) Leaking vehicles/equipment should be moved inside or under cover. At a minimum, drip pans or absorbent pads shall be used to contain the leak until the vehicle/equipment can be relocated and the leak addressed.
7) Drain all fluids from wrecked or heavily damaged vehicles and equipment before storage.
8) Have an adequate supply of appropriate spill response equipment readily available and clean up all spills and leaks immediately utilizing dry cleaning techniques (e.g. absorbents and brooms).
9) Train staff in spill response so that incidents are addressed in a timely fashion.
10) Do not wash down areas where leaks have collected on ground surfaces; use dry cleaning methods such as granular absorbents and brooms.

VEHICLE AND EQUIPMENT REFUELING

Not Applicable ☒ Applicable ☐

CONCERN

Refueling activities associated with County vehicles and equipment can result in a discharge of fuel (gasoline and diesel fuel), which has the potential to enter the storm drain system and/or a nearby waterway. Such releases can introduce hydrocarbons, metals, and other toxic chemicals to stormwater runoff.

POLLUTION PREVENTION MEASURES

General Procedures *(applicable to all refueling activities)*

1) Routinely *(at least daily)* inspect the fuel dispensing area for any spills or leaks.
2) Routinely inspect fuel dispensing equipment looking for leaking or damaged equipment. Damaged or malfunctioning equipment shall be taken out of service until it has been repaired.
3) Fuels will only be dispensed into authorized vehicles, equipment, and approved containers.
4) Vehicle operators must remain outside of their vehicles and in attendance of fuel dispensers at all times while dispensing fuel.
5) Third-party contractors must be trained in proper refueling procedures and pollution prevention.
6) Do not utilize a foreign object to keep the dispenser nozzle in the open position. If present, a “hold-open” latch on the nozzle may be used.
7) Do not “top off” a vehicle’s fuel tank once the dispenser nozzle’s automatic shut-off has been activated. Topping off tanks may result in spills. Post signs in fueling areas warning vehicle operators against "topping off" of vehicle fuel tanks.
8) After refueling has stopped, allow several seconds to pass before removing the nozzle and returning it to the dispenser. This will prevent incidental dripping from the nozzle.
9) Employees refueling vehicles shall note the location of the “Emergency Fuel Shut Off” switch, to be used to stop the flow of fuel to the dispensers in the event of a release or emergency.
10) Have an adequate supply of appropriate spill response equipment readily available and clean up all spills immediately utilizing dry cleaning techniques (e.g. absorbents and brooms).
11) Immediately clean up and dispose of used absorbent material.
12) Do not wash down fueling areas; use dry cleaning methods such as granular absorbents and brooms.
13) Conduct refueling activities over impervious (e.g. concrete) surfaces. Place drip pans or absorbent pads under the nozzle if fueling occurs over a permeable surface such as grass or soil.
14) Install oil control devices in storm drains that may receive contaminated runoff from fueling areas.
15) Cover fueling areas with a canopy or roof to prevent direct contact with rainfall. Direct run-on away from fueling areas and collect fueling area run-off in a dead-end sump or oil-water separator.

Mobile Equipment Refueling

1) Refuel equipment on an impervious surface, downgradient of, and at the farthest practical distance from any storm drain, stormwater conveyance, stormwater management feature, or waterway.
2) Utilize secondary containment when refueling equipment (when practical).
3) Ensure mobile refuelers are parked in designated locations and away from areas of concentrated run-off, storm drains, and other stormwater conveyances.
4) Ensure that procedures are in place and that staff is properly trained in spill response/cleanup so that leaks and spills are addressed appropriately and promptly.

BMP Fact Sheet

VEHICLE MAINTENANCE

GH-04

Not Applicable ☐ Applicable ☒

CONCERN

Vehicle and equipment maintenance can impact the water quality of nearby waterways by exposing stormwater to various pollutants including petroleum hydrocarbons, solvents, antifreeze/coolants, used oil, lubricating oil, grease, brake fluid, metals, and various chemicals. Additionally, vehicles that are wrecked or awaiting repair can be a source of pollution if leaking fluids are not properly controlled.

POLLUTION PREVENTION MEASURES

1) Conduct vehicle and equipment maintenance activities indoors.
2) Make sure incoming vehicles and equipment are inspected for leaking fluids and oil.
3) Move leaking vehicles or equipment indoors or under cover as soon as possible. At a minimum, a drip pan or absorbent pads shall be utilized to contain the leak until the vehicle/equipment can be relocated and the leak addressed.
4) Avoid performing maintenance on vehicles in close proximity to exterior doorways, which may allow released fluids to migrate outdoors.
5) Have an adequate supply of appropriate spill response equipment readily available and clean up all spills and leaks immediately utilizing dry cleaning techniques (e.g. absorbents and brooms).
6) Keep maintenance areas neat and well organized. Remove dirt, debris, and used absorbent regularly.
7) Inspect maintenance areas as well as maintenance equipment on a routine basis.
8) Store vehicles, parts, and generated wastes indoors or off the ground and under cover whenever possible. When practical, provide secondary containment.
9) Promptly transfer used fluids to the proper waste container; do not leave full drip pans or other open containers around the shop. Empty and clean drip pans and containers regularly.
10) Waste liquids shall not be poured into floor drains, sinks, outdoor storm drain inlets, or other storm drains or sewer connections. Liquid wastes are to be collected in properly labeled containers and disposed of by a licensed waste hauler or other appropriate method.
11) Store leaking batteries in a sealed container and provide secondary containment, if feasible.
12) Clean all parts indoors utilizing a self-contained parts washer.
13) Do not hose down indoor service areas to storm drains or areas where it can seep into groundwater.
14) Maintain floor drains in good working order and inspect for proper function on a routine basis. Consider plugging floor drains that discharge to the storm sewer.
15) Ensure oil/water separators (if present) are maintained in proper working order and are checked on a routine basis for the presence of oil.
16) If maintenance work must be performed outdoors, adhere to the following requirements:
    - Conduct maintenance activities over an impervious surface, away from stormwater inlets.
    - Cover outdoor maintenance areas and direct stormwater run-on away from the area.
    - Use drip pans or drop cloths underneath the equipment to catch leaks and drips.
    - Have an adequate supply of appropriate spill response equipment readily available.
    - Clean all spills immediately using dry cleaning techniques (e.g. absorbents and brooms).
    - Avoid performing maintenance activities during precipitation events.
    - Limit temporary outdoor maintenance activities to a single shift/day if additional time is needed to cover the work area at the end of each day/shift.

VEHICLE AND EQUIPMENT WASHING

Not Applicable ☐ Applicable ☒

CONCERN

Vehicle and equipment washing can generate washwater that contains oil, grease, organic compounds, surfactants, phosphates, metals, and suspended solids. If vehicles/equipment are washed outdoors on impervious surfaces, dirty washwater can contaminate stormwater that ends up in waterways. Washing equipment over pervious surfaces can allow washwater to seep into the ground contaminating groundwater.

POLLUTION PREVENTION MEASURES

1) Vehicle and equipment washing should only be conducted in designated indoor wash bays that capture and recycle washwater to the extent practical.
2) Wastewater from the washing facility should be discharged to the sanitary sewer system under the authorization of a wastewater discharge permit issued by the local municipal authority.
3) The floor of indoor vehicle wash bays should be completely bermed or sloped to collect wash water and prevent migration outdoors.
4) No other activities (e.g., fluid changes, repairs, material storage) shall be performed in wash areas.
5) Keep the wash bay neat and well organized. Sweep or pick up all trash and debris daily or as needed.
6) Solid materials accumulated on vehicles or in vehicle beds (e.g. salt, soil, grass, etc.) shall be knocked off or otherwise removed from the vehicle (while inside the wash bay) prior to washing. Solid materials shall be collected and disposed of properly.
7) For vehicles too large to completely fit in the wash bays, only the portion of the vehicle physically located in the confines of the wash bay shall be cleaned. The vehicle shall then be rotated to allow for the remaining portion of the vehicle to be washed.
8) Use nozzles that automatically turn off water when not in use and consider high-pressure, low-volume sprays.
9) Avoid detergents as much as possible. If detergents are necessary, use a biodegradable, phosphate-free detergent.
10) If discharging to an oil-water separator, use a non-emulsifying detergent.
11) Inspect floor drain systems, holding tanks, and conveyances associated with designated wash areas regularly. Maintain oil/water separators and/or process flowthrough separators on a routine basis.
12) Use commercial car washes when vehicle or equipment washing cannot be performed onsite without causing impacts to stormwater.
13) If washing must occur onsite and outdoors, use a designated impervious area that is marked with posted signs indicating proper washing procedures. This area must be bermed to contain the wash water and graded to direct the wash water to the sanitary sewer, an oil-water separator, a holding tank, a dead-end sump, or other containment area. Captured water shall be disposed of properly.
14) Avoid steam cleaning and engine/undercarriage washing which can produce high pollutant concentrations. If steam cleaning or engine washing is necessary, perform such cleanings within isolated indoor areas, and ensure wash water is treated and discharged to the sanitary sewer (if permitted to do so) or captured for off-site disposal.
15) Train staff in proper washing techniques and how to confine washing to designated wash areas.
16) Consider alternatives to washing such as using air to blow grass and debris from small equipment, wet-wiping equipment with rags, etc.

BMP Fact Sheet

MATERIAL STORAGE

GH-06

Not Applicable ☐ Applicable ☒

CONCERN

The storage of petroleum products, chemicals, paints, cleaners, pesticides, fertilizers, bags of erodible materials like sand, cement, and soil, and other potential pollutants can negatively impact surface waters through the accidental releases or leaching of materials into stormwater. Unprotected outdoor storage areas can generate a wide range of stormwater pollutants, such as sediment, nutrients, toxic materials, and petroleum products.

POLLUTION PREVENTION MEASURES

1) Whenever possible, store containers (e.g. drums, bins, bags, cans, and totes) indoors or under cover to limit exposure to stormwater.
2) Designate specific areas for material delivery and storage that are away from heavy traffic areas, storm drains, stormwater conveyances, and areas of concentrated run-off.
3) Designated outdoor storage areas should be paved or consist of an impervious surface.
4) Provide secondary containment for materials whenever possible or required per regulation.
5) Store materials on pallets to prevent stormwater run-on from coming into contact with materials, prevent container corrosion, and allow for better leak detection. Pallets must be in good condition and promptly replaced once damaged or deteriorated.
6) Stack containers according to the manufacturer's recommendations to avoid damage.
7) Immediately replace damaged, corroded, or leaking containers.
8) Ensure all storage containers are clearly labeled with their contents.
9) Keep containers tightly sealed after use.
10) Maintain an accurate inventory of hazardous substances and limit on-site storage to that which is necessary to support facility operations.
11) Keep storage areas neat and well organized; remove debris and unneeded material promptly.
12) If empty drums are stored outdoors, ensure that all openings are equipped with caps to prevent water intrusion and that the drum/storage area is labeled "Empty Drums".
13) Have an adequate supply of appropriate spill response equipment readily available and clean up all spills and releases immediately utilizing dry cleaning techniques (e.g. sweeping/absorbents).
14) Clean up all migrating dry materials upon discovery and address the source of the release.
15) Provide perimeter controls (e.g., berms, rock check dams, etc.) for erodible stockpiles of materials such as mulch, sand, and gravel to prevent migration into the stormwater system.
16) Routinely inspect material storage areas for leaks, material migration, and damaged or corroded containers. Ensure that secondary containment and other perimeter controls are in satisfactory condition.
17) Additional visual inspections of outdoor storage areas should be conducted after significant rainfall events (i.e., greater than 0.5 inches).

BMP Fact Sheet

ABOVEGROUND STORAGE TANKS

GH-07

Not Applicable ☒ Applicable ☐

CONCERN

Aboveground storage tanks (ASTs) may be used to store fuels, automotive fluids, chemicals, or deicing fluids. Leaks from tanks, piping, or other equipment and releases during fluid transfers can all impact stormwater quality. It is critical to maintain ASTs in good working condition to prevent spills and/or releases from occurring. Improperly managed storage tanks can cause significant environmental impacts.

POLLUTION PREVENTION MEASURES

General *(applicable to all storage tanks)*

1) ASTs should be installed and maintained in accordance with COMAR 26.10 and applicable fire codes.
2) ASTs should be provided with secondary containment, whenever feasible or required by regulation.
3) Secondary containment areas shall be maintained clean and dry; drain valves must be kept closed; accumulated liquid shall only be discharged if there are no visible signs of impacts, and in accordance with applicable regulations.
4) Inspect ASTs monthly to identify any leaking or malfunctioning equipment and ensure tanks are functioning as designed.
5) ASTs shall be equipped with a form of liquid-level detection (i.e. sight gauge, electronic monitoring).
6) ASTs shall be equipped with overfill prevention (i.e. overfill alarm and/or overfill prevention valve).
7) Tanks and piping should be protected from vehicle impact via barriers, bollards, guard rails, etc.
8) Install ASTs on solid foundations over impervious surfaces, and away from areas of concentrated run-off, storm drains, and other stormwater conveyances.
9) Properly label all storage tanks (e.g., contents, capacity, etc.).
10) Keep remote fills and fill port spill buckets clean and dry.
11) Keep fill ports, gates, and tank areas secured when not in use to prevent fuel theft and tampering.
12) Have an adequate supply of appropriate spill response equipment readily available and clean up all spills and leaks immediately utilizing dry cleaning techniques (e.g. absorbents and brooms).
13) Facilities that maintain 1,320 gallons or more of aboveground oil products shall prepare and implement a Spill Prevention, Control, and Countermeasure (SPCC) Plan, per 40 CFR 112.
14) Facilities that maintain 1,000 gallons or more of used oil or 10,000 gallons or more of virgin oil in ASTs shall obtain an Individual Oil Operations Permit from the MDE, per COMAR 26.10.01.09.
15) Owners/Operators of facilities that maintain more than 2,500 gallons of oil in ASTs are required to register each AST with MDE, per COMAR 26.10.01.10.

Bulk Fluid Transfers (Deliveries)

1) All bulk fluid transfer operations shall be performed under the direct supervision of knowledgeable County personnel. At no time shall the delivery vehicle or delivery vehicle operator be unsupervised.
2) The product level within the tank must be measured and available capacity verified before delivery.
3) Deliveries shall be made via fill ports equipped with catch basins to capture drips and spills.
4) Ensure an adequate supply of appropriate spill response equipment is readily available.
5) Post signs in delivery area displaying proper delivery procedures and emergency contact information.

ABOVEGROUND STORAGE TANKS

Used Oil Tanks

1) County personnel must verify the level of product in used oil tanks prior to filling.
2) Used oil tanks should only be filled via designated fill ports. Pumping used oil into the tank via a closed piping system is preferred to manually pouring used oil into the tank.

Brine Tanks

1) If multiple tanks are located onsite, the tanks should be plumbed to ensure that the complete failure of one tank will not drain all the tanks in the system (tanks must be isolated).
2) Minimize seeping and leaking at fittings by properly supporting piping and fittings, using flexible connectors or hoses to reduce stress, and installing corrosion-resistant fittings.
3) Consider placing hoses in non-permeable trenches or using drip-less nozzles to reduce repeated small spills.

RESIDENT DROP-OFF CENTER

Not Applicable ☒ Applicable ☐

CONCERN

Resident Drop-Off Centers are publicly accessible facilities where residents can drop off used automotive fluids (i.e. oil or antifreeze), municipal waste, recyclable, and/or organic waste, typically free of charge. Improper transfer or management of the waste materials can allow a number of pollutants including oils and greases, toxic and chemical compounds, nutrients, metals, and other wastes to enter waterways.

POLLUTION PREVENTION MEASURES

General *(applicable to all materials collected)*

1) Clearly identify waste materials accepted by the facility, and clearly mark designated collection areas.
2) Waste material should be inspected by a County representative, prior to disposal.
3) Avoid positioning waste receptacles near storm drains, water bodies, or areas of concentrated runoff.
4) When practical, receiving areas should be covered.
5) Do not allow containers to overflow or waste materials to accumulate on the ground.

Automotive Fluid Collection

1) Used oil, antifreeze, and automotive fluid receiving areas should be on impervious surfaces, covered, and provided with secondary containment, which shall be maintained clean and dry.
2) Provide lidded waste receptacles in the receiving area for the public to dispose of empty containers. Waste receptacles shall be emptied routinely and waste disposed of properly.
3) Collection areas shall be inspected daily and all trash and spilled liquids appropriately cleaned up.
4) The available capacity of waste liquid collection containers shall be routinely verified and waste removals scheduled, as needed.
5) Install appropriate controls to prohibit the overfilling of waste fluid collection containers.
6) Place appropriate spill response equipment in close proximity to drop-off areas.
7) If aboveground tanks are used to collect waste fluids, refer to BMP Fact Sheet GHP-07 (Aboveground Storage Tanks) for additional recommendations.

Organic Debris Collection

1) Routinely transfer collected organic debris/waste to a composting or disposal facility.
2) Do not permit composting of organic waste except at properly designed and permitted facilities.
3) Enact controls to prevent leaves and other windblown debris from entering stormwater inlets.

Municipal Waste / Recyclables Collection

1) Refer to BMP Fact Sheet GHP-01 (Waste Management) for additional recommendations.

BMP Fact Sheet

STOCKPILES

GH-09

Not Applicable ☒ Applicable ☐

CONCERN

The County may stockpile various erodible materials, the type of material can vary depending on the needs of the County. Stockpiled material may include soil, sand, millings, slag, cinders, sawdust, landscaping bark, compost, etc. Exposed stockpiles can easily erode due to wind or precipitation and contribute suspended solids to stormwater runoff.

POLLUTION PREVENTION MEASURES

1) Maintain stockpiles of erodible materials within roofed storage buildings or covered storage bins, if feasible. If not, stockpile material on an impervious surface and cover the stockpile.
2) Temporary stockpiles should be placed on an impermeable membrane (tarp) for quick clean-up.
3) Locate stockpiles away from drain inlets, catch basins, swales, areas of concentrated stormwater flow, water bodies, and environmentally sensitive areas.
4) Divert stormwater flows away from/around the stockpiles using a diversion device (e.g., temporary swale, berm, sandbags, or diversion fence).
5) Cover temporary stockpiles of erodible materials with a tarp that has been adequately secured. The covers must be in place at all times when the stockpile is not in active use.
6) When accessing a portion of the stockpile, only remove a section of the cover to minimize exposure to the elements.
7) Use barriers to isolate stockpiled materials from high-traffic areas to prevent tracking of materials.
8) Sweep (do not wash or hose down) in front of material stockpile storage areas at regular intervals, following loading and unloading activities, and during times of heavy use.
9) If material is observed migrating from the stockpile, clean up all migrated material upon discovery and provide additional controls to reduce migration from the stockpile. If such measures are ineffective implement controls to capture pollutants before they migrate off-site (e.g. silt fencing, inlet filters, filter socks, at-grade inlet protection, etc.).
10) Minimize material stockpile inventory based on historical inventory/usage records and public safety operational needs.
11) Cold mix asphalt shall be stored on and covered with plastic sheeting or comparable material.
12) Routinely inspect outdoor material stockpiles to verify existing controls are functioning properly and for signs of erosion or material transport.

BMP Fact Sheet

DEICING MATERIALS

GH-10

Not Applicable ☒ Applicable ☐

CONCERN

When salt and other de-icing materials are stored outside and uncovered, they have a much higher risk of being eroded and transported offsite by stormwater. Improper de-icing material and sand storage may result in stormwater runoff containing elevated concentrations of sodium chloride and dissolved solids. Sodium chloride (e.g., road salt) is an effective deicer but can be highly corrosive to stormwater facilities. Smaller waterways are at a higher risk to increases in salinity, which can threaten aquatic species. Additionally, runoff containing sodium chloride has the potential to reach drinking water sources where small traces can adversely impact public health.

POLLUTION PREVENTION MEASURES

1) Bagged de-icing chemicals must be stored indoors. If stored outdoors bags must be kept on pallets (off the ground) and covered at all times. Bags must be intact without holes or openings.
2) Bulk de-icing materials shall be stored under cover and on an impervious surface.
3) Bulk salt storage areas/buildings shall not be overfilled so that salt spills out beyond the entrance of the storage area/building.
4) Bulk salt storage areas/buildings shall be maintained in a structurally sound condition and in a way that prevents the release of salt and the infiltration of stormwater. Deicing materials should not touch the sides of metal storage containers.
5) Barriers such as berms, gates, knee walls, tarps, and/or straw bales shall be placed at the entrances of bulk salt storage areas/buildings to prohibit the migration of salt and prevent contact with precipitation/stormwater runoff.
6) Routinely inspect storage areas for migrating materials or deterioration of containment structures. Sweep up all migrating materials upon discovery and repair the source of the migrating pollutant.
7) Loading areas should be constructed of impervious material and covered or enclosed, to the extent practical, to reduce potential contact with stormwater.
8) Minimize the distance de-icing materials are transported during loading/unloading activities.
9) Prevent and/or minimize the spillage of salt and de-icing materials during loading/unloading activities, immediately clean spilled or tracked materials.
10) Sweeping of storage and loading/unloading areas shall be conducted immediately following loading/unloading activities.
11) Do not store de-icing materials (bulk or bagged) over or immediately adjacent to drains or waterways.
12) Control site drainage by diverting stormwater run-on away from storage/loading areas using appropriate measures (e.g., curbing, berms, etc.).
13) Slope storage/loading areas to direct salt-contaminated runoff to an appropriate collection area, and in a manner that prevents the runoff from reaching adjacent soil or surface waters.
14) Excess salt shall be removed from salt handling equipment (trucks, spreaders, etc.) following use/prior to storage. All cleaning shall occur on an impervious surface, which is sloped or curbed to contain any washwater and direct it to a collection area for recycling or proper disposal.

Appendix A

GHP Site Inspection Checklist

GOOD HOUSEKEEPING PLAN (GHP)
SITE INSPECTION CHECKLIST

Facility Name: _____ **Inspection Date:** _____

Inspector Name: _____ **Inspector Signature:** _____

- The intent of this inspection is to ensure that the site is being properly maintained and that there are no visible signs of pollutants entering the stormwater system.
- **A shaded status box designates an item in a non-compliant status. Please provide an explanation for all non-compliant items and subsequently document all corrective actions performed.**
- Retain the completed checklists for five (5) years.

Item	Status			CORRECTIVE ACTIONS/COMMENTS *Items which cannot be corrected immediately must be reported to the GHP/NPDES Program Manager*
	Yes	No	N/A	
GENERAL HOUSEKEEPING				
1. Are exterior areas of the facility free of accumulated trash, debris, and unneeded materials?				
2. Are stormwater drains and inlets free from debris, sediment, and evidence of spills/releases?				
3. Is the facility free from signs of erosion?				
4. Are paved surfaces free of accumulated sediment?				
5. Is spill response equipment available in maintenance areas, fueling areas, hazardous material storage areas, and/or other required areas?				
6. Are spill kits and absorbent materials clearly labeled and accessible (i.e. items are not piled on top of or in front of spill kits)?				
7. Are spill kits secured from being stolen or misused?				
8. Is there a labeled container present for the disposal of used spill cleanup material?				

GOOD HOUSEKEEPING PLAN (GHP)
SITE INSPECTION CHECKLIST

Item	Status			CORRECTIVE ACTIONS/COMMENTS *Items which cannot be corrected immediately must be reported to the GHP/NPDES Program Manager*
	Yes	No	N/A	
9. Does spill response equipment (i.e. spill kits, absorbent materials) need to be replenished?				
WASTE MANAGEMENT				
10. Are areas around solid waste containers/roll-offs/compactors free of excessive trash accumulation or overflowing containers?				
11. Are areas around solid waste containers/roll-offs/compactors free of visible evidence (i.e. leaks, staining) of ongoing stormwater pollution?				
12. Are scrap metal containers in good order and free from evidence of leaking oil/grease?				
13. For dumpsters, roll-offs, and other waste receptacles, where leaks are observed, have appropriate controls (e.g. containment, spill response, etc.) been enacted?				
14. Are the lids (if present) to solid waste containers closed?				
15. Is street sweeping/vactor waste being managed appropriately (i.e. no evidence of material migration)?				
16. Is waste cooking grease managed appropriately (i.e. no evidence of spilled material or excessive staining)?				
VEHICLE & EQUIPMENT STORAGE				
17. Are stored vehicles/equipment free from leaks?				
18. If leaks are present, are they being managed appropriately (drip pan or other methods in place to capture released liquids)?				
19. Are storage areas free of visible evidence of chronic leaks/spills (i.e. significant staining)?				

GOOD HOUSEKEEPING PLAN (GHP)
SITE INSPECTION CHECKLIST

Item	Status			CORRECTIVE ACTIONS/COMMENTS *Items which cannot be corrected immediately must be reported to the GHP/NPDES Program Manager*
	Yes	No	N/A	
VEHICLE & EQUIPMENT REFUELING				
20. Are the areas around refueling areas free from evidence of spills or leaks?				
21. Are refueling areas free of used absorbent material that has not been swept/cleaned up?				
22. Do fuel dispensers and hoses appear to be in good working order and well-maintained?				
VEHICLE MAINTENANCE				
23. Is there any indication that vehicle maintenance activities are being conducted outdoors?				
24. Is there any indication that vehicle maintenance activities are contributing to stormwater pollution?				
VEHICLE & EQUIPMENT WASHING				
25. If performed on-site, does all vehicle/equipment washing occur indoors?				
26. Is wash water collected and disposed of properly?				
27. Is there any indication that vehicle/equipment wash water is being released to stormwater conveyances or pervious areas?				
MATERIAL STORAGE				
28. Are all outdoor storage areas free from visible signs of leaks or spilled material?				
29. Are material storage containers in good condition?				

GOOD HOUSEKEEPING PLAN (GHP)
SITE INSPECTION CHECKLIST

Item	Status			CORRECTIVE ACTIONS/COMMENTS *Items which cannot be corrected immediately must be reported to the GHP/NPDES Program Manager*
	Yes	No	N/A	
30. Are drums, totes, and other containers (that are <u>not</u> empty) stored off the ground and covered, or stored indoors?				
31. Are liquid-containing drums/totes located outdoors provided with secondary containment?				
32. Are containers that are located outdoors equipped with closed lids except when material transfers are occurring?				
33. Are materials, which could impact stormwater, stored away from heavy traffic areas, or protected from vehicle collisions?				
34. Are chemical storage containers properly labeled?				
35. If empty drums are stored outside, are all openings equipped with caps to prevent water intrusion?				
ABOVEGROUND STORAGE TANKS				
36. Are all storage tanks, and surrounding areas free from visible signs of leaks or spilled material?				
37. Do storage tanks appear to be in good working order (e.g. free of obvious signs of damage or malfunctioning equipment)?				
38. Are remote fills associated with tanks free of liquid and debris?				
RESIDENT DROP-OFF CENTERS				
39. Are waste collection areas clearly identified?				
40. Are used oil/antifreeze collection tanks, containment structures, and surrounding areas free from visible signs of leaks or spilled material?				

GOOD HOUSEKEEPING PLAN (GHP)
SITE INSPECTION CHECKLIST

Item	Status			CORRECTIVE ACTIONS/COMMENTS *Items which cannot be corrected immediately must be reported to the GHP/NPDES Program Manager*
	Yes	No	N/A	
41. Do used oil/antifreeze collection tanks appear to be in good working order (e.g. free of obvious signs of damage or malfunctioning equipment)?				
42. Are empty used oil/antifreeze containers being collected and disposed of in the trash?				
43. Are areas around waste/recyclables containers free of excessive trash accumulation or overflowing containers?				
44. Are areas around waste/recyclables containers free of visible evidence (i.e. leaks, staining) of ongoing stormwater pollution?				
45. Are organic debris collection areas free of visible evidence of ongoing stormwater pollution (e.g. leaves and debris in stormwater conveyances)?				
STOCKPILES				
46. Are material piles, including salt, soil, sand, and millings isolated (i.e. covered, bermed, etc.) to prevent stormwater run-on and run-off?				
47. Are areas surrounding material piles (e.g. salt, soil, sand, millings, etc.) free of tracked or migrated material?				
DEICING MATERIALS				
48. Are all deicing materials stored indoors or undercover?				
49. Are salt storage structures in good condition (e.g. no evidence of material escaping or stormwater infiltration)?				
50. Is the salt loading area clean?				

GOOD HOUSEKEEPING PLAN (GHP)
SITE INSPECTION CHECKLIST

Item	Status			CORRECTIVE ACTIONS/COMMENTS *Items which cannot be corrected immediately must be reported to the GHP/NPDES Program Manager*
	Yes	No	N/A	
51. If deicing materials are tarped, is the tarp secure and covering the entire pile?				
52. Are bags of salt stored indoors, or off the ground and covered?				

ADDITIONAL COMMENTS:

Appendix B

GHP Stormwater Conveyance System Inspection Checklist

GOOD HOUSEKEEPING PLAN (GHP)
STORMWATER CONVEYANCE SYSTEM INSPECTION CHECKLIST

Facility Name: _____ **Inspection Date:** _____

Inspector Name: _____ **Inspector Signature:** _____

- The intent of this inspection is to ensure the free flow of stormwater within on-site conveyance systems and prevent damage/flooding.
- **If maintenance is needed, please provide an explanation, and document all corrective actions performed.**
- **Inspections shall include visually accessible infrastructure only; at no time shall inspection personnel enter a confined space.**
- Retain the completed checklists for five (5) years.

Item	Item Checked (Y/N/NA)	Maintenance Needed (Y/N)	CORRECTIVE ACTIONS/COMMENTS *Items which cannot be corrected immediately must be reported to the GHP/NPDES Program Manager*
CATCH BASINS / INLETS			
1. Look for debris and sediment blocking catch basin grates. If found, remove.			
2. Look for damage or cracks to the frame, grate, basin walls or bottom. If found, schedule repairs or replacement.			
3. Look for sediment and debris in the catch basin sump. If sediment fills 60% of the sump or comes within 6” of a pipe it should be scheduled for cleaning.			
4. If any type of filtering device is present, verify that the filter is not clogged, torn, or damaged; clean if clogged, replace if damaged.			
PIPES / CULVERTS			
5. Look for evidence of clogged piping (e.g. visual obstructions, standing water within manholes/inlets structures, etc.). If found, remove or schedule cleaning.			
6. Verify vegetation growth, if present, does not impede water flow. If it does, mow, cut back, or remove.			

GOOD HOUSEKEEPING PLAN (GHP)

STORMWATER CONVEYANCE SYSTEM INSPECTION CHECKLIST

Item	Item Checked (Y/N/NA)	Maintenance Needed (Y/N)	CORRECTIVE ACTIONS/COMMENTS *Items which cannot be corrected immediately must be reported to the GHP/NPDES Program Manager*
7. Inspect for damaged piping, inlets, outlets, headwalls, wingwalls, or excessive erosion. If found, make or schedule repairs.			
DITCHES / TRAPEZOIDAL SWALES			
8. Check for erosion, slumping, or undercutting. If found, make or schedule repairs.			
9. Look for trash and sediment accumulation. Remove all trash and remove sediment if it will impede water flow or clog downstream structures.			
10. Verify vegetation growth does not impede water flow. If it does, mow, cut back, or remove. Remove any trees or shrubs growing within the ditch.			
11. Check the integrity of check dams, filter socks, or other flow dissipation/filtering devices within the ditch or swale. Perform or schedule service if they are clogged, damaged, or deteriorated.			
12. Check inlets and outlets for debris accumulation, damage, or erosion. If found, make or schedule repairs.			

ADDITIONAL COMMENTS:

GUIDANCE DOCUMENT
GOOD HOUSEKEEPING PLAN - STORMWATER CONVEYANCE INSPECTIONS

INTRODUCTION

Maintaining catch basins, stormwater inlets, and other stormwater conveyance structures on a regular basis will remove pollutants, prevent backups, and ensure the system functions as intended to avoid flooding.

Each GHP-covered facility is required to conduct routine stormwater conveyance system inspections to ensure the free flow of stormwater within the conveyance system(s). The GHP includes a *"GHP Stormwater Conveyance System Inspection Checklist"*, to be used when completing the required inspections. This document provides additional background and guidance to aid facility personnel in completing the inspections.

CATCH BASINS / INLETS

Catch basins and inlets are all points for stormwater to enter storm drain systems. These structures are typically part of a larger conveyance system with many interconnected components where the impairment of one component can compromise the functionality of the larger system. Inlets and catch basins are subject to functional impairment by a variety of conditions, including:

- Structural damage including from vehicles and plows
- Cracks/joint separation at piping (inlet and outlet) connections
- Leaking due to cracks and joint separation
- Missing or damaged grates and grate frames
- Corrosion
- Blockage caused by debris, sediment, vegetation, or other objects

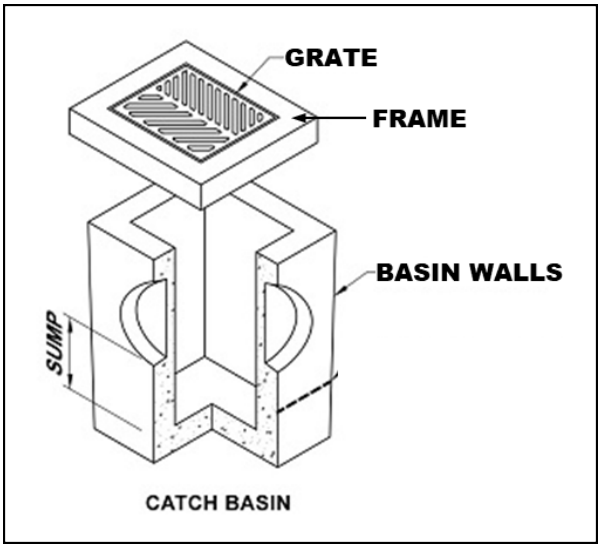

Figure 1 – Catch Basin Diagram

The following photos provide additional information related to the various inspection items, including examples of typical issues that may be encountered. The photo numbers correspond to the inspection checklist item number.

Inspection Item #1 [1]



Debris and sediment blocking inlet/catch basin grate.

Inspection Item #2 [2]



Damaged Grate

Inspection Item #2 [3]



Damaged Frame

Inspection Item #2 [4]



Failing brick walls with a stormwater inlet.

Inspection Item #2 [5]



Failing asphalt surrounding the inlet

[1] Grand Valley State University - https://www.gvsu.edu/groundswell/clogged-storm-drains-71.htm
[2] Georgia Department of Transportation – Stormwater System Inspection and Maintenance Manual, March 2020
[3] https://catchbasinauthority.ca/catch-basin-101/
[4] https://www.fixasphalt.com/catch-basin-repairs
[5] https://ccpia.org/catch-basin-and-manhole-inspections/

Inspection Item #3 [6]



Sediment and debris inside stormwater inlet

Inspection Item #3

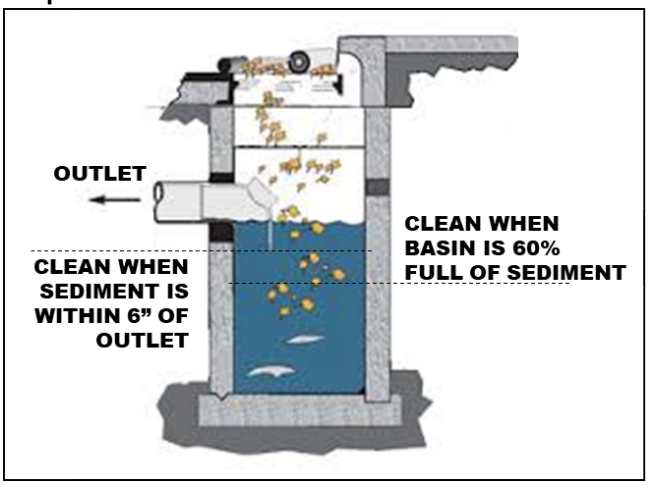

Remove sediment from a catch basin if it fills 60% of the sump or comes within 6" of a pipe.

Inspection Item #4 [7]



Example of inlet filter. Replace when filled or damaged. damaged.

Inspection Item #4 [8]



Example of an inlet filter sock, replace if

PIPES AND CULVERTS

Pipe systems are designed to convey stormwater runoff safely and effectively from inlets to various discharge points and outfalls. A culvert is a structure that channels water under an obstacle such as a roadway or railroad. These structures are subject to functional impairment by a variety of conditions, including:

- Blockage or obstruction due to build up of vegetation, debris, sediment, or other objects
- Cracks and/or joint separation
- Collapsed pipe
- Corrosion
- Root intrusion
- Lack of stabilization

[6] https://www.fixasphalt.com/catch-basin-repairs
[7] https://store.interstateproducts.com/products/Ultra-Drain-Guards/Ultra-Drain-Guard-Adjustable-Frame-Model
[8] https://www.newpig.com/pig-sediment-filter-sock/p/FLT787

Inspection Item #5 [9]



A pipe filled with sediment, inhibiting flow.

Inspection Item #5 [10]



Standing water around an inlet may indicate a blockage.

Inspection Item #6 [11]



Pipe conveyance filled with vegetation.

Inspection Item #7 [12]

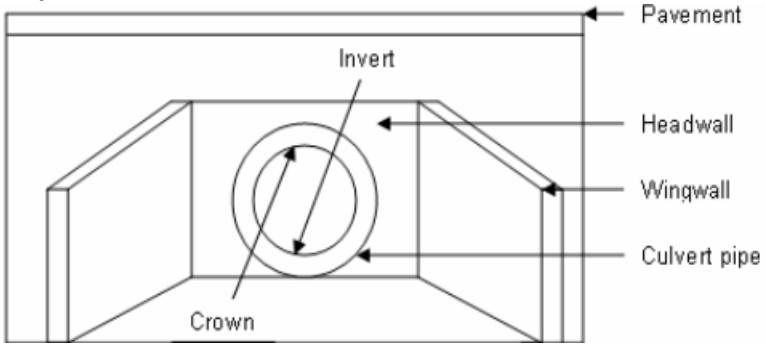

Diagram depicting various components of a culvert.

[9] Georgia Department of Transportation – Stormwater System Inspection and Maintenance Manual, March 2020
[10] https://www3.epa.gov/region9/water/npdes/stormwater-feature.html
[11] Georgia Department of Transportation – Stormwater System Inspection and Maintenance Manual, March 2020
[12] https://www.researchgate.net/figure/Components-of-a-Culvert_fig34_228685906

Inspection Item #7 [13]



A crack is the culvert headwall.

Inspection Item #7 [14]



Evidence of erosion around a culvert.

DITCHES AND SWALES

Ditches and swales serve similar functions. Both are used to convey stormwater. However, there are slight differences. A ditch is a narrow channel typically found along roads and at the edges of parking lots/driveways. A swale is like a ditch, but it is broad and shallow, and usually covered or lined with turfgrass or stone. Issues associated with these structures, which could impede their function include:

- Blockage or obstruction due to vegetation, debris, sediment, or other objects
- Erosion
- Rapidly moving water
- Lack of adequate vegetative cover for grass-lined channels

Inspection Item #8 [15]



Erosion and slumping within a drainage ditch.

Inspection Item #8 [16]



Slumping within a drainage swale.

[13] https://www.sbt-durabi.org/articles/xml/ARN0/
[14] https://lufkindailynews.com/news/local/culverts-crumbling-in-precinct-1/article_a9fed902-4379-5248-ab11-7471e2974298.html
[15] https://graniteseed.com/blog/how-to-stop-a-ditch-from-eroding/
[16] https://www.mnwcd.org/erosion-control

Inspection Item #9 [17]



Litter and debris within a ditch.

Inspection Item #9 [18]



Litter and debris within a swale.

Inspection Item #10 [19]



Cracks and joint separation in concrete channels, removal of vegetation may prevent future damage.

Inspection Item #11 [20]



Rock check dam across a channel.

Inspection Item #11 [21]



Filter sock check dams across a grass swale.

[17] https://craven.ces.ncsu.edu/2023/02/for-those-who-love-to-litter/
[18] https://www.cityoftulsa.org/government/departments/public-works/stormwater-quality/adopt-a-stream/
[19] Georgia Department of Transportation – Stormwater System Inspection and Maintenance Manual, March 2020
[20] EPA Stormwater Best Management Practice, Check Dams, December 2021
[21] EPA Stormwater Best Management Practice, Check Dams, December 2021

Inspection Item #12 [22]



Inlet to a rock-lined swale.

Inspection Item #12 [23]



Sediment accumulation at swale inlet.

END OF DOCUMENT

[22] https://www.stormwater.com/erosion-control/vegetation-management/article/13016118/inlet-protection-during-constructionand-after

[23] https://www.stormwater.com/erosion-control/vegetation-management/article/13016118/inlet-protection-during-constructionand-after

Appendix C

General Spill Response Procedures

SPILL RESPONSE AND NOTIFICATION PROCEDURES

A. Discovery of a Spill

1. Upon discovery of a spill, facility personnel should immediately assess the situation and determine if the spill is considered a "Minor" or "Major" spill. For a spill to be considered "Minor" all the following conditions must be satisfied:

    - ❖ The type of material spilled is known;
    - ❖ The spill is confined to the immediate work area;
    - ❖ The spill has not reached storm drains, sanitary sewer systems, open water, or surrounding soils;
    - ❖ The spill can be safely managed;
    - ❖ The employee can contain and clean up the spill with the PPE that is normally used in the work area;
    - ❖ The spill does not pose a serious threat of fire or an explosion; and
    - ❖ The spill does not pose conditions that are immediately dangerous to life or health.

2. If all the above conditions are met, the spill is considered "Minor". Refer to ***Section B*** of this document for appropriate response actions.

3. If all the above conditions are not met, then the spill is considered "Major". Refer to ***Section C*** of this document for appropriate response actions.

4. If a spill involves flammable liquids, ignitable vapors may be present - precautions must be taken to prevent ignition. Do not turn on or off equipment since sparks may be generated. Additionally, avoid the movement of equipment that could create static electricity. Larger spills of flammable liquids could pose a fire threat and would be considered a "Major" spill. Refer to ***Section C*** for appropriate actions.

B. Response to a "Minor" Spill

1. Identify the source of the spill and the direction in which the spill is heading.

2. Attempt to stop the spill at the source. Where applicable, the source of the spill shall be taken out of service until repairs can be made. If the spill is related to a fuel dispensing system, activate the Emergency Shut-Off (ESO) switch to prevent additional fuel disbursements.

3. If material is released outside a containment area, it is crucial that the material be contained as quickly as possible. Following proper safety procedures, use absorbent materials or diking to contain the spill. Prevent the spill from reaching storm drains, sanitary sewers, or open water. If a spill is flowing toward a drain, install temporary diking around the drain, block off the drain with a drain cover, or place absorbent material around the drain to prevent a discharge.

4. Once the spill has been stopped and contained, estimate the quantity of the spill. Consult applicable Safety Data Sheet (SDS) for material compatibility and environmental precautions. Note and follow recommendations regarding special precautions, spill response equipment, methods, or precautions. All cleanup work shall be conducted in accordance with existing safety protocols and SDS recommendations. Contact the facility Superintendent/Supervisor, or designee, for assistance if needed.

5. Recover or clean up the spilled material as much as possible. Material that cannot be reused must be discarded in accordance with state and federal regulations. Liquids absorbed by porous materials (e.g., wood, gravel, significant quantities of absorbent material, etc.) shall be placed into US DOT-approved 30-gallon or 55-gallon steel drums. Following cleanup, the container shall be secured and appropriately labeled to identify the contents and the date of the spill/cleanup. Containers shall be stored indoors and provided with secondary containment until transported off-site for disposal.

6. For spills that do not involve flammable liquids or other potential hazardous wastes, small quantities of used absorbent materials may be double bagged and disposed of along with municipal trash as long as all liquids have been absorbed (no free liquid may be present).

7. If the spilled material is a flammable liquid, corrosive liquid (pH ≤ 2 or ≥ 12.5), or other potential hazardous waste, all recovered product, impacted material, and used absorbent must be placed into a US DOT-approved containers/drums. Following cleanup, the container(s) shall be secured and appropriately labeled to identify the contents and the date of the spill/cleanup. Containers shall be stored indoors and provided with secondary containment until transported off-site for disposal. The facility Superintendent/ Supervisor, or designee shall be notified that a potential hazardous waste was released and that a waste characterization may be needed to facilitate proper disposal.

8. Surfaces that are contaminated by the spill shall be cleaned utilizing dry absorbent material. Tools and equipment that have been used in the cleanup must be decontaminated immediately after use. Decontamination water (if used) must be minimized, containerized, and disposed of properly.

9. If waste requires disposal, notify the facility Superintendent/Supervisor, or designee who will arrange for the proper characterization and disposal of any waste material. Representative sampling and analysis may be necessary to properly characterize the waste. The waste must be transported and disposed of in compliance with all applicable laws and regulations. Waste manifests, trip tickets, or bills of lading (if required) for waste disposal shall be kept on file.

10. Facility personnel shall restock/replace spill response equipment and absorbent materials used during the clean-up efforts.

11. The facility Superintendent/Supervisor, designee, or other appropriate County personnel shall be notified of the spill in accordance with ***Section D*** of this document.

C. Response to "Major" Spill

A "Major" spill is any discharge that does not meet the definition of a "Minor" spill. Any employee or contractor observing, being involved with, or recognizing a potential or actual spill of oil or other hazardous material, other than a "Minor" spill is responsible for performing the following actions:

1. If there is no danger to human health, attempt to stop and contain the spill at the source. If the spilled material is unknown, if PPE other than that which is typically used in your work area, is necessary to approach the spill area, or if assistance is required to stop the spill, do not attempt to contain the spill. If the spill is related to a fuel dispensing system, activate the Emergency Shut-Off (ESO) switch.

2. Most County employees lack the appropriate training to respond to "Major" spills. If the spill is of an unknown substance, is of a quantity that cannot be safely managed, or poses other risks beyond the training level of the employee, the employee should not attempt to contain or clean up the spill.

3. Evacuate individuals from the area and keep personnel away from the impacted area.

4. Immediately notify the facility Superintendent/Supervisor, or designee of the incident. The notified individual will determine the need for further evacuations and contact emergency response personnel (911), as necessary. *If a situation represents an immediate and grave danger to personnel, the public, structures, or other infrastructure, the individual discovering the incident may call 911 directly without first notifying facility management.*

5. The facility Superintendent/Supervisor or designee will determine if assistance from emergency response contractors is required to clean up the incident and will coordinate such spill response efforts with spill response contractors and other County agencies and first responders.

6. Facility personnel will provide assistance to emergency responders, as appropriate.

D. Reporting a Spill (Internal Notifications)

1. Once a spill is contained and cleanup operations have been initiated, the individual discovering the spill shall notify the appropriate County representatives and provide the following information:

    a) Identify the location, date, and time of the incident;
    b) Identify the type of material spilled or discharged;
    c) Estimate the quantity spilled and the rate of the spill;
    d) Identify the cause of the spill or discharge;
    e) Identify impacted media or infrastructure (soil, storm drains, open water bodies, etc.);
    f) Determine the extent of injuries involved; and
    g) Provide response measures implemented by the facility personnel.

E. Reporting a Spill (Regulatory Notifications)

State of Maryland Reporting Requirements (COMAR 26.10.01.05)

1. Upon discovery of a spill, the Responsible Person shall notify the MDE Emergency Response Division **within two (2) hours** by calling 866-633-4686. The caller shall be prepared to provide the following information:

    a) The time and date of the spill;
    b) The location and cause of the spill;
    c) The mode of transportation or type of facility involved;
    d) Type and quantity of oil spilled;
    e) Details regarding any assistance required;
    f) The name, address, and telephone number of the person making the report; and
    g) Any other pertinent information requested by the Department.

2. MDE will provide further guidance on additional responsibilities.

3. Within **ten (10) working days** of the completed removal and clean-up activities, the Responsible Person shall prepare a report using either County letterhead detailing the incident. The report shall contain the following:

    a) Date, time, and place of the spill;
    b) The amount and type of oil or hazardous substance spilled;
    c) A complete description of circumstances that contributed to the spill;
    d) A complete description of the containment and removal operations performed, including disposal sites to which oil refuse was transported;
    e) Procedures, methods, and precautions instituted to prevent the recurrence of an oil spill from the facility involved;
    f) Any other information considered necessary or required by the MDE for a complete description of the incident; and
    g) A certification that the information provided is true and correct to the knowledge of the person signing the report.

4. The completed report shall be submitted to mdeerd.mema@maryland.gov or faxed to 410-537-3932.

5. A digital copy of the completed report and any accompanying documentation shall be retained

Federal Reporting Requirements - National Response Center (40 CFR 110)

1. If any of the following criteria are met the Responsible Person shall notify the National Response Center (NRC) **within two (2) hours** of the spill discovery by calling 800-424-8802 or 202-426-2675.

    - ❖ The spill has caused a film, sheen, or discoloration of the surface water or shorelines;
    - ❖ The material spilled will violate applicable water quality standards (surface water or groundwater); or
    - ❖ The spill has caused a sludge or emulsion to be deposited beneath the surface of the water or on the shoreline.

2. At a minimum, the following information shall be provided to the NRC:

    a) Name, organization, and telephone number of reporting party;
    b) Name and address of the responsible party;
    c) Date, time, and location of the incident;
    d) Source and cause of the discharge;
    e) Type of material(s) discharged;
    f) Quantity of materials discharged;
    g) Danger or threat posed by discharge;
    h) Number and types of injuries (if any);
    i) Weather conditions at the incident location; and
    j) Other information to help emergency personnel respond to the incident.

3. If unable to report to the NRC, reports can be made to the EPA Regional Office at 800-438-2474 or the U.S. Coast Guard (USCG) at 202-372-1001. The NRC, EPA, or USCG will provide further guidance.

4. A digital record of the NRC notification and any accompanying documentation shall be retained on-site.

Federal Reporting Requirements - EPA Regional Administrator (40 CFR 112.4)

1. If the facility where the spill occurred is regulated under 40 CFR 112 and is required to have a Spill Prevention, Control, and Countermeasures (SPCC) Plan, the Responsible Person shall report the spill to the EPA Region III Administrator when any of the following criteria are met:

   - ❖ More than 1,000 gallons of oil is discharged to navigable waters or adjoining shorelines in a single incident; or
   - ❖ More than 42 gallons of oil is discharged to navigable waters or adjoining shorelines in each of two incidents occurring within any twelve-month period.

2. The report shall be made in writing **within 60 days** of the spill and shall contain:

   a) Name and location of the facility;
   b) Owner/operator name;
   c) Maximum storage/handling capacity of the facility and normal daily throughput;
   d) Corrective actions and countermeasures taken;
   e) Adequate description of the facility including maps, and flow diagrams;
   f) Cause of the discharge to navigable waters, including a failure analysis;
   g) Additional preventative measures taken or planned to minimize discharge reoccurrence; and
   h) Other information required by the EPA Regional III Administrator.

3. The report shall be submitted to the EPA Regional Administrator at the following address:

   EPA Regional Administrator
   US EPA Region 3
   1650 Arch Street (3RA00)
   Philadelphia, PA 19103-2029

4. A copy of the report shall be retained in the facility SPCC Plan.

Appendix D

Training Records

GOOD HOUSEKEEPING PLAN (GHP)
TRAINING ATTENDANCE LOG

FACILITY NAME: _____

DATE	NAME *(PRINT)*	SIGNATURE

By signing I affirm that I have completed the required annual training; and I am aware of and understand my responsibilities under this Plan.

GOOD HOUSEKEEPING PLAN (GHP)

Winters Run Pumping Station
2601 Perry Avenue
Edgewood, MD 21040

June 30, 2025

TABLE OF CONTENTS

1.0 BACKGROUND & INTRODUCTION 1
1.1 Objectives 1
1.2 Potential Stormwater Pollutants 1
2.0 RESPONSIBILITIES 3
2.1 GHP Implementation 3
2.2 Plan Review and Modification 3
2.3 Inspections 3
2.3.1 GHP Site Inspections 3
2.3.2 Conveyance System Inspections 4
2.4 Training 4
3.0 BEST MANAGEMENT PRACTICES (BMPs) 5
3.1 Applicability of BMP Fact Sheets 5
3.2 BMP Fact Sheets 5

List of Tables

TABLE 1-1 POTENTIAL STORMWATER POLLUTANTS AND THEIR SOURCES 2

List of BMP Fact Sheets

GH-01 - Waste Management
GH-02 - Vehicle and Equipment Storage
GH-03 - Vehicle/Equipment Refueling
GH-04 - Vehicle Maintenance
GH-05 - Vehicle/Equipment Washing
GH-06 - Material Storage
GH-07 - Aboveground Storage Tanks
GH-08 - Resident Drop-Off Centers
GH-09 - Stockpiles
GH-10 - Deicing Materials

Appendices

Appendix A: GHP Site Inspection Checklist
Appendix B: GHP Stormwater Conveyance Inspection Checklist
Appendix C: General Spill Response Procedures
Appendix D: Training Records

List of Acronyms

AST	-	Aboveground Storage Tank
BMP	-	Best Management Practice
CFR	-	Code of Federal Regulations
GHP	-	Good Housekeeping Plan
MDE	-	Maryland Department of the Environment
MS4	-	Municipal Separate Storm Sewer System
NPDES	-	National Pollutant Discharge Elimination System
SPCC	-	Spill Prevention, Control, and Countermeasure Plan

1.0 BACKGROUND & INTRODUCTION

Polluted stormwater runoff has the potential to enter the County's storm sewer systems (referred to as a municipal separate storm sewer system or MS4), and then discharge, untreated, into local water bodies. To address this potential stormwater pollution, the County is required to obtain a NPDES permit from the Maryland Department of the Environment (MDE). The NPDES Permit requires the County to take actions to prevent stormwater pollution, maintain storm sewer systems, monitor stormwater discharges, and develop and implement comprehensive management programs to minimize the discharge of pollutants from the storm sewer system.

To comply with Part IV.D.4.b of the County's Phase I MS4 Permit, the County must develop, implement, and maintain a Good Housekeeping Plan (GHP) for certain County-owned properties not required to be covered under Maryland's General Permit for Discharges from Stormwater Associated with Industrial Activities *(General Permit 12-SWA / 20-SW).*

To support this effort, a *"Good Housekeeping Plan Applicability Certification"* has been developed to evaluate and document if a specific County-owned facility is subject to the GHP requirements. The *"GHP Applicability Certification"* includes the following ten (10) potential stormwater polluting activities. If any of the covered activities are performed at the facility, then that facility is required to implement a site-specific GHP. The GHP will include each of the potential stormwater polluting activities identified in the *"GHP Applicability Certification"* and corresponding pollution prevention procedures.

- Waste Management
- Vehicle and Equipment Storage
- Vehicle/Equipment Refueling
- Vehicle Maintenance
- Vehicle/Equipment Washing
- Material Storage
- Aboveground Storage Tanks
- Resident Drop-Off Center
- Stockpiles
- Deicing Materials

1.1 Objectives

The GHP was developed to outline suitable practices, procedures, and protocols, or Best Management Practices ("BMPs") for reducing and/or preventing stormwater pollution associated with operations at covered County-owned properties. The intent of the pollution prevention procedures included in the GHP is to limit the release of materials with the potential to impact stormwater, this includes reducing or eliminating (to the extent practical):

- The occurrence of spills and leaks;
- The accidental dumping or release of materials;
- The accumulation of waste, trash, debris, unused parts/equipment, etc.;
- The exposure of hazardous materials to precipitation/run-off;
- Stormwater run-off contamination by improperly stored materials; and/or
- Illicit discharges to the storm drain system.

1.2 Potential Stormwater Pollutants

Table 1-1 on the following page provides a list of common potential pollutants that may result from the GHP-regulated activities identified above. Understanding the sources of these pollutants can help in achieving the goals and objectives of the GHP program.

TABLE 1-1 POTENTIAL STORMWATER POLLUTANTS AND THEIR SOURCES

		Waste Management	Vehicle/Equipment Storage	Vehicle/Equipment Refueling	Vehicle Maintenance	Vehicle/Equipment Washing	Material Storage	Aboveground Storage Tanks	Resident Drop-Off Center	Stockpiles	Deicing Materials
Pollutants	**Sources**	**Associated GHP Activity**									
Sediment	Land disturbance; erosion; paved surfaces; material stockpiles; waste storage; salt/abrasive application	X				X	X		X	X	X
Hydrocarbons *(petroleum compounds)*	Leaking vehicle and equipment; vehicle and equipment cleaning; spills; improper storage; maintenance activities; scrap metal disposal; improper disposal	X	X	X	X	X	X	X	X		
Metals	Vehicle brake and tire wear; vehicle/equipment exhaust; batteries; galvanized metal; paint and wood preservatives; fuels, pesticides, and cleaners; vehicle fueling, maintenance, and washing; industrial waste	X	X	X	X	X	X	X	X		
Toxic Chemicals	Pesticide application; improper chemical storage; leaks and spills from storage containers; leaking vehicles; maintenance activities	X	X		X	X	X	X	X		
Chlorides	De-Icing chemicals										X
Trash/Debris	Improper waste storage and disposal; leaking trash containers; littering; poor housekeeping	X	X				X		X		
Nutrients (nitrogen and Phosphorus)	Fertilizers; malfunctioning septic systems; sewer overflows; animal/pet waste; vehicle washing; decaying grass and leaves; leaking trash containers; atmospheric deposition	X				X	X		X		

2.0 RESPONSIBILITIES

2.1 GHP Implementation

A separate GHP is required for each covered facility. The following individual *(identified by name and/or title)* is accountable for the administration and implementation of the GHP at this facility and has the authority to commit the necessary resources to implement this Plan.

_____

Name and/or Title of Responsible Person

The Responsible Person listed above shall ensure that facility personnel involved in any GHP-covered activities identified in this Plan, are provided with access to, and are familiar with, the contents of this Plan.

2.2 Plan Review and Modification

The *"GHP Applicability Certification"* completed for this facility must be reviewed and updated once every permit term, or within one (1) year of substantial changes to a facility's operations that could reasonably contribute to stormwater pollution. Any newly constructed/acquired facility must be assessed within one (1) year of initiating operations at the facility. The facility's GHP must be amended and reissued to the facility within one (1) year of any changes to the facility's *"GHP Applicability Certification"*.

When warranted, the BMP Fact Sheets provided in Section 3.0 may need to be updated or revised. At the same time, additional BMP Facts Sheets may be added. The need for such updates or modifications will be at the discretion of the County's GHP Program Administrator.

2.3 Inspections

The County's MS4 permit requires each facility covered by a GHP to have the following:

1. Written procedures for annually assessing County properties to prevent the discharge of pollutants, spills, and leaks into the County's storm sewer system; and

2. Written procedure for performing stormwater conveyance system inspections and for removing debris that may cause clogging, backups, and flooding.

To meet these requirements, each facility that is covered by a GHP will be required to complete routine site inspections and stormwater conveyance system inspections as detailed below. Facility management will be responsible for ensuring the necessary inspections are completed within the required timeframes, that corrective actions (if needed) are performed, and that records of inspections and completed corrective actions are maintained for at least five (5) years.

2.3.1 GHP Site Inspections

The GHP Site Inspection will be performed to ensure that each GHP-covered facility is being properly maintained and that there are no visible signs of pollutants entering the stormwater system. GHP facilities shall utilize the *"GHP Site Inspection Checklist"*, provided in ***Appendix A*** to complete the required inspection. At a minimum, each facility is to be inspected every five (5) years.

2.3.2 Conveyance System Inspections

Stormwater conveyance systems are generally comprised of curbs and gutters, catch basins, inlet structures, swales, channels, piping, culverts, detention ponds, outfalls, or other structures that are used to collect, contain, and convey stormwater runoff.

The unimpeded movement of stormwater through conveyance systems is critical in avoiding backups and flooding, which can impede facility operations and damage property. Routine inspections and preventative care of stormwater conveyance systems can ensure these systems function as intended and prevent the need for costly and time-consuming repairs and retrofits.

Each GHP-covered facility is required to conduct routine stormwater conveyance system inspections to ensure the free flow of stormwater within the conveyance systems. GHP-covered facilities shall utilize the *"GHP Stormwater Conveyance System Inspection Checklist"*, provided in ***Appendix B*** to complete the required inspections. At a minimum, facility conveyance system inspections are to be conducted every five (5) years.

2.4 Training

As part of the GHP requirements within the County's Phase I NPDES permit, annual training must be provided to all appropriate staff and contractors. Such training shall be provided to any individuals responsible for implementing the GHP, performing the required inspections, or involved in any of the GHP-covered activities identified in this Plan. The required training shall focus on the duties and responsibilities assigned to site personnel in implementing the GHP and the best management practices (BMPs) prescribed in this Plan for preventing, reducing, and eliminating the discharge of pollutants during facility activities.

The County's MS4/GHP Program Coordinator will be responsible for developing the required training and disseminating it to GHP-covered facilities. Each GHP-covered facility will be responsible for identifying staff/contractors who must attend annual training, ensuring identified staff complete the required training, and maintaining records that document training dates and attendees. Training records and other documentation shall be maintained in ***Appendix D*** of this Plan.

3.0 BEST MANAGEMENT PRACTICES (BMPs)

This section contains a BMP Fact Sheet for each of the ten (10) GHP-regulated activities. The County's operations are not limited to the BMPs contained within this document; nor is the County required to implement all of the pollution prevention measures identified within each BMP Fact Sheet. The County should select and implement those measures that are applicable and have the greatest potential for reducing stormwater pollution.

The BMP Fact Sheets contained within this document offer recommended protocols for a particular activity. These pollution prevention measures are considered non-structural BMPs with a focus on source control of potential pollutants.

3.1 Applicability of BMP Fact Sheets

The *"GHP Applicability Certification"* completed for this facility has identified the activities conducted at this facility that require coverage under this Plan. Each of the BMP Fact Sheets shall be marked as to whether they are applicable or not applicable to this facility. The Applicable/Not Applicable indicator on each BMP Fact Sheet can be revised in response to changes in operations at the facility.

3.2 BMP Fact Sheets

BMP Fact Sheets can be found on the following pages. For the sake of consistency, the general outline of a BMP Fact Sheet will be as follows:

- Identification of GHP-covered activity.
- Applicability of the BMP Fact Sheet to the facility.
- A general description of the concern the activity poses to stormwater.
- Recommended pollution prevention measures for reducing/eliminating stormwater pollution.
- Additional sources of information, if applicable.

WASTE MANAGEMENT

Not Applicable ☒ Applicable ☐

CONCERN

Improperly managed waste can allow trash and debris to be washed into storm drains which poses a concern to water quality, marine life, and public health. It also has the potential to create obstructions in the drainage system, which can lead to backups and flooding. Additionally, improper storage and handling of waste materials can allow pollutants including oils and greases, toxic and chemical compounds (including nutrients), bacteria, metals, and other potentially hazardous wastes to enter waterways.

POLLUTION PREVENTION MEASURES

General *(applicable to all waste management activities)*

1) Provide suitable containers, preferably with working covers, to collect waste materials.
2) Ensure that appropriate waste containers are available in areas where waste is generated.
3) Provide a cover over waste storage areas, if feasible.
4) Avoid positioning waste receptacles near storm drains, water bodies, or areas of concentrated runoff.
5) Ensure that lids to waste containers *(if present)* are kept closed to prevent the intrusion of precipitation and prevent trash from blowing out of the receptacle.
6) For waste receptacles, which do not have lids and could leak, containers should be inspected regularly and controls (e.g., containment, spill response, etc.) shall be enacted whenever leaks or dry-weather discharges are observed.
7) Routinely inspect waste containers, roll-offs, compactors, and other waste receptacles for the presence of excessive waste accumulation and overflowing containers.
8) Ensure that wastes accumulating on the ground are placed in a suitable waste container.
9) Ensure that wastes are removed from the facility regularly by a licensed and contracted vendor.
10) Repair or replace damaged waste container lids.

Trash Compactors

1) Routinely inspect trash compactors for malfunctioning equipment or leaking hydraulic oil and provide the appropriate spill response if leaking equipment is encountered.
2) Regularly inspect compactors for leaking fluids and implement appropriate controls such as spill response/cleanup, collection or diversion of released fluids, providing secondary containment, etc. whenever leaks or dry-weather discharges are observed.

Scrap Metal Collection Containers

1) Avoid placing oily or grease-covered items in uncovered scrap metal recycling collection containers. If needed, wrap oily/greasy items in plastic garbage bags before placing them in the collection container.

Hazardous/Universal Wastes

1) Ensure that hazardous waste and universal wastes (e.g., batteries, bulbs, etc.) are collected and stored indoors or within covered collection containers.
2) Verify that hazardous/universal waste collection containers are in good condition, not leaking, and compatible with the wastes being stored.

Street Sweeping / Vactor Truck Material Storage

1) Do not site storage areas near storm drains, open water bodies, or areas of concentrated runoff.
2) Install sediment control devices (e.g. silt fence, silt socks, hay bales, etc.) around the staging area. Inspect these controls regularly and replace them as needed.
3) Cover the materials staging area, if feasible.
4) Provide oil-absorbent booms if necessary to control oily discharge. Inspect and replace booms regularly.
5) The staging area should be checked periodically for evidence of sediment migrating outside of the staging area. Material that has migrated out of the staging area should be promptly swept and returned to the staging area or disposed of.

Waste Cooking Oil/Grease

1) Maintain storage containers indoors or within a covered location, if feasible.
2) Storage containers shall be secured to prevent infiltration of precipitation and accidental/intentional spills or releases.
3) Carefully transfer waste oil/grease to the appropriate collection container to avoid spills.
4) Maintain suitable spill response equipment near collection containers. Immediately clean up any spilled oil/grease. Keep the exterior of the collection container clean and free of spilled oil/grease.
5) Provide secondary containment for collection containers, if feasible.

VEHICLE AND EQUIPMENT STORAGE

Not Applicable ☒ Applicable ☐

CONCERN

Vehicles and equipment may be stored onsite to support various County operations (e.g., construction, maintenance, snow removal, roadside assistance, mass transit, mowing, etc.). Examples of County owned and operated vehicles and equipment stored onsite at any given time include but are not limited to, the following: cars, trucks, buses, emergency response vehicles, garbage trucks, heavy equipment (backhoes, frontend loaders, etc.), forklifts, towable generators, portable light stands, and roadside equipment. Vehicle and equipment storage is considered a pollutant source due to the potential for incidental releases of petroleum products, lubricants, and various automotive fluids.

POLLUTION PREVENTION MEASURES

1) When possible/practical, store vehicles and equipment inside or under cover to prevent exposure to precipitation.
2) If vehicles or equipment must be stored outside, store vehicles/equipment in designated areas away from areas of concentrated runoff, storm drains, and other stormwater conveyances.
3) Vehicles and equipment shall be staged on impervious (asphalt or concrete) surfaces;
4) Keep truck beds clean and ensure potential stormwater pollutants are stored in closed containers, covered, or otherwise protected from stormwater exposure.
5) Conduct routine visual inspections of vehicles and equipment for the presence of leaks and respond accordingly.
6) Leaking vehicles/equipment should be moved inside or under cover. At a minimum, drip pans or absorbent pads shall be used to contain the leak until the vehicle/equipment can be relocated and the leak addressed.
7) Drain all fluids from wrecked or heavily damaged vehicles and equipment before storage.
8) Have an adequate supply of appropriate spill response equipment readily available and clean up all spills and leaks immediately utilizing dry cleaning techniques (e.g. absorbents and brooms).
9) Train staff in spill response so that incidents are addressed in a timely fashion.
10) Do not wash down areas where leaks have collected on ground surfaces; use dry cleaning methods such as granular absorbents and brooms.

VEHICLE AND EQUIPMENT REFUELING

Not Applicable ☒ Applicable ☐

CONCERN

Refueling activities associated with County vehicles and equipment can result in a discharge of fuel (gasoline and diesel fuel), which has the potential to enter the storm drain system and/or a nearby waterway. Such releases can introduce hydrocarbons, metals, and other toxic chemicals to stormwater runoff.

POLLUTION PREVENTION MEASURES

General Procedures *(applicable to all refueling activities)*

1) Routinely *(at least daily)* inspect the fuel dispensing area for any spills or leaks.
2) Routinely inspect fuel dispensing equipment looking for leaking or damaged equipment. Damaged or malfunctioning equipment shall be taken out of service until it has been repaired.
3) Fuels will only be dispensed into authorized vehicles, equipment, and approved containers.
4) Vehicle operators must remain outside of their vehicles and in attendance of fuel dispensers at all times while dispensing fuel.
5) Third-party contractors must be trained in proper refueling procedures and pollution prevention.
6) Do not utilize a foreign object to keep the dispenser nozzle in the open position. If present, a “hold-open” latch on the nozzle may be used.
7) Do not “top off” a vehicle’s fuel tank once the dispenser nozzle’s automatic shut-off has been activated. Topping off tanks may result in spills. Post signs in fueling areas warning vehicle operators against "topping off" of vehicle fuel tanks.
8) After refueling has stopped, allow several seconds to pass before removing the nozzle and returning it to the dispenser. This will prevent incidental dripping from the nozzle.
9) Employees refueling vehicles shall note the location of the “Emergency Fuel Shut Off” switch, to be used to stop the flow of fuel to the dispensers in the event of a release or emergency.
10) Have an adequate supply of appropriate spill response equipment readily available and clean up all spills immediately utilizing dry cleaning techniques (e.g. absorbents and brooms).
11) Immediately clean up and dispose of used absorbent material.
12) Do not wash down fueling areas; use dry cleaning methods such as granular absorbents and brooms.
13) Conduct refueling activities over impervious (e.g. concrete) surfaces. Place drip pans or absorbent pads under the nozzle if fueling occurs over a permeable surface such as grass or soil.
14) Install oil control devices in storm drains that may receive contaminated runoff from fueling areas.
15) Cover fueling areas with a canopy or roof to prevent direct contact with rainfall. Direct run-on away from fueling areas and collect fueling area run-off in a dead-end sump or oil-water separator.

Mobile Equipment Refueling

1) Refuel equipment on an impervious surface, downgradient of, and at the farthest practical distance from any storm drain, stormwater conveyance, stormwater management feature, or waterway.
2) Utilize secondary containment when refueling equipment (when practical).
3) Ensure mobile refuelers are parked in designated locations and away from areas of concentrated run-off, storm drains, and other stormwater conveyances.
4) Ensure that procedures are in place and that staff is properly trained in spill response/cleanup so that leaks and spills are addressed appropriately and promptly.

VEHICLE MAINTENANCE

GH-04

Not Applicable ☒ Applicable ☐

CONCERN

Vehicle and equipment maintenance can impact the water quality of nearby waterways by exposing stormwater to various pollutants including petroleum hydrocarbons, solvents, antifreeze/coolants, used oil, lubricating oil, grease, brake fluid, metals, and various chemicals. Additionally, vehicles that are wrecked or awaiting repair can be a source of pollution if leaking fluids are not properly controlled.

POLLUTION PREVENTION MEASURES

1) Conduct vehicle and equipment maintenance activities indoors.
2) Make sure incoming vehicles and equipment are inspected for leaking fluids and oil.
3) Move leaking vehicles or equipment indoors or under cover as soon as possible. At a minimum, a drip pan or absorbent pads shall be utilized to contain the leak until the vehicle/equipment can be relocated and the leak addressed.
4) Avoid performing maintenance on vehicles in close proximity to exterior doorways, which may allow released fluids to migrate outdoors.
5) Have an adequate supply of appropriate spill response equipment readily available and clean up all spills and leaks immediately utilizing dry cleaning techniques (e.g. absorbents and brooms).
6) Keep maintenance areas neat and well organized. Remove dirt, debris, and used absorbent regularly.
7) Inspect maintenance areas as well as maintenance equipment on a routine basis.
8) Store vehicles, parts, and generated wastes indoors or off the ground and under cover whenever possible. When practical, provide secondary containment.
9) Promptly transfer used fluids to the proper waste container; do not leave full drip pans or other open containers around the shop. Empty and clean drip pans and containers regularly.
10) Waste liquids shall not be poured into floor drains, sinks, outdoor storm drain inlets, or other storm drains or sewer connections. Liquid wastes are to be collected in properly labeled containers and disposed of by a licensed waste hauler or other appropriate method.
11) Store leaking batteries in a sealed container and provide secondary containment, if feasible.
12) Clean all parts indoors utilizing a self-contained parts washer.
13) Do not hose down indoor service areas to storm drains or areas where it can seep into groundwater.
14) Maintain floor drains in good working order and inspect for proper function on a routine basis. Consider plugging floor drains that discharge to the storm sewer.
15) Ensure oil/water separators (if present) are maintained in proper working order and are checked on a routine basis for the presence of oil.
16) If maintenance work must be performed outdoors, adhere to the following requirements:
    - Conduct maintenance activities over an impervious surface, away from stormwater inlets.
    - Cover outdoor maintenance areas and direct stormwater run-on away from the area.
    - Use drip pans or drop cloths underneath the equipment to catch leaks and drips.
    - Have an adequate supply of appropriate spill response equipment readily available.
    - Clean all spills immediately using dry cleaning techniques (e.g. absorbents and brooms).
    - Avoid performing maintenance activities during precipitation events.
    - Limit temporary outdoor maintenance activities to a single shift/day if additional time is needed to cover the work area at the end of each day/shift.

BMP Fact Sheet

VEHICLE AND EQUIPMENT WASHING

GH-05

Not Applicable ☒ Applicable ☐

CONCERN

Vehicle and equipment washing can generate washwater that contains oil, grease, organic compounds, surfactants, phosphates, metals, and suspended solids. If vehicles/equipment are washed outdoors on impervious surfaces, dirty washwater can contaminate stormwater that ends up in waterways. Washing equipment over pervious surfaces can allow washwater to seep into the ground contaminating groundwater.

POLLUTION PREVENTION MEASURES

1) Vehicle and equipment washing should only be conducted in designated indoor wash bays that capture and recycle washwater to the extent practical.
2) Wastewater from the washing facility should be discharged to the sanitary sewer system under the authorization of a wastewater discharge permit issued by the local municipal authority.
3) The floor of indoor vehicle wash bays should be completely bermed or sloped to collect wash water and prevent migration outdoors.
4) No other activities (e.g., fluid changes, repairs, material storage) shall be performed in wash areas.
5) Keep the wash bay neat and well organized. Sweep or pick up all trash and debris daily or as needed.
6) Solid materials accumulated on vehicles or in vehicle beds (e.g. salt, soil, grass, etc.) shall be knocked off or otherwise removed from the vehicle (while inside the wash bay) prior to washing. Solid materials shall be collected and disposed of properly.
7) For vehicles too large to completely fit in the wash bays, only the portion of the vehicle physically located in the confines of the wash bay shall be cleaned. The vehicle shall then be rotated to allow for the remaining portion of the vehicle to be washed.
8) Use nozzles that automatically turn off water when not in use and consider high-pressure, low-volume sprays.
9) Avoid detergents as much as possible. If detergents are necessary, use a biodegradable, phosphate-free detergent.
10) If discharging to an oil-water separator, use a non-emulsifying detergent.
11) Inspect floor drain systems, holding tanks, and conveyances associated with designated wash areas regularly. Maintain oil/water separators and/or process flowthrough separators on a routine basis.
12) Use commercial car washes when vehicle or equipment washing cannot be performed onsite without causing impacts to stormwater.
13) If washing must occur onsite and outdoors, use a designated impervious area that is marked with posted signs indicating proper washing procedures. This area must be bermed to contain the wash water and graded to direct the wash water to the sanitary sewer, an oil-water separator, a holding tank, a dead-end sump, or other containment area. Captured water shall be disposed of properly.
14) Avoid steam cleaning and engine/undercarriage washing which can produce high pollutant concentrations. If steam cleaning or engine washing is necessary, perform such cleanings within isolated indoor areas, and ensure wash water is treated and discharged to the sanitary sewer (if permitted to do so) or captured for off-site disposal.
15) Train staff in proper washing techniques and how to confine washing to designated wash areas.
16) Consider alternatives to washing such as using air to blow grass and debris from small equipment, wet-wiping equipment with rags, etc.

BMP Fact Sheet

MATERIAL STORAGE

GH-06

Not Applicable ☒ Applicable ☐

CONCERN

The storage of petroleum products, chemicals, paints, cleaners, pesticides, fertilizers, bags of erodible materials like sand, cement, and soil, and other potential pollutants can negatively impact surface waters through the accidental releases or leaching of materials into stormwater. Unprotected outdoor storage areas can generate a wide range of stormwater pollutants, such as sediment, nutrients, toxic materials, and petroleum products.

POLLUTION PREVENTION MEASURES

1) Whenever possible, store containers (e.g. drums, bins, bags, cans, and totes) indoors or under cover to limit exposure to stormwater.
2) Designate specific areas for material delivery and storage that are away from heavy traffic areas, storm drains, stormwater conveyances, and areas of concentrated run-off.
3) Designated outdoor storage areas should be paved or consist of an impervious surface.
4) Provide secondary containment for materials whenever possible or required per regulation.
5) Store materials on pallets to prevent stormwater run-on from coming into contact with materials, prevent container corrosion, and allow for better leak detection. Pallets must be in good condition and promptly replaced once damaged or deteriorated.
6) Stack containers according to the manufacturer's recommendations to avoid damage.
7) Immediately replace damaged, corroded, or leaking containers.
8) Ensure all storage containers are clearly labeled with their contents.
9) Keep containers tightly sealed after use.
10) Maintain an accurate inventory of hazardous substances and limit on-site storage to that which is necessary to support facility operations.
11) Keep storage areas neat and well organized; remove debris and unneeded material promptly.
12) If empty drums are stored outdoors, ensure that all openings are equipped with caps to prevent water intrusion and that the drum/storage area is labeled "Empty Drums".
13) Have an adequate supply of appropriate spill response equipment readily available and clean up all spills and releases immediately utilizing dry cleaning techniques (e.g. sweeping/absorbents).
14) Clean up all migrating dry materials upon discovery and address the source of the release.
15) Provide perimeter controls (e.g., berms, rock check dams, etc.) for erodible stockpiles of materials such as mulch, sand, and gravel to prevent migration into the stormwater system.
16) Routinely inspect material storage areas for leaks, material migration, and damaged or corroded containers. Ensure that secondary containment and other perimeter controls are in satisfactory condition.
17) Additional visual inspections of outdoor storage areas should be conducted after significant rainfall events (i.e., greater than 0.5 inches).

BMP Fact Sheet

ABOVEGROUND STORAGE TANKS

GH-07

Not Applicable ☐ Applicable ☒

CONCERN

Aboveground storage tanks (ASTs) may be used to store fuels, automotive fluids, chemicals, or deicing fluids. Leaks from tanks, piping, or other equipment and releases during fluid transfers can all impact stormwater quality. It is critical to maintain ASTs in good working condition to prevent spills and/or releases from occurring. Improperly managed storage tanks can cause significant environmental impacts.

POLLUTION PREVENTION MEASURES

General *(applicable to all storage tanks)*

1) ASTs should be installed and maintained in accordance with COMAR 26.10 and applicable fire codes.
2) ASTs should be provided with secondary containment, whenever feasible or required by regulation.
3) Secondary containment areas shall be maintained clean and dry; drain valves must be kept closed; accumulated liquid shall only be discharged if there are no visible signs of impacts, and in accordance with applicable regulations.
4) Inspect ASTs monthly to identify any leaking or malfunctioning equipment and ensure tanks are functioning as designed.
5) ASTs shall be equipped with a form of liquid-level detection (i.e. sight gauge, electronic monitoring).
6) ASTs shall be equipped with overfill prevention (i.e. overfill alarm and/or overfill prevention valve).
7) Tanks and piping should be protected from vehicle impact via barriers, bollards, guard rails, etc.
8) Install ASTs on solid foundations over impervious surfaces, and away from areas of concentrated run-off, storm drains, and other stormwater conveyances.
9) Properly label all storage tanks (e.g., contents, capacity, etc.).
10) Keep remote fills and fill port spill buckets clean and dry.
11) Keep fill ports, gates, and tank areas secured when not in use to prevent fuel theft and tampering.
12) Have an adequate supply of appropriate spill response equipment readily available and clean up all spills and leaks immediately utilizing dry cleaning techniques (e.g. absorbents and brooms).
13) Facilities that maintain 1,320 gallons or more of aboveground oil products shall prepare and implement a Spill Prevention, Control, and Countermeasure (SPCC) Plan, per 40 CFR 112.
14) Facilities that maintain 1,000 gallons or more of used oil or 10,000 gallons or more of virgin oil in ASTs shall obtain an Individual Oil Operations Permit from the MDE, per COMAR 26.10.01.09.
15) Owners/Operators of facilities that maintain more than 2,500 gallons of oil in ASTs are required to register each AST with MDE, per COMAR 26.10.01.10.

Bulk Fluid Transfers (Deliveries)

1) All bulk fluid transfer operations shall be performed under the direct supervision of knowledgeable County personnel. At no time shall the delivery vehicle or delivery vehicle operator be unsupervised.
2) The product level within the tank must be measured and available capacity verified before delivery.
3) Deliveries shall be made via fill ports equipped with catch basins to capture drips and spills.
4) Ensure an adequate supply of appropriate spill response equipment is readily available.
5) Post signs in delivery area displaying proper delivery procedures and emergency contact information.

ABOVEGROUND STORAGE TANKS

Used Oil Tanks

1) County personnel must verify the level of product in used oil tanks prior to filling.
2) Used oil tanks should only be filled via designated fill ports. Pumping used oil into the tank via a closed piping system is preferred to manually pouring used oil into the tank.

Brine Tanks

1) If multiple tanks are located onsite, the tanks should be plumbed to ensure that the complete failure of one tank will not drain all the tanks in the system (tanks must be isolated).
2) Minimize seeping and leaking at fittings by properly supporting piping and fittings, using flexible connectors or hoses to reduce stress, and installing corrosion-resistant fittings.
3) Consider placing hoses in non-permeable trenches or using drip-less nozzles to reduce repeated small spills.

RESIDENT DROP-OFF CENTER

Not Applicable ☒ Applicable ☐

CONCERN

Resident Drop-Off Centers are publicly accessible facilities where residents can drop off used automotive fluids (i.e. oil or antifreeze), municipal waste, recyclable, and/or organic waste, typically free of charge. Improper transfer or management of the waste materials can allow a number of pollutants including oils and greases, toxic and chemical compounds, nutrients, metals, and other wastes to enter waterways.

POLLUTION PREVENTION MEASURES

General *(applicable to all materials collected)*

1) Clearly identify waste materials accepted by the facility, and clearly mark designated collection areas.
2) Waste material should be inspected by a County representative, prior to disposal.
3) Avoid positioning waste receptacles near storm drains, water bodies, or areas of concentrated runoff.
4) When practical, receiving areas should be covered.
5) Do not allow containers to overflow or waste materials to accumulate on the ground.

Automotive Fluid Collection

1) Used oil, antifreeze, and automotive fluid receiving areas should be on impervious surfaces, covered, and provided with secondary containment, which shall be maintained clean and dry.
2) Provide lidded waste receptacles in the receiving area for the public to dispose of empty containers. Waste receptacles shall be emptied routinely and waste disposed of properly.
3) Collection areas shall be inspected daily and all trash and spilled liquids appropriately cleaned up.
4) The available capacity of waste liquid collection containers shall be routinely verified and waste removals scheduled, as needed.
5) Install appropriate controls to prohibit the overfilling of waste fluid collection containers.
6) Place appropriate spill response equipment in close proximity to drop-off areas.
7) If aboveground tanks are used to collect waste fluids, refer to BMP Fact Sheet GHP-07 (Aboveground Storage Tanks) for additional recommendations.

Organic Debris Collection

1) Routinely transfer collected organic debris/waste to a composting or disposal facility.
2) Do not permit composting of organic waste except at properly designed and permitted facilities.
3) Enact controls to prevent leaves and other windblown debris from entering stormwater inlets.

Municipal Waste / Recyclables Collection

1) Refer to BMP Fact Sheet GHP-01 (Waste Management) for additional recommendations.

BMP Fact Sheet

STOCKPILES

GH-09

Not Applicable ☒ Applicable ☐

CONCERN

The County may stockpile various erodible materials, the type of material can vary depending on the needs of the County. Stockpiled material may include soil, sand, millings, slag, cinders, sawdust, landscaping bark, compost, etc. Exposed stockpiles can easily erode due to wind or precipitation and contribute suspended solids to stormwater runoff.

POLLUTION PREVENTION MEASURES

1) Maintain stockpiles of erodible materials within roofed storage buildings or covered storage bins, if feasible. If not, stockpile material on an impervious surface and cover the stockpile.
2) Temporary stockpiles should be placed on an impermeable membrane (tarp) for quick clean-up.
3) Locate stockpiles away from drain inlets, catch basins, swales, areas of concentrated stormwater flow, water bodies, and environmentally sensitive areas.
4) Divert stormwater flows away from/around the stockpiles using a diversion device (e.g., temporary swale, berm, sandbags, or diversion fence).
5) Cover temporary stockpiles of erodible materials with a tarp that has been adequately secured. The covers must be in place at all times when the stockpile is not in active use.
6) When accessing a portion of the stockpile, only remove a section of the cover to minimize exposure to the elements.
7) Use barriers to isolate stockpiled materials from high-traffic areas to prevent tracking of materials.
8) Sweep (do not wash or hose down) in front of material stockpile storage areas at regular intervals, following loading and unloading activities, and during times of heavy use.
9) If material is observed migrating from the stockpile, clean up all migrated material upon discovery and provide additional controls to reduce migration from the stockpile. If such measures are ineffective implement controls to capture pollutants before they migrate off-site (e.g. silt fencing, inlet filters, filter socks, at-grade inlet protection, etc.).
10) Minimize material stockpile inventory based on historical inventory/usage records and public safety operational needs.
11) Cold mix asphalt shall be stored on and covered with plastic sheeting or comparable material.
12) Routinely inspect outdoor material stockpiles to verify existing controls are functioning properly and for signs of erosion or material transport.

BMP Fact Sheet

DEICING MATERIALS

GH-10

Not Applicable ☒ Applicable ☐

CONCERN

When salt and other de-icing materials are stored outside and uncovered, they have a much higher risk of being eroded and transported offsite by stormwater. Improper de-icing material and sand storage may result in stormwater runoff containing elevated concentrations of sodium chloride and dissolved solids. Sodium chloride (e.g., road salt) is an effective deicer but can be highly corrosive to stormwater facilities. Smaller waterways are at a higher risk to increases in salinity, which can threaten aquatic species. Additionally, runoff containing sodium chloride has the potential to reach drinking water sources where small traces can adversely impact public health.

POLLUTION PREVENTION MEASURES

1) Bagged de-icing chemicals must be stored indoors. If stored outdoors bags must be kept on pallets (off the ground) and covered at all times. Bags must be intact without holes or openings.
2) Bulk de-icing materials shall be stored under cover and on an impervious surface.
3) Bulk salt storage areas/buildings shall not be overfilled so that salt spills out beyond the entrance of the storage area/building.
4) Bulk salt storage areas/buildings shall be maintained in a structurally sound condition and in a way that prevents the release of salt and the infiltration of stormwater. Deicing materials should not touch the sides of metal storage containers.
5) Barriers such as berms, gates, knee walls, tarps, and/or straw bales shall be placed at the entrances of bulk salt storage areas/buildings to prohibit the migration of salt and prevent contact with precipitation/stormwater runoff.
6) Routinely inspect storage areas for migrating materials or deterioration of containment structures. Sweep up all migrating materials upon discovery and repair the source of the migrating pollutant.
7) Loading areas should be constructed of impervious material and covered or enclosed, to the extent practical, to reduce potential contact with stormwater.
8) Minimize the distance de-icing materials are transported during loading/unloading activities.
9) Prevent and/or minimize the spillage of salt and de-icing materials during loading/unloading activities, immediately clean spilled or tracked materials.
10) Sweeping of storage and loading/unloading areas shall be conducted immediately following loading/unloading activities.
11) Do not store de-icing materials (bulk or bagged) over or immediately adjacent to drains or waterways.
12) Control site drainage by diverting stormwater run-on away from storage/loading areas using appropriate measures (e.g., curbing, berms, etc.).
13) Slope storage/loading areas to direct salt-contaminated runoff to an appropriate collection area, and in a manner that prevents the runoff from reaching adjacent soil or surface waters.
14) Excess salt shall be removed from salt handling equipment (trucks, spreaders, etc.) following use/prior to storage. All cleaning shall occur on an impervious surface, which is sloped or curbed to contain any washwater and direct it to a collection area for recycling or proper disposal.

Appendix A

GHP Site Inspection Checklist

GOOD HOUSEKEEPING PLAN (GHP)
SITE INSPECTION CHECKLIST

Facility Name: _____ **Inspection Date:** _____

Inspector Name: _____ **Inspector Signature:** _____

- The intent of this inspection is to ensure that the site is being properly maintained and that there are no visible signs of pollutants entering the stormwater system.
- **A shaded status box designates an item in a non-compliant status. Please provide an explanation for all non-compliant items and subsequently document all corrective actions performed.**
- Retain the completed checklists for five (5) years.

Item	Status			CORRECTIVE ACTIONS/COMMENTS *Items which cannot be corrected immediately must be reported to the GHP/NPDES Program Manager*
	Yes	No	N/A	
GENERAL HOUSEKEEPING				
1. Are exterior areas of the facility free of accumulated trash, debris, and unneeded materials?				
2. Are stormwater drains and inlets free from debris, sediment, and evidence of spills/releases?				
3. Is the facility free from signs of erosion?				
4. Are paved surfaces free of accumulated sediment?				
5. Is spill response equipment available in maintenance areas, fueling areas, hazardous material storage areas, and/or other required areas?				
6. Are spill kits and absorbent materials clearly labeled and accessible (i.e. items are not piled on top of or in front of spill kits)?				
7. Are spill kits secured from being stolen or misused?				
8. Is there a labeled container present for the disposal of used spill cleanup material?				

GOOD HOUSEKEEPING PLAN (GHP)
SITE INSPECTION CHECKLIST

Item	Status			CORRECTIVE ACTIONS/COMMENTS *Items which cannot be corrected immediately must be reported to the GHP/NPDES Program Manager*
	Yes	No	N/A	
9. Does spill response equipment (i.e. spill kits, absorbent materials) need to be replenished?				
WASTE MANAGEMENT				
10. Are areas around solid waste containers/roll-offs/compactors free of excessive trash accumulation or overflowing containers?				
11. Are areas around solid waste containers/roll-offs/compactors free of visible evidence (i.e. leaks, staining) of ongoing stormwater pollution?				
12. Are scrap metal containers in good order and free from evidence of leaking oil/grease?				
13. For dumpsters, roll-offs, and other waste receptacles, where leaks are observed, have appropriate controls (e.g. containment, spill response, etc.) been enacted?				
14. Are the lids (if present) to solid waste containers closed?				
15. Is street sweeping/vactor waste being managed appropriately (i.e. no evidence of material migration)?				
16. Is waste cooking grease managed appropriately (i.e. no evidence of spilled material or excessive staining)?				
VEHICLE & EQUIPMENT STORAGE				
17. Are stored vehicles/equipment free from leaks?				
18. If leaks are present, are they being managed appropriately (drip pan or other methods in place to capture released liquids)?				
19. Are storage areas free of visible evidence of chronic leaks/spills (i.e. significant staining)?				

GOOD HOUSEKEEPING PLAN (GHP)
SITE INSPECTION CHECKLIST

Item	Status			CORRECTIVE ACTIONS/COMMENTS *Items which cannot be corrected immediately must be reported to the GHP/NPDES Program Manager*
	Yes	No	N/A	
VEHICLE & EQUIPMENT REFUELING				
20. Are the areas around refueling areas free from evidence of spills or leaks?				
21. Are refueling areas free of used absorbent material that has not been swept/cleaned up?				
22. Do fuel dispensers and hoses appear to be in good working order and well-maintained?				
VEHICLE MAINTENANCE				
23. Is there any indication that vehicle maintenance activities are being conducted outdoors?				
24. Is there any indication that vehicle maintenance activities are contributing to stormwater pollution?				
VEHICLE & EQUIPMENT WASHING				
25. If performed on-site, does all vehicle/equipment washing occur indoors?				
26. Is wash water collected and disposed of properly?				
27. Is there any indication that vehicle/equipment wash water is being released to stormwater conveyances or pervious areas?				
MATERIAL STORAGE				
28. Are all outdoor storage areas free from visible signs of leaks or spilled material?				
29. Are material storage containers in good condition?				

GOOD HOUSEKEEPING PLAN (GHP)
SITE INSPECTION CHECKLIST

Item	Status			CORRECTIVE ACTIONS/COMMENTS *Items which cannot be corrected immediately must be reported to the GHP/NPDES Program Manager*
	Yes	No	N/A	
30. Are drums, totes, and other containers (that are <u>not</u> empty) stored off the ground and covered, or stored indoors?				
31. Are liquid-containing drums/totes located outdoors provided with secondary containment?				
32. Are containers that are located outdoors equipped with closed lids except when material transfers are occurring?				
33. Are materials, which could impact stormwater, stored away from heavy traffic areas, or protected from vehicle collisions?				
34. Are chemical storage containers properly labeled?				
35. If empty drums are stored outside, are all openings equipped with caps to prevent water intrusion?				
ABOVEGROUND STORAGE TANKS				
36. Are all storage tanks, and surrounding areas free from visible signs of leaks or spilled material?				
37. Do storage tanks appear to be in good working order (e.g. free of obvious signs of damage or malfunctioning equipment)?				
38. Are remote fills associated with tanks free of liquid and debris?				
RESIDENT DROP-OFF CENTERS				
39. Are waste collection areas clearly identified?				
40. Are used oil/antifreeze collection tanks, containment structures, and surrounding areas free from visible signs of leaks or spilled material?				

GOOD HOUSEKEEPING PLAN (GHP)
SITE INSPECTION CHECKLIST

Item	Status			CORRECTIVE ACTIONS/COMMENTS *Items which cannot be corrected immediately must be reported to the GHP/NPDES Program Manager*
	Yes	No	N/A	
41. Do used oil/antifreeze collection tanks appear to be in good working order (e.g. free of obvious signs of damage or malfunctioning equipment)?				
42. Are empty used oil/antifreeze containers being collected and disposed of in the trash?				
43. Are areas around waste/recyclables containers free of excessive trash accumulation or overflowing containers?				
44. Are areas around waste/recyclables containers free of visible evidence (i.e. leaks, staining) of ongoing stormwater pollution?				
45. Are organic debris collection areas free of visible evidence of ongoing stormwater pollution (e.g. leaves and debris in stormwater conveyances)?				
STOCKPILES				
46. Are material piles, including salt, soil, sand, and millings isolated (i.e. covered, bermed, etc.) to prevent stormwater run-on and run-off?				
47. Are areas surrounding material piles (e.g. salt, soil, sand, millings, etc.) free of tracked or migrated material?				
DEICING MATERIALS				
48. Are all deicing materials stored indoors or undercover?				
49. Are salt storage structures in good condition (e.g. no evidence of material escaping or stormwater infiltration)?				
50. Is the salt loading area clean?				

GOOD HOUSEKEEPING PLAN (GHP)
SITE INSPECTION CHECKLIST

Item	Status			CORRECTIVE ACTIONS/COMMENTS *Items which cannot be corrected immediately must be reported to the GHP/NPDES Program Manager*
	Yes	No	N/A	
51. If deicing materials are tarped, is the tarp secure and covering the entire pile?				
52. Are bags of salt stored indoors, or off the ground and covered?				

ADDITIONAL COMMENTS:

Appendix B

GHP Stormwater Conveyance System Inspection Checklist

GOOD HOUSEKEEPING PLAN (GHP)
STORMWATER CONVEYANCE SYSTEM INSPECTION CHECKLIST

Facility Name: _____ **Inspection Date:** _____

Inspector Name: _____ **Inspector Signature:** _____

- The intent of this inspection is to ensure the free flow of stormwater within on-site conveyance systems and prevent damage/flooding.
- **If maintenance is needed, please provide an explanation, and document all corrective actions performed.**
- **Inspections shall include visually accessible infrastructure only; at no time shall inspection personnel enter a confined space.**
- Retain the completed checklists for five (5) years.

Item	Item Checked (Y/N/NA)	Maintenance Needed (Y/N)	CORRECTIVE ACTIONS/COMMENTS *Items which cannot be corrected immediately must be reported to the GHP/NPDES Program Manager*
CATCH BASINS / INLETS			
1. Look for debris and sediment blocking catch basin grates. If found, remove.			
2. Look for damage or cracks to the frame, grate, basin walls or bottom. If found, schedule repairs or replacement.			
3. Look for sediment and debris in the catch basin sump. If sediment fills 60% of the sump or comes within 6” of a pipe it should be scheduled for cleaning.			
4. If any type of filtering device is present, verify that the filter is not clogged, torn, or damaged; clean if clogged, replace if damaged.			
PIPES / CULVERTS			
5. Look for evidence of clogged piping (e.g. visual obstructions, standing water within manholes/inlets structures, etc.). If found, remove or schedule cleaning.			
6. Verify vegetation growth, if present, does not impede water flow. If it does, mow, cut back, or remove.			

GOOD HOUSEKEEPING PLAN (GHP)

STORMWATER CONVEYANCE SYSTEM INSPECTION CHECKLIST

Item	Item Checked (Y/N/NA)	Maintenance Needed (Y/N)	CORRECTIVE ACTIONS/COMMENTS *Items which cannot be corrected immediately must be reported to the GHP/NPDES Program Manager*
7. Inspect for damaged piping, inlets, outlets, headwalls, wingwalls, or excessive erosion. If found, make or schedule repairs.			
DITCHES / TRAPEZOIDAL SWALES			
8. Check for erosion, slumping, or undercutting. If found, make or schedule repairs.			
9. Look for trash and sediment accumulation. Remove all trash and remove sediment if it will impede water flow or clog downstream structures.			
10. Verify vegetation growth does not impede water flow. If it does, mow, cut back, or remove. Remove any trees or shrubs growing within the ditch.			
11. Check the integrity of check dams, filter socks, or other flow dissipation/filtering devices within the ditch or swale. Perform or schedule service if they are clogged, damaged, or deteriorated.			
12. Check inlets and outlets for debris accumulation, damage, or erosion. If found, make or schedule repairs.			

ADDITIONAL COMMENTS:

GUIDANCE DOCUMENT
GOOD HOUSEKEEPING PLAN - STORMWATER CONVEYANCE INSPECTIONS

INTRODUCTION

Maintaining catch basins, stormwater inlets, and other stormwater conveyance structures on a regular basis will remove pollutants, prevent backups, and ensure the system functions as intended to avoid flooding.

Each GHP-covered facility is required to conduct routine stormwater conveyance system inspections to ensure the free flow of stormwater within the conveyance system(s). The GHP includes a *"GHP Stormwater Conveyance System Inspection Checklist"*, to be used when completing the required inspections. This document provides additional background and guidance to aid facility personnel in completing the inspections.

CATCH BASINS / INLETS

Catch basins and inlets are all points for stormwater to enter storm drain systems. These structures are typically part of a larger conveyance system with many interconnected components where the impairment of one component can compromise the functionality of the larger system. Inlets and catch basins are subject to functional impairment by a variety of conditions, including:

- Structural damage including from vehicles and plows
- Cracks/joint separation at piping (inlet and outlet) connections
- Leaking due to cracks and joint separation
- Missing or damaged grates and grate frames
- Corrosion
- Blockage caused by debris, sediment, vegetation, or other objects

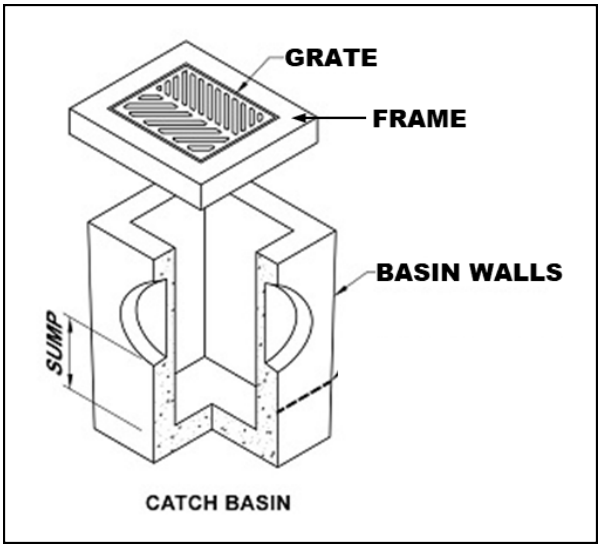

Figure 1 – Catch Basin Diagram

The following photos provide additional information related to the various inspection items, including examples of typical issues that may be encountered. The photo numbers correspond to the inspection checklist item number.

Inspection Item #1 [1]



Debris and sediment blocking inlet/catch basin grate.

Inspection Item #2 [2]



Damaged Grate

Inspection Item #2 [3]



Damaged Frame

Inspection Item #2 [4]



Failing brick walls with a stormwater inlet.

Inspection Item #2 [5]



Failing asphalt surrounding the inlet

[1] Grand Valley State University - https://www.gvsu.edu/groundswell/clogged-storm-drains-71.htm
[2] Georgia Department of Transportation – Stormwater System Inspection and Maintenance Manual, March 2020
[3] https://catchbasinauthority.ca/catch-basin-101/
[4] https://www.fixasphalt.com/catch-basin-repairs
[5] https://ccpia.org/catch-basin-and-manhole-inspections/

Inspection Item #3 [6]



Sediment and debris inside stormwater inlet

Inspection Item #3

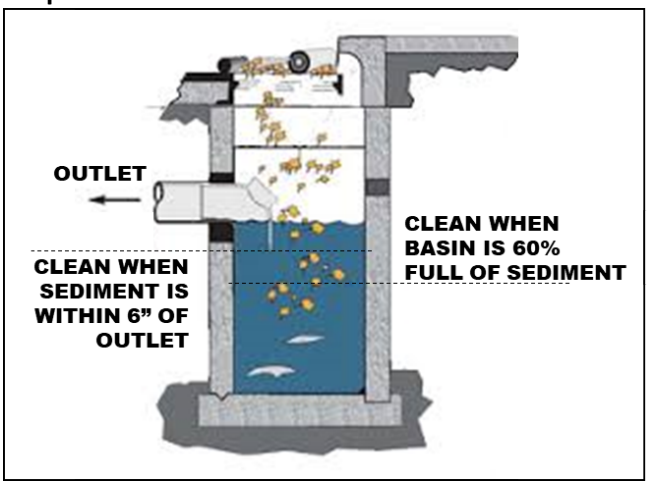

Remove sediment from a catch basin if it fills 60% of the sump or comes within 6" of a pipe.

Inspection Item #4 [7]



Example of inlet filter. Replace when filled or damaged. damaged.

Inspection Item #4 [8]



Example of an inlet filter sock, replace if

PIPES AND CULVERTS

Pipe systems are designed to convey stormwater runoff safely and effectively from inlets to various discharge points and outfalls. A culvert is a structure that channels water under an obstacle such as a roadway or railroad. These structures are subject to functional impairment by a variety of conditions, including:

- Blockage or obstruction due to build up of vegetation, debris, sediment, or other objects
- Cracks and/or joint separation
- Collapsed pipe
- Corrosion
- Root intrusion
- Lack of stabilization

[6] https://www.fixasphalt.com/catch-basin-repairs
[7] https://store.interstateproducts.com/products/Ultra-Drain-Guards/Ultra-Drain-Guard-Adjustable-Frame-Model
[8] https://www.newpig.com/pig-sediment-filter-sock/p/FLT787

Inspection Item #5 [9]



A pipe filled with sediment, inhibiting flow.

Inspection Item #5 [10]



Standing water around an inlet may indicate a blockage.

Inspection Item #6 [11]



Pipe conveyance filled with vegetation.

Inspection Item #7 [12]

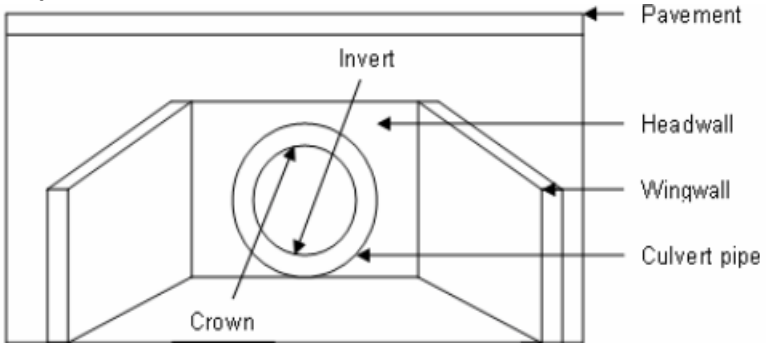

Diagram depicting various components of a culvert.

[9] Georgia Department of Transportation – Stormwater System Inspection and Maintenance Manual, March 2020
[10] https://www3.epa.gov/region9/water/npdes/stormwater-feature.html
[11] Georgia Department of Transportation – Stormwater System Inspection and Maintenance Manual, March 2020
[12] https://www.researchgate.net/figure/Components-of-a-Culvert_fig34_228685906

Inspection Item #7 [13]



A crack is the culvert headwall.

Inspection Item #7 [14]



Evidence of erosion around a culvert.

DITCHES AND SWALES

Ditches and swales serve similar functions. Both are used to convey stormwater. However, there are slight differences. A ditch is a narrow channel typically found along roads and at the edges of parking lots/driveways. A swale is like a ditch, but it is broad and shallow, and usually covered or lined with turfgrass or stone. Issues associated with these structures, which could impede their function include:

- Blockage or obstruction due to vegetation, debris, sediment, or other objects
- Erosion
- Rapidly moving water
- Lack of adequate vegetative cover for grass-lined channels

Inspection Item #8 [15]



Erosion and slumping within a drainage ditch.

Inspection Item #8 [16]



Slumping within a drainage swale.

[13] https://www.sbt-durabi.org/articles/xml/ARN0/
[14] https://lufkindailynews.com/news/local/culverts-crumbling-in-precinct-1/article_a9fed902-4379-5248-ab11-7471e2974298.html
[15] https://graniteseed.com/blog/how-to-stop-a-ditch-from-eroding/
[16] https://www.mnwcd.org/erosion-control

Inspection Item #9 [17]



Litter and debris within a ditch.

Inspection Item #9 [18]



Litter and debris within a swale.

Inspection Item #10 [19]



Cracks and joint separation in concrete channels, removal of vegetation may prevent future damage.

Inspection Item #11 [20]



Rock check dam across a channel.

Inspection Item #11 [21]



Filter sock check dams across a grass swale.

[17] https://craven.ces.ncsu.edu/2023/02/for-those-who-love-to-litter/
[18] https://www.cityoftulsa.org/government/departments/public-works/stormwater-quality/adopt-a-stream/
[19] Georgia Department of Transportation – Stormwater System Inspection and Maintenance Manual, March 2020
[20] EPA Stormwater Best Management Practice, Check Dams, December 2021
[21] EPA Stormwater Best Management Practice, Check Dams, December 2021

Inspection Item #12 [22]



Inlet to a rock-lined swale.

Inspection Item #12 [23]



Sediment accumulation at swale inlet.

END OF DOCUMENT

[22] https://www.stormwater.com/erosion-control/vegetation-management/article/13016118/inlet-protection-during-constructionand-after

[23] https://www.stormwater.com/erosion-control/vegetation-management/article/13016118/inlet-protection-during-constructionand-after

Appendix C

General Spill Response Procedures

SPILL RESPONSE AND NOTIFICATION PROCEDURES

A. Discovery of a Spill

1. Upon discovery of a spill, facility personnel should immediately assess the situation and determine if the spill is considered a "Minor" or "Major" spill. For a spill to be considered "Minor" all the following conditions must be satisfied:

    - ❖ The type of material spilled is known;
    - ❖ The spill is confined to the immediate work area;
    - ❖ The spill has not reached storm drains, sanitary sewer systems, open water, or surrounding soils;
    - ❖ The spill can be safely managed;
    - ❖ The employee can contain and clean up the spill with the PPE that is normally used in the work area;
    - ❖ The spill does not pose a serious threat of fire or an explosion; and
    - ❖ The spill does not pose conditions that are immediately dangerous to life or health.

2. If all the above conditions are met, the spill is considered "Minor". Refer to ***Section B*** of this document for appropriate response actions.

3. If all the above conditions are not met, then the spill is considered "Major". Refer to ***Section C*** of this document for appropriate response actions.

4. If a spill involves flammable liquids, ignitable vapors may be present - precautions must be taken to prevent ignition. Do not turn on or off equipment since sparks may be generated. Additionally, avoid the movement of equipment that could create static electricity. Larger spills of flammable liquids could pose a fire threat and would be considered a "Major" spill. Refer to ***Section C*** for appropriate actions.

B. Response to a "Minor" Spill

1. Identify the source of the spill and the direction in which the spill is heading.

2. Attempt to stop the spill at the source. Where applicable, the source of the spill shall be taken out of service until repairs can be made. If the spill is related to a fuel dispensing system, activate the Emergency Shut-Off (ESO) switch to prevent additional fuel disbursements.

3. If material is released outside a containment area, it is crucial that the material be contained as quickly as possible. Following proper safety procedures, use absorbent materials or diking to contain the spill. Prevent the spill from reaching storm drains, sanitary sewers, or open water. If a spill is flowing toward a drain, install temporary diking around the drain, block off the drain with a drain cover, or place absorbent material around the drain to prevent a discharge.

4. Once the spill has been stopped and contained, estimate the quantity of the spill. Consult applicable Safety Data Sheet (SDS) for material compatibility and environmental precautions. Note and follow recommendations regarding special precautions, spill response equipment, methods, or precautions. All cleanup work shall be conducted in accordance with existing safety protocols and SDS recommendations. Contact the facility Superintendent/Supervisor, or designee, for assistance if needed.

5. Recover or clean up the spilled material as much as possible. Material that cannot be reused must be discarded in accordance with state and federal regulations. Liquids absorbed by porous materials (e.g., wood, gravel, significant quantities of absorbent material, etc.) shall be placed into US DOT-approved 30-gallon or 55-gallon steel drums. Following cleanup, the container shall be secured and appropriately labeled to identify the contents and the date of the spill/cleanup. Containers shall be stored indoors and provided with secondary containment until transported off-site for disposal.

6. For spills that do not involve flammable liquids or other potential hazardous wastes, small quantities of used absorbent materials may be double bagged and disposed of along with municipal trash as long as all liquids have been absorbed (no free liquid may be present).

7. If the spilled material is a flammable liquid, corrosive liquid (pH ≤ 2 or ≥ 12.5), or other potential hazardous waste, all recovered product, impacted material, and used absorbent must be placed into a US DOT-approved containers/drums. Following cleanup, the container(s) shall be secured and appropriately labeled to identify the contents and the date of the spill/cleanup. Containers shall be stored indoors and provided with secondary containment until transported off-site for disposal. The facility Superintendent/ Supervisor, or designee shall be notified that a potential hazardous waste was released and that a waste characterization may be needed to facilitate proper disposal.

8. Surfaces that are contaminated by the spill shall be cleaned utilizing dry absorbent material. Tools and equipment that have been used in the cleanup must be decontaminated immediately after use. Decontamination water (if used) must be minimized, containerized, and disposed of properly.

9. If waste requires disposal, notify the facility Superintendent/Supervisor, or designee who will arrange for the proper characterization and disposal of any waste material. Representative sampling and analysis may be necessary to properly characterize the waste. The waste must be transported and disposed of in compliance with all applicable laws and regulations. Waste manifests, trip tickets, or bills of lading (if required) for waste disposal shall be kept on file.

10. Facility personnel shall restock/replace spill response equipment and absorbent materials used during the clean-up efforts.

11. The facility Superintendent/Supervisor, designee, or other appropriate County personnel shall be notified of the spill in accordance with ***Section D*** of this document.

C. Response to "Major" Spill

A "Major" spill is any discharge that does not meet the definition of a "Minor" spill. Any employee or contractor observing, being involved with, or recognizing a potential or actual spill of oil or other hazardous material, other than a "Minor" spill is responsible for performing the following actions:

1. If there is no danger to human health, attempt to stop and contain the spill at the source. If the spilled material is unknown, if PPE other than that which is typically used in your work area, is necessary to approach the spill area, or if assistance is required to stop the spill, do not attempt to contain the spill. If the spill is related to a fuel dispensing system, activate the Emergency Shut-Off (ESO) switch.

2. Most County employees lack the appropriate training to respond to "Major" spills. If the spill is of an unknown substance, is of a quantity that cannot be safely managed, or poses other risks beyond the training level of the employee, the employee should not attempt to contain or clean up the spill.

3. Evacuate individuals from the area and keep personnel away from the impacted area.

4. Immediately notify the facility Superintendent/Supervisor, or designee of the incident. The notified individual will determine the need for further evacuations and contact emergency response personnel (911), as necessary. *If a situation represents an immediate and grave danger to personnel, the public, structures, or other infrastructure, the individual discovering the incident may call 911 directly without first notifying facility management.*

5. The facility Superintendent/Supervisor or designee will determine if assistance from emergency response contractors is required to clean up the incident and will coordinate such spill response efforts with spill response contractors and other County agencies and first responders.

6. Facility personnel will provide assistance to emergency responders, as appropriate.

D. Reporting a Spill (Internal Notifications)

1. Once a spill is contained and cleanup operations have been initiated, the individual discovering the spill shall notify the appropriate County representatives and provide the following information:

    a) Identify the location, date, and time of the incident;
    b) Identify the type of material spilled or discharged;
    c) Estimate the quantity spilled and the rate of the spill;
    d) Identify the cause of the spill or discharge;
    e) Identify impacted media or infrastructure (soil, storm drains, open water bodies, etc.);
    f) Determine the extent of injuries involved; and
    g) Provide response measures implemented by the facility personnel.

E. Reporting a Spill (Regulatory Notifications)

State of Maryland Reporting Requirements (COMAR 26.10.01.05)

1. Upon discovery of a spill, the Responsible Person shall notify the MDE Emergency Response Division **within two (2) hours** by calling 866-633-4686. The caller shall be prepared to provide the following information:

    a) The time and date of the spill;
    b) The location and cause of the spill;
    c) The mode of transportation or type of facility involved;
    d) Type and quantity of oil spilled;
    e) Details regarding any assistance required;
    f) The name, address, and telephone number of the person making the report; and
    g) Any other pertinent information requested by the Department.

2. MDE will provide further guidance on additional responsibilities.

3. Within **ten (10) working days** of the completed removal and clean-up activities, the Responsible Person shall prepare a report using either County letterhead detailing the incident. The report shall contain the following:

    a) Date, time, and place of the spill;
    b) The amount and type of oil or hazardous substance spilled;
    c) A complete description of circumstances that contributed to the spill;
    d) A complete description of the containment and removal operations performed, including disposal sites to which oil refuse was transported;
    e) Procedures, methods, and precautions instituted to prevent the recurrence of an oil spill from the facility involved;
    f) Any other information considered necessary or required by the MDE for a complete description of the incident; and
    g) A certification that the information provided is true and correct to the knowledge of the person signing the report.

4. The completed report shall be submitted to mdeerd.mema@maryland.gov or faxed to 410-537-3932.

5. A digital copy of the completed report and any accompanying documentation shall be retained

Federal Reporting Requirements - National Response Center (40 CFR 110)

1. If any of the following criteria are met the Responsible Person shall notify the National Response Center (NRC) **within two (2) hours** of the spill discovery by calling 800-424-8802 or 202-426-2675.

    - ❖ The spill has caused a film, sheen, or discoloration of the surface water or shorelines;
    - ❖ The material spilled will violate applicable water quality standards (surface water or groundwater); or
    - ❖ The spill has caused a sludge or emulsion to be deposited beneath the surface of the water or on the shoreline.

2. At a minimum, the following information shall be provided to the NRC:

    a) Name, organization, and telephone number of reporting party;
    b) Name and address of the responsible party;
    c) Date, time, and location of the incident;
    d) Source and cause of the discharge;
    e) Type of material(s) discharged;
    f) Quantity of materials discharged;
    g) Danger or threat posed by discharge;
    h) Number and types of injuries (if any);
    i) Weather conditions at the incident location; and
    j) Other information to help emergency personnel respond to the incident.

3. If unable to report to the NRC, reports can be made to the EPA Regional Office at 800-438-2474 or the U.S. Coast Guard (USCG) at 202-372-1001. The NRC, EPA, or USCG will provide further guidance.

4. A digital record of the NRC notification and any accompanying documentation shall be retained on-site.

Federal Reporting Requirements - EPA Regional Administrator (40 CFR 112.4)

1. If the facility where the spill occurred is regulated under 40 CFR 112 and is required to have a Spill Prevention, Control, and Countermeasures (SPCC) Plan, the Responsible Person shall report the spill to the EPA Region III Administrator when any of the following criteria are met:

   - ❖ More than 1,000 gallons of oil is discharged to navigable waters or adjoining shorelines in a single incident; or
   - ❖ More than 42 gallons of oil is discharged to navigable waters or adjoining shorelines in each of two incidents occurring within any twelve-month period.

2. The report shall be made in writing **within 60 days** of the spill and shall contain:

   a) Name and location of the facility;
   b) Owner/operator name;
   c) Maximum storage/handling capacity of the facility and normal daily throughput;
   d) Corrective actions and countermeasures taken;
   e) Adequate description of the facility including maps, and flow diagrams;
   f) Cause of the discharge to navigable waters, including a failure analysis;
   g) Additional preventative measures taken or planned to minimize discharge reoccurrence; and
   h) Other information required by the EPA Regional III Administrator.

3. The report shall be submitted to the EPA Regional Administrator at the following address:

   EPA Regional Administrator
   US EPA Region 3
   1650 Arch Street (3RA00)
   Philadelphia, PA 19103-2029

4. A copy of the report shall be retained in the facility SPCC Plan.

Appendix D

Training Records

GOOD HOUSEKEEPING PLAN (GHP)
TRAINING ATTENDANCE LOG

FACILITY NAME: _____

DATE	NAME *(PRINT)*	SIGNATURE

By signing I affirm that I have completed the required annual training; and I am aware of and understand my responsibilities under this Plan.

Appendix D4

Harford County, MD Department of Public Works
Watershed Protection and Restoration

Street Sweeping (July 1, 2024 - June 30, 2025)

Robert Cassilly
County Executive

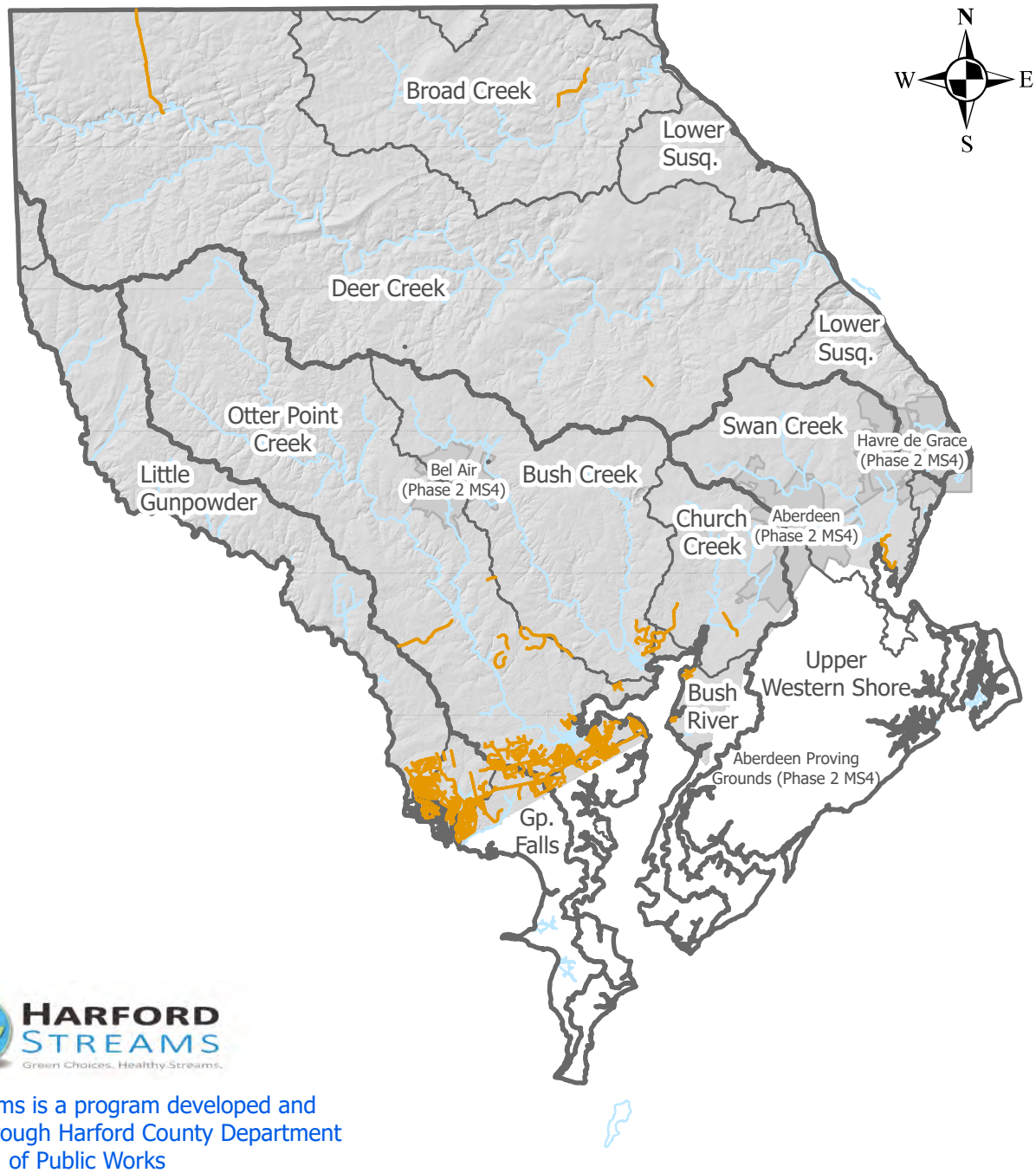

HARFORD STREAMS
Green Choices. Healthy Streams.

Harford Streams is a program developed and administered through Harford County Department of Public Works

0 1 2 4 6 8 Miles

NPDES Phase 1 MS4 Permit 22-DP-3310

Printed 12/2025

www.HarfordCountyMD.gov

HarfordStreams@HarfordCountyMD.gov

www.Facebook.com/HarfordStreams

(410) 638 - 3217

Public Works - Bureau of Highways

Work Order Master Report

Name: **Quiet Sweep Contracted SWEEPING AREA 1** Started: 07/09/2025 Completed:

Routine Maintenance

southern corridor street sweeping

Date	Units	Activity	Crew	Road / Subdivision
12/09/2024	69.48	Sweeping Program #35	GROUNDS MAINTENA	SWEEPING AREA 1(ANCHOR DR/STONE CT)
joppatown street sweeping				
02/27/2025	69.48	Sweeping Program #35	GROUNDS MAINTENA	SWEEPING AREA 1(ANCHOR DR/STONE CT)
sweeping southern corridor				
03/24/2025	69.42	Sweeping Program #35	GROUNDS MAINTENA	SWEEPING AREA 1(ANCHOR DR/STONE CT)
sweeping southern corridor				
05/26/2025	69.48	Sweeping Program #35	GROUNDS MAINTENA	SWEEPING AREA 1(ANCHOR DR/STONE CT)
sweeping in southern corridor				
Total:	**277.86**			

Work Order Labor, Equipment, and Material Details

ID	Description		Hours	Amount
Labor				
QS0001	SWEEP, QUIET		32.00	$0.320
		Total:	**32.00**	**$0.320**

ID	Description		Quantity	Amount
Materials				
[redacted]	[redacted]		[redacted]	$0.000
		Total:	[redacted]	**$0.000**
		Grand Total:	**36.00**	**$0.320**

Public Works - Bureau of Highways

Work Order Master Report

Name: **Quiet Sweep Contracted SWEEPING AREA 2** Started: 07/09/2025 Completed:

Routine Maintenance

southern corridor street sweeping

Date	Units	Activity	Crew	Road / Subdivision
12/09/2024	46.52	Sweeping Program #35	GROUNDS MAINTENA	SWEEPING AREA 2(UNKNOWN/UNKNOWN)
street sweeping southern corridor				
02/26/2025	46.52	Sweeping Program #35	GROUNDS MAINTENA	SWEEPING AREA 2(UNKNOWN/UNKNOWN)
street sweeping southern corridor				
03/24/2025	46.52	Sweeping Program #35	GROUNDS MAINTENA	SWEEPING AREA 2(UNKNOWN/UNKNOWN)
sweeping in southern corridor				
05/27/2025	46.52	Sweeping Program #35	GROUNDS MAINTENA	SWEEPING AREA 2(UNKNOWN/UNKNOWN)
sweeping in southern corridor				
Total:	**186.08**			

Work Order Labor, Equipment, and Material Details

ID	Description	Hours	Amount
Labor			
QS0001	SWEEP, QUIET	32.00	$0.320
	Total:	**32.00**	**$0.320**

ID	Description	Quantity	Amount
Materials			
[redacted]	LOADS TO OTHER	[redacted]	$0.000
	Total:	[redacted]	**$0.000**
	Grand Total:	**36.00**	**$0.320**

Public Works - Bureau of Highways

Work Order Master Report

Name: **Quiet Sweep Contracted SWEEPING AREA 3** Started: 07/09/2025 Completed:

Routine Maintenance

southern corridor street sweeping

Date	Units	Activity	Crew	Road / Subdivision
12/10/2024	50.20	Sweeping Program #35	GROUNDS MAINTENA	SWEEPING AREA 3(UNKNOWN/UNKNOWN)
street sweeping southern corridor				
02/28/2025	50.20	Sweeping Program #35	GROUNDS MAINTENA	SWEEPING AREA 3(UNKNOWN/UNKNOWN)
sweeping southern corridor				
03/25/2025	50.20	Sweeping Program #35	GROUNDS MAINTENA	SWEEPING AREA 3(UNKNOWN/UNKNOWN)
sweeping in southern corridor				
05/27/2025	50.20	Sweeping Program #35	GROUNDS MAINTENA	SWEEPING AREA 3(UNKNOWN/UNKNOWN)
sweeping in southern corridor				
Total:	**200.80**			

Work Order Labor, Equipment, and Material Details

ID	Description		Hours	Amount
Labor				
QS0001	SWEEP, QUIET		32.00	$0.320
		Total:	**32.00**	**$0.320**

ID	Description		Quantity	Amount
Materials				
[redacted]	LOADS TO OTHER		[redacted]	$0.000
		Total:	**4.00**	**$0.000**
		Grand Total:	**36.00**	**$0.320**

Griffith Jr, william

From: Mavris, Stephen <scmavris@harfordcountymd.gov>
Sent: Wednesday, July 9, 2025 11:10 AM
To: Griffith Jr, william
Cc: Shreiner, Brent
Subject: sweeping tonnage collected

Dec 9-10 2024 cycle collected 10.28 tons of debris 1.92/1.72/2.83/1.61/2.2 tons
Feb 3-5 2025 cycle collected 8.28 tons of debris 1.06/1.28/1.55/4.39 tons
Feb 26-28 cycle collected 18.83 tons of debris 7.24/5.39/6.2 tons
Mar 24-25 cycle collected 5.85 tons of debris 4.37/1.48 tons
May 26-27 cycle collected 13.13 tons of debris 3.88/4.3/4.95 tons

I updated the work order notes to reflect daily collections total 56.37 tons Hauled to landfill

Stephen Mavris | Harford County Highways Crew Chief
Grounds Maintenance
1807 North Fountain Green Rd | Belair, MD 21014
office (410) 638-3279 x 7940 | Cell (443) 752-5981 |
scmavris@harfordcountymd.gov | www.harfordcountymd.gov

Public Works - Bureau of Highways

Work Order Master Report

Name: **Sweeping Program 2025** Started: 07/01/2024 Completed: 06/30/2025

Programmed Maintenance

Date	Units	Activity	Crew	Road / Subdivision
07/19/2024	3.00	Sweeping Program #35	1ST DIST	ABINGDON RD [1](RT 924/I-95 BRIDGE)
07/19/2024	1.40	Sweeping Program #35	1ST DIST	SINGER RD [1](RT 24/BEAVER DAM)
07/19/2024	1.12	Sweeping Program #35	1ST DIST	BARKSDALE RD [1](JOPPA FARM RD/BALDWIN
07/19/2024	0.06	Sweeping Program #35	1ST DIST	BRAXTON CT [1](BRADLEY RD/CUL DE SAC)
07/19/2024	0.68	Sweeping Program #35	1ST DIST	BRESLIN RD [1](JOPPA FARM RD/BARKSDALE I
07/19/2024	0.32	Sweeping Program #35	1ST DIST	BALDWIN DRIVE [1](BARKSDALE RD/CDS TO (
07/19/2024	0.20	Sweeping Program #35	1ST DIST	JONATHAN DRIVE [1](FALCONER ROAD/BALD
07/25/2024	1.42	Sweeping Program #35	1ST DIST	TECHNOLOGY DRIVE [1](ROUTE 22/CUL-DE-S.
07/25/2024	1.16	Sweeping Program #35	1ST DIST	TITAN TERRACE [1](ROBIN HOOD RD/END OF
07/25/2024	0.58	Sweeping Program #35	1ST DIST	TELESTAR WAY [1](TITAN TERR/DEAD END)
07/25/2024	0.10	Sweeping Program #35	1ST DIST	MERCURY CT [1](NOVA DR/CUL DE SAC)
07/25/2024	0.48	Sweeping Program #35	1ST DIST	NOVA DR [1](TITAN TERR/APOLLO TERR)
07/25/2024	0.58	Sweeping Program #35	1ST DIST	APOLLO TERRACE [1](TITAN TERR/TELSTAR W
07/29/2024	0.88	Sweeping Program #35	1ST DIST	FOXGLOVE CT [1](CHURCH CREEK RD/CUL DI
07/29/2024	0.10	Sweeping Program #35	1ST DIST	LIATRIS LA [1](FOX GLOVE CT/CUL DE SAC)
07/29/2024	0.18	Sweeping Program #35	1ST DIST	TRILLIUM CT [1](FOX GLOVE CT/CUL DE SAC
07/29/2024	0.14	Sweeping Program #35	1ST DIST	OREGANUM CT [1](FOXGLOVE CT/CUL DE SA(
07/29/2024	1.76	Sweeping Program #35	1ST DIST	GREY'S RUN CIR [1](CHURCH CREEK RD/CHUI
07/29/2024	0.14	Sweeping Program #35	1ST DIST	OVERTON SQ [1](GREYS RUN CI/CUL DE SAC)
07/29/2024	0.40	Sweeping Program #35	1ST DIST	MAGNESS CT [1](GREYS RUN CI/MAGNESS CT
07/29/2024	0.50	Sweeping Program #35	1ST DIST	HAMPTON HALL CT [1](GREY'S RUN CIR/HAM
07/29/2024	0.32	Sweeping Program #35	1ST DIST	TALBOTT SQ [1](HAMPTON HALL CT/TALBOT
07/29/2024	0.34	Sweeping Program #35	1ST DIST	ASHMEAD SQUARE [1](GREY'S RUN CI/ASHME
07/29/2024	0.24	Sweeping Program #35	1ST DIST	CARLYLE GARTH [1](GREY'S RUN CIR/GREY'S
07/29/2024	0.46	Sweeping Program #35	1ST DIST	WINNER'S CI [1](GREYS RUN CI/GREYS RUN C
07/29/2024	0.20	Sweeping Program #35	1ST DIST	SOPHIA'S WAY [1](GREY'S RUN CIR/SOPHIA'S \
07/29/2024	0.24	Sweeping Program #35	1ST DIST	DOWERY LA [1](GREY'S RUN CIR/CUL DE SAC
07/29/2024	0.06	Sweeping Program #35	1ST DIST	CALDWELL CT [1](CHURCH CREEK RD/CALDV
07/29/2024	0.32	Sweeping Program #35	1ST DIST	CALDWELL CT (N) [1](CALDWELL SQ/CALDWI
07/29/2024	0.36	Sweeping Program #35	1ST DIST	CALDWELL CT (S) [1](CALDWELL SQ/CALDWE
07/29/2024	0.26	Sweeping Program #35	1ST DIST	CALDWELL SQ [1](CALDWELL CT/CALDWELL
07/29/2024	2.74	Sweeping Program #35	1ST DIST	CHURCH CREEK RD [1](RIVERSIDE PKWY/RIV
07/29/2024	0.46	Sweeping Program #35	1ST DIST	HALLS CHANCE LA [1](CHURCH CREEK RD/CU
07/30/2024	1.10	Sweeping Program #35	1ST DIST	DECLARATION CIR [1](CHURCH CREEK RD/CH
07/31/2024	1.00	Sweeping Program #35	1ST DIST	FEDERAL LN [1](ABINGDON RD/VALLEY FORC
08/02/2024	0.32	Sweeping Program #35	1ST DIST	CINNAMON TREE DR [1](MERRICK WAY/LONC
08/02/2024	0.34	Sweeping Program #35	1ST DIST	EDITH STONE DR [1](MERRICK WAY/LONG ME
08/02/2024	0.50	Sweeping Program #35	1ST DIST	HOLLY WREATH DR [1](RT 924/LONG MEADOV
08/02/2024	0.94	Sweeping Program #35	1ST DIST	LONG MEADOW DR [1](ST MARY'S CHURCH R
08/02/2024	0.10	Sweeping Program #35	1ST DIST	LOVE GROVE CT [1](MERRICK WAY/CUL DE S.
08/02/2024	0.88	Sweeping Program #35	1ST DIST	MERRICK WAY [1](HOLLY WREATH RD/CUL DI
08/02/2024	1.04	Sweeping Program #35	1ST DIST	PARALLEL PATH [1](LAUREL VALLEY GARTH/L

08/02/2024	1.08	Sweeping Program #35	1ST DIST	LAUREL VALLEY GARTH [1](PARALLEL PATH/I
08/02/2024	0.88	Sweeping Program #35	1ST DIST	ST MARYS CHURCH RD [1](RT 924/LAUREL BU
08/02/2024	0.24	Sweeping Program #35	1ST DIST	WHISPERWOOD CT [1](LONG MEADOW DR/CU
08/02/2024	0.10	Sweeping Program #35	1ST DIST	YARDLEY CT [1](PARALLEL PATH/CUL DE SAC
08/02/2024	0.14	Sweeping Program #35	1ST DIST	WOOD VALLEY CT [1](LAUREL VALLEY GART
08/02/2024	0.14	Sweeping Program #35	1ST DIST	YELLOW BRICK CT [1](LAUREL VALLEY GARI
08/05/2024	1.00	Sweeping Program #35	1ST DIST	WINDY LAUREL WAY [1](BOX HILL PKWY/ABI
Someone spilled a couple Bucks of stone clean up				
08/05/2024	0.50	Sweeping Program #35	1ST DIST	OAKINGTON RD [1](RT 132/COUNTRY CLUB RI
08/05/2024	0.50	Sweeping Program #35	1ST DIST	OLD ROBIN HOOD RD [1](RT 462/ROBIN HOOD
08/13/2024	0.46	Sweeping Program #35	1ST DIST	BENEFIT CT [1](ST CLAIR DR/CUL DE SAC)
08/13/2024	0.24	Sweeping Program #35	1ST DIST	EDEN DR [1](ST CLAIR DR/ST AGNES DR)
08/13/2024	0.12	Sweeping Program #35	1ST DIST	BATA BLVD [1](ROUTE 40/CUL DE SAC)
08/13/2024	0.90	Sweeping Program #35	1ST DIST	ST CLAIR DR [1](RT 924/SINGER RD)
08/13/2024	0.06	Sweeping Program #35	1ST DIST	ST AGNES DR [1](ST CLAIR DR/EDEN DR)
08/13/2024	0.28	Sweeping Program #35	1ST DIST	SILVER SPRUCE LA [1](SINGER RD/VALIANT D
08/13/2024	0.12	Sweeping Program #35	1ST DIST	SCOTCH CT [1](SINGER RD/CUL DE SAC)
08/13/2024	0.75	Sweeping Program #35	1ST DIST	PRESTON LA [1](RT 924/SINGER RD)
08/13/2024	0.36	Sweeping Program #35	1ST DIST	VALIANT DR [1](RT 924/PRESTON LA)
08/13/2024	1.00	Sweeping Program #35	1ST DIST	WILLOUGHBY BEACH RD [1](TRIMBLE RD/KE
08/13/2024	0.16	Sweeping Program #35	1ST DIST	HADDAWAY CT [1](MILLER STONE CT/CUL DE
08/13/2024	0.14	Sweeping Program #35	1ST DIST	HAYNES CT [1](SINGER WOODS DR/CUL DE SA
08/13/2024	0.20	Sweeping Program #35	1ST DIST	LAUREL WOODS DR [1](SINGER WOODS DR/CI
08/13/2024	0.14	Sweeping Program #35	1ST DIST	MILLER STONE CT [1](SINGER WOODS DR/CU
08/13/2024	0.98	Sweeping Program #35	1ST DIST	SINGER WOODS DR [1](SINGER DR/HOLLY WR
08/13/2024	0.66	Sweeping Program #35	1ST DIST	HOLLY WREATH CT [1](RT 924/CUL DE SAC)
09/04/2024	1.00	Sweeping Program #35	1ST DIST	BROOKSIDE DR [1](WATERGATE DR/GILWAY C
09/04/2024	0.76	Sweeping Program #35	1ST DIST	BUSINESS CENTER WAY [1](ROUTE 40/ROUTE
09/04/2024	1.78	Sweeping Program #35	1ST DIST	WOODBRIDGE CENTER WAY [1](RT 40/HANSO
09/04/2024	1.10	Sweeping Program #35	1ST DIST	EDGEWATER DR [1](WATERGATE CT/DEAD EN
09/04/2024	1.56	Sweeping Program #35	1ST DIST	GARNETT RD [1](TRIMBLE RD/CUL DE SAC)
09/05/2024	1.00	Sweeping Program #35	1ST DIST	ABINGDON RD [1](RT 924/I-95 BRIDGE)
09/05/2024	0.25	Sweeping Program #35	1ST DIST	GARNETT RD [1](TRIMBLE RD/CUL DE SAC)
09/13/2024	0.75	Sweeping Program #35	1ST DIST	REGAL DR [1](LAUREL BUSH RD/PARLIAMENT
09/13/2024	1.00	Sweeping Program #35	1ST DIST	AMY DR [1](REGAL DR/PARLIAMENT DR)
09/24/2024	1.00	Sweeping Program #35	1ST DIST	ASHTON WAY [1](WESTOVER LA/TOLLGATE RI
09/24/2024	1.00	Sweeping Program #35	1ST DIST	CRISFIELD DR [1](TOLLGATE PKWY/TOLLGAT
10/01/2024	3.24	Sweeping Program #35	1ST DIST	ABINGDON RD [1](RT 924/I-95 BRIDGE)
10/01/2024	1.00	Sweeping Program #35	1ST DIST	SINGER RD (E) [1](RT 924/RT 24)
10/01/2024	4.40	Sweeping Program #35	1ST DIST	SINGER RD (W) [1](BEAVER DAM DR/RT 152)
10/01/2024	3.58	Sweeping Program #35	1ST DIST	STOCKTON RD [1](RT 152/DEAD END)
10/03/2024	0.32	Sweeping Program #35	1ST DIST	CARVALE DR [1](CARSINS RUN RD/DEAD END
10/03/2024	0.16	Sweeping Program #35	1ST DIST	RONSON CT [1](CARVALE DR/CUL DE SAC)
10/03/2024	2.00	Sweeping Program #35	1ST DIST	CARSINS RUN RD [3](RT 156/RT 22)
10/03/2024	1.20	Sweeping Program #35	1ST DIST	MONTREAL DR [1](STEPNEY RD/GRANDMERE
10/03/2024	0.56	Sweeping Program #35	1ST DIST	CARSINWOOD DR [1](STEPNEY RD/DEAD END
10/03/2024	1.00	Sweeping Program #35	1ST DIST	CARSINWOOD CT [1](CARSIN WOOD DR/CDS
10/03/2024	0.20	Sweeping Program #35	1ST DIST	PILGRIM RD [1](SNAKE LA/DEAD END)



Public Works - Bureau of Highways

Work Order Master Report

10/03/2024	0.16	Sweeping Program #35	1ST DIST	MYSTIC CT [1](PILGRIM RD/DEAD END)
10/03/2024	1.25	Sweeping Program #35	1ST DIST	SNAKE LA [1](RT 22/RT 136)
10/10/2024	0.25	Sweeping Program #35	1ST DIST	BURNT OAK CT [1](KENSINGTON PKWY/CUL
10/10/2024	0.20	Sweeping Program #35	1ST DIST	ALDER CT [1](LAURENTUM PKWY/CUL DE SA
10/10/2024	0.16	Sweeping Program #35	1ST DIST	AUDEN CT [1](LAURENTUM LA/CUL DE SAC)
10/10/2024	0.18	Sweeping Program #35	1ST DIST	ALCONBURY CT [1](KENSINGTON PKWY/CUL
10/10/2024	0.46	Sweeping Program #35	1ST DIST	BOXRIDGE DR [1](RT 924/LAURENTUM PKWY)
10/10/2024	0.14	Sweeping Program #35	1ST DIST	BLUE SILVER RD [1](KENSINGTON PKWY/ABI
10/10/2024	0.08	Sweeping Program #35	1ST DIST	BOX HILL CT [1](KENSINGTON PKWY/CUL DE
10/10/2024	0.08	Sweeping Program #35	1ST DIST	BURNLEY CT [1](KENSINGTON PKWY/CUL DE
10/10/2024	0.16	Sweeping Program #35	1ST DIST	BYRON CT [1](LAURENTIUM PKWY/CUL DE SA
10/10/2024	0.16	Sweeping Program #35	1ST DIST	COLCHESTER CT [1](KENSINGTON PKWY/CUI
10/10/2024	0.12	Sweeping Program #35	1ST DIST	DAINAWAY CT [1](LAURENTUM PKWY/CUL DI
10/10/2024	0.38	Sweeping Program #35	1ST DIST	DUMBARTON DR [1](KENSINGTON PKWY/ABI
10/10/2024	0.08	Sweeping Program #35	1ST DIST	FIRELIGHT CT [1](HARROGATE WAY/DEAD EN
10/10/2024	0.16	Sweeping Program #35	1ST DIST	GATESHEAD CT [1](KENSINGTON PKWY/CUL
10/10/2024	0.12	Sweeping Program #35	1ST DIST	HASTINGS CT [1](DUMBARTON DR/CUL DE SA
10/10/2024	0.42	Sweeping Program #35	1ST DIST	HUXLEY CIR [1](LAURENTUM LA/BOXRIDGE
10/10/2024	2.12	Sweeping Program #35	1ST DIST	KENSINGTON PKWY [1](FALKAND RD/BOXRII
10/10/2024	0.12	Sweeping Program #35	1ST DIST	KIRKWALL CT [1](KENSINGTON PKWY/CUL D
10/10/2024	0.14	Sweeping Program #35	1ST DIST	KINGS MARK CT [1](KENSINGTON PKWY/CUL
10/10/2024	0.14	Sweeping Program #35	1ST DIST	GREENNOCK CT [1](HARROGATE WAY/CUL DI
10/10/2024	0.08	Sweeping Program #35	1ST DIST	MARGATE CT [1](KENSINGTON PKWY/CUL DE
10/10/2024	1.32	Sweeping Program #35	1ST DIST	LAURENTUM PKWY [1](BOXRIDGE DR/FALKL
10/28/2024	4.02	Sweeping Program #35	1ST DIST	LAUREL BUSH RD [1](ABINGDON RD/WHEEL I
10/28/2024	0.66	Sweeping Program #35	1ST DIST	BIGMOUNT CT [1](LAUREL BUSH RD/CUL DE S
10/28/2024	0.18	Sweeping Program #35	1ST DIST	LINDSAY CT [1](SMALLWOOD DR/CUL DE SAC
10/28/2024	0.06	Sweeping Program #35	1ST DIST	ANDROMEDA CT (N & S) [1](RHODODENDRON
10/28/2024	0.70	Sweeping Program #35	1ST DIST	SMALLWOOD DR [1](BIGMOUNT CT/CDS TO C
10/28/2024	0.36	Sweeping Program #35	1ST DIST	RHODODENDRON DR (E) [1](BIG MOUNT CT/L
10/28/2024	0.38	Sweeping Program #35	1ST DIST	COLPEPPER RD [1](BOEING CT/SMALLWOOD I
10/28/2024	0.38	Sweeping Program #35	1ST DIST	BOEING CT [1](SMALLWOOD DR/CUL DE SAC)
10/28/2024	0.32	Sweeping Program #35	1ST DIST	RHODODENDRON DR (W) [1](BIG MOUNT CT/
10/28/2024	0.06	Sweeping Program #35	1ST DIST	TWILIGHT CT [1](COLPEPPER RD/CUL DE SAC
10/28/2024	0.20	Sweeping Program #35	1ST DIST	CHERRY LAUREL CT [1](BIG MOUNT CT/CUL D
10/28/2024	0.18	Sweeping Program #35	1ST DIST	OVERVIEW DR [1](LAUREL BUSH RD/COLPEPI
10/28/2024	1.10	Sweeping Program #35	1ST DIST	LAUREL VALLEY GARTH [1](PARALLEL PATH/I
10/28/2024	1.48	Sweeping Program #35	1ST DIST	PARLIAMENT DR [1](AMY DR/BUTTERFIELD I
10/28/2024	1.02	Sweeping Program #35	1ST DIST	PARALLEL PATH [1](LAUREL VALLEY GARTH/L
10/28/2024	0.90	Sweeping Program #35	1ST DIST	MERRICK WAY [1](HOLLY WREATH RD/CUL DI
10/28/2024	0.94	Sweeping Program #35	1ST DIST	LONG MEADOW DR [1](ST MARY'S CHURCH R
10/28/2024	0.10	Sweeping Program #35	1ST DIST	LOVE GROVE CT [1](MERRICK WAY/CUL DE S.
10/28/2024	0.12	Sweeping Program #35	1ST DIST	YELLOW BRICK CT [1](LAUREL VALLEY GARI
10/29/2024	1.48	Sweeping Program #35	1ST DIST	PARLIAMENT DR [1](AMY DR/BUTTERFIELD I
10/29/2024	0.98	Sweeping Program #35	1ST DIST	ABBEY CIRCLE [1](REGAL DRIVE/REGAL DRI
10/29/2024	1.12	Sweeping Program #35	1ST DIST	REGAL DR [1](LAUREL BUSH RD/PARLIAMENI
10/29/2024	1.00	Sweeping Program #35	1ST DIST	AMY DR [1](REGAL DR/PARLIAMENT DR)

10/29/2024	0.40	Sweeping Program #35	1ST DIST	BREWSTER DR [1](PARLIAMENT DR/T TURN Al
10/29/2024	0.18	Sweeping Program #35	1ST DIST	BUTTERFIELD DR [1](REGAL DR/CDS TO TTA)
10/29/2024	0.14	Sweeping Program #35	1ST DIST	BUCKINGHAM CT [1](REGAL DR/CUL DE SAC)
10/29/2024	0.18	Sweeping Program #35	1ST DIST	CLYDE CT [1](AMY DR/CUL DE SAC)
10/29/2024	0.16	Sweeping Program #35	1ST DIST	SUTTON PL [1](PARLIAMENT DR/ABBEY CI)
10/29/2024	0.12	Sweeping Program #35	1ST DIST	GRAND OAKS CIRCLE [1](GRAND OAKS CT/GI
10/29/2024	0.36	Sweeping Program #35	1ST DIST	GRAND OAKS COURT [1](ST. MARYS CHURCH
10/29/2024	0.20	Sweeping Program #35	1ST DIST	UNNAMED STUB ROAD [1](GRAND OAKS CT/I
10/29/2024	0.40	Sweeping Program #35	1ST DIST	HOLLY WREATH DR [1](RT 924/LONG MEADOV
10/29/2024	0.26	Sweeping Program #35	1ST DIST	WHISPERWOOD CT [1](LONG MEADOW DR/CU
10/29/2024	0.36	Sweeping Program #35	1ST DIST	EDITH STONE DR [1](MERRICK WAY/LONG MI
10/30/2024	1.00	Sweeping Program #35	1ST DIST	ST MARYS CHURCH RD [1](RT 924/LAUREL BU
SR#50350				
10/30/2024	1.24	Sweeping Program #35	1ST DIST	MEADOW VALLEY DR [1](DEER CREEK DR/ME
10/30/2024	0.44	Sweeping Program #35	1ST DIST	DEER CREEK CHURCH RD [3](CHESTNUT HILI
10/30/2024	0.86	Sweeping Program #35	1ST DIST	WINDY LAUREL WAY [1](BOX HILL PKWY/ABI
10/30/2024	0.56	Sweeping Program #35	1ST DIST	LAUREL VIEW DR [1](WINDY LAUREL WAY/MI
10/30/2024	1.04	Sweeping Program #35	1ST DIST	COPPER RIDGE RD [1](STONE TRAIL DR/WIND
10/30/2024	0.52	Sweeping Program #35	1ST DIST	STONE TRAIL DR [1](BOX HILL PKWY/COPPEI
10/30/2024	0.08	Sweeping Program #35	1ST DIST	AUTUMN LEAF CT [1](LAUREL VIEW DR/CUL I
10/30/2024	0.14	Sweeping Program #35	1ST DIST	BENT TWIG CT [1](MEADOW VALLEY DR/CUL
10/30/2024	0.22	Sweeping Program #35	1ST DIST	ARROW WOOD CT [1](MEADOW VALLEY DR/C
10/30/2024	1.52	Sweeping Program #35	1ST DIST	BOX HILL SOUTH PKWY [1](RT 924/ABINGDON
10/31/2024	2.24	Sweeping Program #35	1ST DIST	MONTROSE WAY [1](SINGER ROAD/AIRDRIE A
10/31/2024	0.50	Sweeping Program #35	1ST DIST	GLENROTHS DRIVE [1](SINGER ROAD/KIRKC/
10/31/2024	1.04	Sweeping Program #35	1ST DIST	KIRKCALDY WAY [1](GLENROTH DRIVE/GLEN
10/31/2024	0.90	Sweeping Program #35	1ST DIST	CALLENDER WAY [1](MONTROSE WAY/MONTF
10/31/2024	0.38	Sweeping Program #35	1ST DIST	LANARKSHIRE WAY [1](MONTROSE WAY/CLYI
10/31/2024	0.18	Sweeping Program #35	1ST DIST	MCGONAGALL COURT [1](MONTROSE WAY/CI
10/31/2024	0.06	Sweeping Program #35	1ST DIST	SCOTTISH ISLE COURT [1](SCOTTISH ISLE DR
10/31/2024	0.28	Sweeping Program #35	1ST DIST	FALKIRK COURT [1](MONTROSE WAY/CUL DE
10/31/2024	0.12	Sweeping Program #35	1ST DIST	FORFAR COURT [1](MONTROSE WAY/CUL DE S
10/31/2024	0.36	Sweeping Program #35	1ST DIST	SCOTTISH ISLE DRIVE [1](MONTROSE WAY/CU
10/31/2024	0.28	Sweeping Program #35	1ST DIST	ROYAL MILE DRIVE [1](MONTROSE WAY/SCO
10/31/2024	0.98	Sweeping Program #35	1ST DIST	AIRDRIE AVE [1](CLYDEBANK DR/CUL DE SAC
10/31/2024	0.32	Sweeping Program #35	1ST DIST	BERWICK CT [1](MONTROSE WAY/BERWICK C
10/31/2024	0.08	Sweeping Program #35	1ST DIST	KIRKCALDY PLACE [1](MONTROSE WAY/KIRK
10/31/2024	0.14	Sweeping Program #35	1ST DIST	LOCHRANZA WAY [1](CLYDEBANK DR/AIRDRI
10/31/2024	0.92	Sweeping Program #35	1ST DIST	CLYDEBANK DRIVE [1](MONTROSE WAY/AIRI
10/31/2024	1.00	Sweeping Program #35	1ST DIST	TOLLGATE RD [1](SINGER RD/WESTOVER LN)
11/07/2024	2.66	Sweeping Program #35	1ST DIST	ABINGDON RD [1](I-95 BRIDGE/RT 40)
11/07/2024	3.24	Sweeping Program #35	1ST DIST	ABINGDON RD [1](RT 924/I-95 BRIDGE)
11/07/2024	3.58	Sweeping Program #35	1ST DIST	STOCKTON RD [1](RT 152/DEAD END)
11/07/2024	1.40	Sweeping Program #35	1ST DIST	SINGER RD [1](RT 24/BEAVER DAM)
11/07/2024	1.50	Sweeping Program #35	1ST DIST	JOPPA FARM RD (S) [1](RT 40/HAVERHILL RD)
SWEPT LEAVES				
11/18/2024	1.00	Sweeping Program #35	1ST DIST	BOX HILL SOUTH PKWY [1](RT 924/ABINGDON
SR#50401				



Public Works - Bureau of Highways

Work Order Master Report

11/18/2024	1.20	Sweeping Program #35	1ST DIST	ASHTON WAY [1](WESTOVER LA/TOLLGATE RI
11/18/2024	0.62	Sweeping Program #35	1ST DIST	WESTOVER LA [1](TOLLGATE PKWY/CUL DE S
11/18/2024	1.90	Sweeping Program #35	1ST DIST	CRISFIELD DR [1](TOLLGATE PKWY/TOLLGAT
11/18/2024	0.14	Sweeping Program #35	1ST DIST	CRISFIELD CT [1](TOLLGATE PKWY/CUL DE S.
11/18/2024	0.30	Sweeping Program #35	1ST DIST	HEBRON TERR [1](CRISFIELD DR/HEBRON TEF
11/18/2024	0.34	Sweeping Program #35	1ST DIST	FAIRHAVEN TERR [1](CRISFIELD DR/CUL DE S
11/18/2024	0.12	Sweeping Program #35	1ST DIST	DENTON CT [1](DENTON WAY/CUL DE SAC)
11/18/2024	0.12	Sweeping Program #35	1ST DIST	JASON CT [1](DENTON WAY/CUL DE SAC)
11/18/2024	0.46	Sweeping Program #35	1ST DIST	DENTON WAY [1](CRISFIELD DR/CRISFIELD DI
11/18/2024	0.26	Sweeping Program #35	1ST DIST	GOODWILL CT [1](CRISFIELD DR/CUL DE SAC)
11/18/2024	0.22	Sweeping Program #35	1ST DIST	EASTON CT [1](CRISFIELD DR/CUL DE SAC)
11/18/2024	0.12	Sweeping Program #35	1ST DIST	INWOOD CT [1](CRISFIELD DR/CUL DE SAC)
11/19/2024	0.18	Sweeping Program #35	1ST DIST	EMILY CT (E) [1](FEDERAL LA/CUL DE SAC)
11/19/2024	1.30	Sweeping Program #35	1ST DIST	FEDERAL LN [1](ABINGDON RD/VALLEY FORC
11/19/2024	0.16	Sweeping Program #35	1ST DIST	MCCOMAS WAY (E) [1](FEDERAL LA/CUL DE S
11/19/2024	0.14	Sweeping Program #35	1ST DIST	MCCOMAS WAY (W) [1](FEDERAL LA/CUL DE S
11/19/2024	0.14	Sweeping Program #35	1ST DIST	EMILY CT (W) [1](FEDERAL LA/CUL DE SAC)
11/19/2024	0.12	Sweeping Program #35	1ST DIST	TIMBERS CT [1](CRYSTAL RIDGE CT/CUL DE S
11/19/2024	0.18	Sweeping Program #35	1ST DIST	DEER CHASE CT [1](CRYSTAL RIDGE CT/CUL I
11/19/2024	0.36	Sweeping Program #35	1ST DIST	CRYSTAL RIDGE CT [1](RT 7/CUL DE SAC)
11/19/2024	0.28	Sweeping Program #35	1ST DIST	FEDERAL LN [1](VALLEY FORGE WAY/CUL DE
11/19/2024	0.16	Sweeping Program #35	1ST DIST	FEDERAL GARTH [1](VALLEY FORGE WAY/CUI
11/19/2024	1.06	Sweeping Program #35	1ST DIST	VALLEY FORGE WAY [1](RT 7/T TURN AROUNI
11/19/2024	0.14	Sweeping Program #35	1ST DIST	ACADEMY GARTH [1](FEDERAL LA/CUL DE SA
11/19/2024	0.50	Sweeping Program #35	1ST DIST	MY LADYS DR [1](RT 7/VALLEY FORGE WAY)
12/02/2024	0.46	Sweeping Program #35	1ST DIST	FIELDCREST WAY [1](PEVERLY RUN RD/HOLL
12/02/2024	0.64	Sweeping Program #35	1ST DIST	EASTBEND CT [1](PEVERLY RUN RD/EASTBEN
12/02/2024	0.12	Sweeping Program #35	1ST DIST	MARSH CT [1](PEVERLY RUN RD/CUL DE SAC)
12/02/2024	0.22	Sweeping Program #35	1ST DIST	JOURDAN CT [1](FIELDCREST WAY/CUL DE SA
12/02/2024	0.82	Sweeping Program #35	1ST DIST	BIRCH BROOK LA [1](PEVERLY RUN RD/CUL D
12/02/2024	0.98	Sweeping Program #35	1ST DIST	PEVERLY RUN RD [1](ABINGDON RD/POUSKA
12/02/2024	1.00	Sweeping Program #35	1ST DIST	HOLLY KNOLL CT [1](LAUREL BUSH RD/CUL I
12/02/2024	0.80	Sweeping Program #35	1ST DIST	SMITH LANDING COURT [1](SEWELL ROAD/CI
12/02/2024	0.66	Sweeping Program #35	1ST DIST	TIMOTHY DR [1](BUSH RD/CUL DE SAC)
12/02/2024	0.08	Sweeping Program #35	1ST DIST	VERNON CT [1](TIMOTHY DR/CUL DE SAC)
12/02/2024	0.60	Sweeping Program #35	1ST DIST	SHARILYNN DR [1](TIMOTHY DR/CUL DE SAC)
12/02/2024	0.16	Sweeping Program #35	1ST DIST	CROSS LA [1](TIMOTHY DR/SHARILYNN DR)
12/02/2024	0.38	Sweeping Program #35	1ST DIST	COKESBURY RD [1](RT 7/ABINGDON RD)
12/02/2024	0.62	Sweeping Program #35	1ST DIST	HENRY HARFORD DR [1](ABINGDON RD/CUL I
12/02/2024	0.16	Sweeping Program #35	1ST DIST	SKILLMAN CT [1](HENRY HARFORD DR/CUL D
12/02/2024	0.28	Sweeping Program #35	1ST DIST	BANKERT TERRACE [1](HENRY HARFORD DR/(
12/02/2024	0.16	Sweeping Program #35	1ST DIST	HILSCHER CT [1](HENRY HARFORD DR/CUL D
12/02/2024	1.00	Sweeping Program #35	1ST DIST	SEWELL RD [1](ABINGDON RD/DEAD END)
12/05/2024	0.22	Sweeping Program #35	1ST DIST	DANBURY SQ [1](BRISTOL FOREST DR/DANBU
12/05/2024	0.20	Sweeping Program #35	1ST DIST	TOLCHESTER CT [1](BRISTOL FOREST DR/DEA
12/05/2024	0.50	Sweeping Program #35	1ST DIST	BRISTOL FOREST DR [1](MD RT 7/MD RT 7)
12/05/2024	0.02	Sweeping Program #35	1ST DIST	GREENWICH CT (CNR) [1](BRISTOL FOREST D

12/05/2024	0.26	Sweeping Program #35	1ST DIST	GREENWICH CT [1](GREENWICH CT (CNR)/CD
12/05/2024	0.22	Sweeping Program #35	1ST DIST	ANTRIM CT [1](ASHFORD DR/CUL DE SAC)
12/05/2024	1.18	Sweeping Program #35	1ST DIST	TRALEE CIR [1](ASHFORD DR/ASHFORD DR)
12/05/2024	0.08	Sweeping Program #35	1ST DIST	KILDARE CT [1](TRALEE CIR/CUL DE SAC)
12/05/2024	0.26	Sweeping Program #35	1ST DIST	ASHFORD DR [1](RT 7/TRALEE CIR)
12/05/2024	0.50	Sweeping Program #35	1ST DIST	KERRY CT [1](TRALEE CIR/KERRY CT)
12/05/2024	5.42	Sweeping Program #35	1ST DIST	CHELSEA RD [1](MICHAELSVILLE RD/SOD RU
12/05/2024	4.22	Sweeping Program #35	1ST DIST	WOODLEY RD [1](MICHAELSVILLE RD (E)/T T
12/06/2024	3.19	Sweeping Program #35	1ST DIST	CHURCH CREEK RD [1](RIVERSIDE PKWY/RIV
12/06/2024	1.76	Sweeping Program #35	1ST DIST	GREY'S RUN CIR [1](CHURCH CREEK RD/CHU
12/06/2024	1.08	Sweeping Program #35	1ST DIST	DECLARATION CIR [1](CHURCH CREEK RD/CH
12/06/2024	0.50	Sweeping Program #35	1ST DIST	HAMPTON HALL CT [1](GREY'S RUN CIR/HAM
12/06/2024	0.44	Sweeping Program #35	1ST DIST	WINNER'S CI [1](GREYS RUN CI/GREYS RUN C
12/06/2024	0.56	Sweeping Program #35	1ST DIST	COURTNEY LA [1](CHURCH CREEK RD/CUL DI
12/06/2024	1.10	Sweeping Program #35	1ST DIST	BANEBERRY DR [1](CHURCH CREEK RD/RT 7)
12/09/2024	4.88	Sweeping Program #35	1ST DIST	ROBIN HOOD RD [1](CHAPEL RD/RT 40)
12/09/2024	1.58	Sweeping Program #35	1ST DIST	SHERWOOD LA [1](ROBIN HOOD RD/CUL DE S
12/09/2024	1.16	Sweeping Program #35	1ST DIST	TITAN TERRACE [1](ROBIN HOOD RD/END OF
12/09/2024	3.02	Sweeping Program #35	1ST DIST	COUNTRY CLUB RD [1](OAKINGTON RD/T TUI
12/09/2024	0.58	Sweeping Program #35	1ST DIST	APOLLO TERRACE [1](TITAN TERR/TELSTAR W
12/09/2024	0.48	Sweeping Program #35	1ST DIST	NOVA DR [1](TITAN TERR/APOLLO TERR)
12/09/2024	0.10	Sweeping Program #35	1ST DIST	MERCURY CT [1](NOVA DR/CUL DE SAC)
12/09/2024	0.58	Sweeping Program #35	1ST DIST	TELESTAR WAY [1](TITAN TERR/DEAD END)
12/12/2024	0.14	Sweeping Program #35	1ST DIST	BLUE SILVER RD [1](KENSINGTON PKWY/ABI
12/12/2024	1.64	Sweeping Program #35	1ST DIST	BOX HILL SOUTH PKWY [1](RT 924/ABINGDON
12/12/2024	0.24	Sweeping Program #35	1ST DIST	BROOKS AVE [1](PORTER DR/DEAD END)
12/12/2024	3.00	Sweeping Program #35	1ST DIST	ABINGDON RD [1](RT 924/I-95 BRIDGE)
12/12/2024	3.00	Sweeping Program #35	1ST DIST	LAUREL BUSH RD [1](ABINGDON RD/WHEEL I
12/12/2024	0.18	Sweeping Program #35	1ST DIST	WALTER WARD BLVD [1](BOX HILL CORP CTR
12/12/2024	0.50	Sweeping Program #35	1ST DIST	WOODSDALE RD [1](RT 924/CUL DE SAC)
12/13/2024	0.14	Sweeping Program #35	1ST DIST	BARTON CT [1](TRELLIS LA/CUL DE SAC)
12/13/2024	0.32	Sweeping Program #35	1ST DIST	BERLIN CT (N) [1](LANHAM DR/CUL DE SAC)
12/13/2024	0.08	Sweeping Program #35	1ST DIST	AVONDALE CT [1](TRELLIS LA/CUL DE SAC)
12/13/2024	0.70	Sweeping Program #35	1ST DIST	CASCADE DR [1](TRELLIS LN/TRELLIS LN)
12/13/2024	0.20	Sweeping Program #35	1ST DIST	GAITNER PL [1](TRELLIS LA/CUL DE SAC)
12/13/2024	0.32	Sweeping Program #35	1ST DIST	LANHAM DR [1](CASCADE DR/BERLIN CT)
12/13/2024	0.12	Sweeping Program #35	1ST DIST	SCOTCH CT [1](SINGER RD/CUL DE SAC)
12/13/2024	1.00	Sweeping Program #35	1ST DIST	SINGER RD (E) [1](RT 924/RT 24)
12/13/2024	0.18	Sweeping Program #35	1ST DIST	SUITLAND PL [1](TRELLIS LA/CUL DE SAC)
12/13/2024	0.06	Sweeping Program #35	1ST DIST	TRELLIS CT [1](TRELLIS LA/CUL DE SAC)
12/13/2024	1.80	Sweeping Program #35	1ST DIST	TRELLIS LA [1](RT 924/SINGER RD)
12/13/2024	0.90	Sweeping Program #35	1ST DIST	ST CLAIR DR [1](RT 924/SINGER RD)
12/13/2024	0.46	Sweeping Program #35	1ST DIST	BENEFIT CT [1](ST CLAIR DR/CUL DE SAC)
12/13/2024	0.12	Sweeping Program #35	1ST DIST	EDEN CT [1](ST AGNES DR/T TURN AROUND)
12/13/2024	0.24	Sweeping Program #35	1ST DIST	EDEN DR [1](ST CLAIR DR/ST AGNES DR)
12/17/2024	0.18	Sweeping Program #35	1ST DIST	EDEN CT [1](ST AGNES DR/T TURN AROUND)
12/17/2024	0.75	Sweeping Program #35	1ST DIST	EDEN DR [1](ST CLAIR DR/ST AGNES DR)



Public Works - Bureau of Highways

Work Order Master Report

12/17/2024	0.60	Sweeping Program #35	1ST DIST	HAYNES CT [1](SINGER WOODS DR/CUL DE SA
12/17/2024	0.30	Sweeping Program #35	1ST DIST	HOLLY WREATH CT [1](RT 924/CUL DE SAC)
12/17/2024	0.50	Sweeping Program #35	1ST DIST	HADDAWAY CT [1](MILLER STONE CT/CUL DE
12/17/2024	1.20	Sweeping Program #35	1ST DIST	ST CLAIR DR [1](RT 924/SINGER RD)
12/17/2024	0.70	Sweeping Program #35	1ST DIST	SILVER SPRUCE LA [1](SINGER RD/VALIANT D
12/17/2024	0.75	Sweeping Program #35	1ST DIST	SINGER WOODS DR [1](SINGER DR/HOLLY WR
12/17/2024	0.43	Sweeping Program #35	1ST DIST	MILLER STONE CT [1](SINGER WOODS DR/CU
12/17/2024	1.30	Sweeping Program #35	1ST DIST	LAUREL WOODS DR [1](SINGER WOODS DR/C
12/17/2024	0.75	Sweeping Program #35	1ST DIST	PRESTON LA [1](RT 924/SINGER RD)
12/17/2024	0.75	Sweeping Program #35	1ST DIST	VALIANT DR [1](RT 924/PRESTON LA)
12/17/2024	0.50	Sweeping Program #35	1ST DIST	BATA BLVD [1](ROUTE 40/CUL DE SAC)
12/17/2024	0.28	Sweeping Program #35	1ST DIST	CHURCH POINT CT [1](POPLAR GROVE AVE/C
12/17/2024	0.32	Sweeping Program #35	1ST DIST	HOLLY AVENUE [1](PINE AVENUE/MITCHELL I
12/17/2024	0.32	Sweeping Program #35	1ST DIST	PINE AVENUE [1](POPLAR GROVE AVE/OAKDA
12/17/2024	0.54	Sweeping Program #35	1ST DIST	PERRYWOOD DR [1](SPESUTIA RD/END MAIN
12/17/2024	0.78	Sweeping Program #35	1ST DIST	POPLAR GROVE AVE [1](PARK BEACH DR/PINI
12/17/2024	1.54	Sweeping Program #35	1ST DIST	SPESUTIA RD [1](RT 40/RT 159)
12/17/2024	0.18	Sweeping Program #35	1ST DIST	TEAKE LA [1](PERRYWOOD DR/WILLSHIRE DI
12/17/2024	0.42	Sweeping Program #35	1ST DIST	WILLSHIRE DR [1](SPESUTIA RD/END MAINT)
12/18/2024	3.02	Sweeping Program #35	1ST DIST	COUNTRY CLUB RD [1](OAKINGTON RD/T TU
12/18/2024	5.42	Sweeping Program #35	1ST DIST	CHELSEA RD [1](MICHAELSVILLE RD/SOD RU
12/18/2024	0.40	Sweeping Program #35	1ST DIST	GABLER'S SHORE COURT(MARINA AVENUE/CU
12/18/2024	0.40	Sweeping Program #35	1ST DIST	MAPLE AVE [1](MICHAELSVILLE RD (W)/DEAI
12/18/2024	0.40	Sweeping Program #35	1ST DIST	MARINA AVENUE(RT. 159/BACK TO RT. 159 (CI
12/18/2024	0.40	Sweeping Program #35	1ST DIST	RAILROAD AVE [1](MICHAELSVILLE RD (W)/T
12/18/2024	0.68	Sweeping Program #35	1ST DIST	MICHAELSVILLE RD (E) [1](WOODLEY RD/T T
12/18/2024	0.22	Sweeping Program #35	1ST DIST	SEAGULL DR [1](RT 159/HERON ST)
12/18/2024	0.46	Sweeping Program #35	1ST DIST	WOODLEY RD [1](CHELSEA RD/MICHAELSVIL
12/18/2024	7.70	Sweeping Program #35	1ST DIST	CARSINS RUN RD [3](RT 156/RT 22)
12/18/2024	0.46	Sweeping Program #35	1ST DIST	CARSINWOOD DR [1](STEPNEY RD/DEAD END
12/18/2024	0.24	Sweeping Program #35	1ST DIST	CARSINWOOD CT [1](CARSIN WOOD DR/CDS
12/18/2024	0.32	Sweeping Program #35	1ST DIST	CARVALE DR [1](CARSINS RUN RD/DEAD END
12/18/2024	2.12	Sweeping Program #35	1ST DIST	CRESWELL RD (E) [1](RT 7/T TURN AROUND)
12/18/2024	0.46	Sweeping Program #35	1ST DIST	BELCAMP RD (N) [1](CRESWELL RD/CUL DE SA
12/18/2024	0.42	Sweeping Program #35	1ST DIST	FORESTSIDE DR [1](NOVA SCOTIA RD/DEAD E
12/18/2024	0.20	Sweeping Program #35	1ST DIST	PEBBLE DR [1](FORESTSIDE DR/DEAD END)
12/18/2024	0.15	Sweeping Program #35	1ST DIST	RONSON CT [1](CARVALE DR/CUL DE SAC)
12/19/2024	0.16	Sweeping Program #35	1ST DIST	BERRYCREST WAY [1](BURNT HILL TRAIL/COI
12/19/2024	0.54	Sweeping Program #35	1ST DIST	ATLAS CEDAR WAY [1](BURNT HILL TRAIL/BU
12/19/2024	0.60	Sweeping Program #35	1ST DIST	BURNT HILL TRAIL [1](RT 7/HOLLY OAK CI)
12/19/2024	0.36	Sweeping Program #35	1ST DIST	CORALBERRY COURT [1](BURNT HILL TRAIL/C
12/19/2024	0.84	Sweeping Program #35	1ST DIST	ENGLISH IVY CT [1](THISTLE HILL DR RAB/DI
12/19/2024	0.20	Sweeping Program #35	1ST DIST	HAZY DAWN DR [1](ATLAS CEDAR WAY/ATLA
12/19/2024	0.10	Sweeping Program #35	1ST DIST	COOL BREEZE CIRCLE [1](BURNT HILL TRAIL
12/19/2024	0.18	Sweeping Program #35	1ST DIST	LIMESTONE CT [1](BURNT HILL TRAIL/BURNT
12/19/2024	0.30	Sweeping Program #35	1ST DIST	POSSUM TROT WAY [1](THISTLE HILL DR/WIT
12/19/2024	0.52	Sweeping Program #35	1ST DIST	SEVEN TRAILS CIRCLE [1](SEVEN TRAILS DRI

12/19/2024	0.54	Sweeping Program #35	1ST DIST	SEVEN TRAILS DRIVE [1](RT 7/CUL DE SAC)
12/19/2024	0.18	Sweeping Program #35	1ST DIST	SNOWBERRY WAY [1](ATLAS CEDAR WAY/ATL
12/19/2024	0.38	Sweeping Program #35	1ST DIST	THISTLE HILL DR [1](BURNT HILL TRAILS/WIT
12/19/2024	0.18	Sweeping Program #35	1ST DIST	TRAILS END ROAD [1](SEVEN TRAILS CIRCLE
12/19/2024	0.26	Sweeping Program #35	1ST DIST	TWINLEAF DRIVE [1](TRAILS END ROAD/BUR
12/19/2024	0.14	Sweeping Program #35	1ST DIST	WINELEAF LN [1](ENGLISH IVY WAY/THISTLE
12/19/2024	0.40	Sweeping Program #35	1ST DIST	WITCHHAZEL WAY [1](BURNT HILL TRAIL/TH
12/20/2024	0.20	Sweeping Program #35	1ST DIST	AMEDORO COURT [1](ROUTE 7/CUL DE SAC)
12/20/2024	0.28	Sweeping Program #35	1ST DIST	BARBARA CT [2](FOREST VALLEY DR/CUL DE S
12/20/2024	0.12	Sweeping Program #35	1ST DIST	BLEVINS RD [1](EDGEWOOD RD/T TURN AROU
12/20/2024	0.84	Sweeping Program #35	1ST DIST	CONTINENTAL DR [1](GOVERNOR'S CT/RT 7)
12/20/2024	0.60	Sweeping Program #35	1ST DIST	ELDERBERRY DR [1](EDGEWOOD RD/CUL-DE-
12/20/2024	3.14	Sweeping Program #35	1ST DIST	EDGEWOOD RD [1](RT 40/VAN BIBBER RD (N))
12/20/2024	0.52	Sweeping Program #35	1ST DIST	GOVERNOR'S CT [1](RT 7/CUL DE SAC)
12/20/2024	0.12	Sweeping Program #35	1ST DIST	HALL ST [1](ELDERBERRY DR/BLEVINS RD)
12/20/2024	0.20	Sweeping Program #35	1ST DIST	FOUR SEASONS DRIVE(ROUTE 7/ROUND ABOU
12/20/2024	0.26	Sweeping Program #35	1ST DIST	INDIANSUMMER COURT(ROUND ABOUT/CUL I
12/20/2024	0.32	Sweeping Program #35	1ST DIST	PUMPKIN PATCH CT [1](RAKING LEAF DR/CDS
12/20/2024	0.84	Sweeping Program #35	1ST DIST	RAKING LEAF DRIVE [1](ROUND ABOUT/ROUN
12/20/2024	0.26	Sweeping Program #35	1ST DIST	ROSARY COURT [1](AMEDORO COURT/CUL DE
12/20/2024	2.00	Sweeping Program #35	1ST DIST	VAN BIBBER RD (N) [1](EDGEWOOD RD/WALT
12/26/2024	2.40	Sweeping Program #35	1ST DIST	TOLLGATE PKWY [1](CONSTANT FRIENDSHIP
12/26/2024	0.25	Sweeping Program #35	1ST DIST	IRON OAK COURT(DOWERS ROAD/CUL DE SAC
12/26/2024	0.75	Sweeping Program #35	1ST DIST	DOWERS ROAD(LAUREL BUSH/CUL DE SAC)
12/26/2024	0.50	Sweeping Program #35	1ST DIST	SPRUCE PINE ROAD(LAUREL BUSH/UNKNOWN
12/26/2024	0.50	Sweeping Program #35	1ST DIST	OATGRASS COURT(SPRUCE PINE ROAD/CUL D
12/26/2024	0.50	Sweeping Program #35	1ST DIST	MOORGRASS COURT(SPRUCE PINE ROAD/CUL
12/26/2024	0.50	Sweeping Program #35	1ST DIST	SUGAR PINE COURT(DOWERS ROAD/CUL DE S
12/26/2024	0.50	Sweeping Program #35	1ST DIST	LIVE OAK COURT(DOWERS ROAD/CUL DE SAC
12/26/2024	1.25	Sweeping Program #35	1ST DIST	BURGH WESTRA WAY [1](LAUREL BUSH RD/B
12/26/2024	0.50	Sweeping Program #35	1ST DIST	TODDSBURY COURT [1](BURGH-WESTRA WAY
12/26/2024	0.50	Sweeping Program #35	1ST DIST	SULLIVAN DR [1](MILLWRIGHT CI/LAUREL BU
12/26/2024	0.50	Sweeping Program #35	1ST DIST	MILLWRIGHT CI [1](LAUREL BUSH RD/SULLIV
03/06/2025	0.75	Sweeping Program #35	1ST DIST	ABINGDON RD [1](RT 924/I-95 BRIDGE)
03/06/2025	0.75	Sweeping Program #35	1ST DIST	CLAYTON RD [1](RT 7/STOCKTON RD)
03/06/2025	1.50	Sweeping Program #35	1ST DIST	SINGER RD (W) [1](BEAVER DAM DR/RT 152)
03/06/2025	0.50	Sweeping Program #35	1ST DIST	STOCKTON RD [1](RT 152/DEAD END)
03/11/2025	0.24	Sweeping Program #35	1ST DIST	WINEBERRY WAY [1](THISTLE HILL DR/POSSU
03/11/2025	0.36	Sweeping Program #35	1ST DIST	CORALBERRY COURT [1](BURNT HILL TRAIL/C
03/11/2025	0.80	Sweeping Program #35	1ST DIST	BRISTLE CONE CI [1](HOLLY OAK CIRCLE/HOL
03/11/2025	1.38	Sweeping Program #35	1ST DIST	BURNT HILL TRAIL [1](RT 7/HOLLY OAK CI)
03/11/2025	0.06	Sweeping Program #35	1ST DIST	BRISTLE CONE CT [1](HOLLY OAK CIRCLE/T T
03/11/2025	0.10	Sweeping Program #35	1ST DIST	PAPER BARK RD [1](HOLLY OAK CIRCLE/BRIS
03/11/2025	0.44	Sweeping Program #35	1ST DIST	WITCHHAZEL WAY [1](BURNT HILL TRAIL/TH
03/11/2025	0.04	Sweeping Program #35	1ST DIST	ENGLISH IVY CT [1](THISTLE HILL DR RAB/DE
03/11/2025	0.18	Sweeping Program #35	1ST DIST	LIMESTONE CT [1](BURNT HILL TRAIL/BURNT
03/11/2025	0.24	Sweeping Program #35	1ST DIST	TWINLEAF DRIVE [1](TRAILS END ROAD/BUR



Public Works - Bureau of Highways

Work Order Master Report

03/11/2025	0.54	Sweeping Program #35	1ST DIST	ATLAS CEDAR WAY [1](BURNT HILL TRAIL/BU
03/11/2025	0.30	Sweeping Program #35	1ST DIST	POSSUM TROT WAY [1](THISTLE HILL DR/WIT
03/11/2025	0.20	Sweeping Program #35	1ST DIST	HAZY DAWN DR [1](ATLAS CEDAR WAY/ATLA
03/11/2025	0.18	Sweeping Program #35	1ST DIST	SNOWBERRY WAY [1](ATLAS CEDAR WAY/ATL
03/11/2025	0.08	Sweeping Program #35	1ST DIST	COOL BREEZE CIRCLE [1](BURNT HILL TRAIL
03/11/2025	0.14	Sweeping Program #35	1ST DIST	BERRYCREST WAY [1](BURNT HILL TRAIL/COF
03/11/2025	1.54	Sweeping Program #35	1ST DIST	HOLLY OAK CIRCLE [1](RT 7/END OF MAINT)
03/11/2025	0.38	Sweeping Program #35	1ST DIST	THISTLE HILL DR [1](BURNT HILL TRAILS/WIT
03/11/2025	0.16	Sweeping Program #35	1ST DIST	TRAILS END ROAD [1](SEVEN TRAILS CIRCLE
03/11/2025	0.04	Sweeping Program #35	1ST DIST	WINELEAF LN [1](ENGLISH IVY WAY/THISTLE
03/11/2025	0.50	Sweeping Program #35	1ST DIST	SEVEN TRAILS CIRCLE [1](SEVEN TRAILS DRI
03/11/2025	0.40	Sweeping Program #35	1ST DIST	SEVEN TRAILS DRIVE [1](RT 7/CUL DE SAC)
03/11/2025	0.14	Sweeping Program #35	1ST DIST	BLUE SILVER RD [1](KENSINGTON PKWY/ABIN
03/11/2025	0.08	Sweeping Program #35	1ST DIST	BOX HILL CT [1](KENSINGTON PKWY/CUL DE
03/11/2025	0.46	Sweeping Program #35	1ST DIST	BOXRIDGE DR [1](RT 924/LAURENTUM PKWY)
03/11/2025	0.08	Sweeping Program #35	1ST DIST	BURNLEY CT [1](KENSINGTON PKWY/CUL DE
03/11/2025	0.06	Sweeping Program #35	1ST DIST	BURNT OAK CT [1](KENSINGTON PKWY/CUL I
03/11/2025	0.46	Sweeping Program #35	1ST DIST	BRIGHTWATER LA [1](KENSINGTON PKWY/SA
03/11/2025	0.86	Sweeping Program #35	1ST DIST	BOXTHORN RD [1](LAURENTUM PKWY/LAURI
03/11/2025	0.14	Sweeping Program #35	1ST DIST	BLUEBELL CT [1](BOXTHORN RD/CUL DE SAC
03/11/2025	0.16	Sweeping Program #35	1ST DIST	BYRON CT [1](LAURENTIUM PKWY/CUL DE SA
03/11/2025	0.20	Sweeping Program #35	1ST DIST	ALDER CT [1](LAURENTUM PKWY/CUL DE SA
03/11/2025	0.16	Sweeping Program #35	1ST DIST	AUDEN CT [1](LAURENTUM LA/CUL DE SAC)
03/11/2025	0.16	Sweeping Program #35	1ST DIST	COLCHESTER CT [1](KENSINGTON PKWY/CUI
03/11/2025	0.60	Sweeping Program #35	1ST DIST	CRAIGSTON LA [1](KENSINGTON PKWY/KENS
03/11/2025	0.18	Sweeping Program #35	1ST DIST	ALCONBURY CT [1](KENSINGTON PKWY/CUL
03/11/2025	0.12	Sweeping Program #35	1ST DIST	DAINAWAY CT [1](LAURENTUM PKWY/CUL DI
03/11/2025	0.12	Sweeping Program #35	1ST DIST	HASTINGS CT [1](DUMBARTON DR/CUL DE SA
03/11/2025	0.06	Sweeping Program #35	1ST DIST	FIRELIGHT CT [1](HARROGATE WAY/DEAD EN
03/11/2025	0.06	Sweeping Program #35	1ST DIST	FAIR ROSE CT [1](BOXTHORN RD/CUL DE SAC
03/11/2025	0.08	Sweeping Program #35	1ST DIST	FALKLAND RD [1](KENSINGTON PKWY/LAUR
03/11/2025	0.14	Sweeping Program #35	1ST DIST	GREENNOCK CT [1](HARROGATE WAY/CUL DI
03/11/2025	0.16	Sweeping Program #35	1ST DIST	GATESHEAD CT [1](KENSINGTON PKWY/CUL
03/11/2025	0.60	Sweeping Program #35	1ST DIST	HARROGATE WAY [1](KENSINGTON PKWY/DU
03/11/2025	0.16	Sweeping Program #35	1ST DIST	HADDINGTON CT [1](KENSINGTON PKWY/CU
03/11/2025	1.00	Sweeping Program #35	1ST DIST	HUXLEY CIR [1](LAURENTUM LA/BOXRIDGE
03/11/2025	2.12	Sweeping Program #35	1ST DIST	KENSINGTON PKWY [1](FALKAND RD/BOXRII
03/11/2025	0.12	Sweeping Program #35	1ST DIST	KIRKWALL CT [1](KENSINGTON PKWY/CUL D
03/11/2025	0.14	Sweeping Program #35	1ST DIST	KINGS MARK CT [1](KENSINGTON PKWY/CUL
03/11/2025	1.32	Sweeping Program #35	1ST DIST	LAURENTUM PKWY [1](BOXRIDGE DR/FALKL
03/12/2025	1.00	Sweeping Program #35	1ST DIST	SNAPDRAGON COURT(LAUREL BUSH/CUL DE
03/12/2025	0.94	Sweeping Program #35	1ST DIST	LONG MEADOW DR [1](ST MARY'S CHURCH R
03/12/2025	0.10	Sweeping Program #35	1ST DIST	LOVE GROVE CT [1](MERRICK WAY/CUL DE S
03/12/2025	1.10	Sweeping Program #35	1ST DIST	LAUREL VALLEY GARTH [1](PARALLEL PATH/I
03/12/2025	0.90	Sweeping Program #35	1ST DIST	MERRICK WAY [1](HOLLY WREATH RD/CUL DI
03/12/2025	0.12	Sweeping Program #35	1ST DIST	WHISPERWOOD CT [1](LONG MEADOW DR/CU
03/12/2025	0.10	Sweeping Program #35	1ST DIST	YARDLEY CT [1](PARALLEL PATH/CUL DE SAC



Public Works - Bureau of Highways

Work Order Master Report

03/12/2025	0.12	Sweeping Program #35	1ST DIST	YELLOW BRICK CT [1](LAUREL VALLEY GARI
03/12/2025	0.36	Sweeping Program #35	1ST DIST	EDITH STONE DR [1](MERRICK WAY/LONG ME
03/12/2025	0.32	Sweeping Program #35	1ST DIST	CINNAMON TREE DR [1](MERRICK WAY/LONC
03/12/2025	1.02	Sweeping Program #35	1ST DIST	PARALLEL PATH [1](LAUREL VALLEY GARTH/L
03/12/2025	0.40	Sweeping Program #35	1ST DIST	HOLLY WREATH DR [1](RT 924/LONG MEADOV
03/12/2025	0.12	Sweeping Program #35	1ST DIST	GRAND OAKS CIRCLE [1](GRAND OAKS CT/GI
03/12/2025	0.36	Sweeping Program #35	1ST DIST	GRAND OAKS COURT [1](ST. MARYS CHURCH
03/12/2025	0.12	Sweeping Program #35	1ST DIST	ANDROMEDA CT (N & S) [1](RHODODENDRON
03/12/2025	0.98	Sweeping Program #35	1ST DIST	ABBEY CIRCLE [1](REGAL DRIVE/REGAL DRIV
03/12/2025	1.04	Sweeping Program #35	1ST DIST	AMY DR [1](REGAL DR/PARLIAMENT DR)
03/12/2025	0.68	Sweeping Program #35	1ST DIST	BIGMOUNT CT [1](LAUREL BUSH RD/CUL DE S
03/12/2025	0.36	Sweeping Program #35	1ST DIST	BOEING CT [1](SMALLWOOD DR/CUL DE SAC)
03/12/2025	0.14	Sweeping Program #35	1ST DIST	BUCKINGHAM CT [1](REGAL DR/CUL DE SAC)
03/12/2025	0.16	Sweeping Program #35	1ST DIST	BUTTERFIELD DR [1](REGAL DR/CDS TO TTA)
03/12/2025	0.10	Sweeping Program #35	1ST DIST	BREWSTER DR [1](PARLIAMENT DR/T TURN AI
03/12/2025	0.60	Sweeping Program #35	1ST DIST	BURGH WESTRA WAY [1](LAUREL BUSH RD/B
03/12/2025	0.22	Sweeping Program #35	1ST DIST	CHERRY LAUREL CT [1](BIG MOUNT CT/CUL D
03/12/2025	0.40	Sweeping Program #35	1ST DIST	COLPEPPER RD [1](BOEING CT/SMALLWOOD I
03/12/2025	0.18	Sweeping Program #35	1ST DIST	CLYDE CT [1](AMY DR/CUL DE SAC)
03/12/2025	0.06	Sweeping Program #35	1ST DIST	DOWERS ROAD(LAUREL BUSH/CUL DE SAC)
03/12/2025	0.18	Sweeping Program #35	1ST DIST	IRON GATE ROAD [2](TOLLGATE RD S/LOOP)
03/12/2025	0.18	Sweeping Program #35	1ST DIST	LIVE OAK COURT(DOWERS ROAD/CUL DE SAC
03/12/2025	0.18	Sweeping Program #35	1ST DIST	LINDSAY CT [1](SMALLWOOD DR/CUL DE SAC
03/12/2025	0.42	Sweeping Program #35	1ST DIST	MILLWRIGHT CI [1](LAUREL BUSH RD/SULLIV
03/12/2025	0.18	Sweeping Program #35	1ST DIST	OATGRASS COURT(SPRUCE PINE ROAD/CUL D
03/12/2025	0.18	Sweeping Program #35	1ST DIST	OVERVIEW DR [1](LAUREL BUSH RD/COLPEPI
03/12/2025	0.18	Sweeping Program #35	1ST DIST	MOORGRASS COURT(SPRUCE PINE ROAD/CUL
03/12/2025	1.14	Sweeping Program #35	1ST DIST	REGAL DR [1](LAUREL BUSH RD/PARLIAMENT
03/12/2025	0.18	Sweeping Program #35	1ST DIST	RHODODENDRON DR (E) [1](BIG MOUNT CT/L
03/12/2025	0.72	Sweeping Program #35	1ST DIST	SMALLWOOD DR [1](BIGMOUNT CT/CDS TO C
03/12/2025	0.18	Sweeping Program #35	1ST DIST	SPRUCE PINE ROAD(LAUREL BUSH/UNKNOWN
03/12/2025	0.18	Sweeping Program #35	1ST DIST	RHODODENDRON DR (W) [1](BIG MOUNT CT/A
03/12/2025	0.12	Sweeping Program #35	1ST DIST	SUGAR PINE COURT(DOWERS ROAD/CUL DE S
03/12/2025	0.20	Sweeping Program #35	1ST DIST	SULLIVAN DR [1](MILLWRIGHT CI/LAUREL BU
03/12/2025	0.25	Sweeping Program #35	1ST DIST	TODDSBURY COURT [1](BURGH-WESTRA WAY
03/13/2025	0.20	Sweeping Program #35	1ST DIST	HEBRON TERR [1](CRISFIELD DR/HEBRON TER
03/13/2025	1.90	Sweeping Program #35	1ST DIST	CRISFIELD DR [1](TOLLGATE PKWY/TOLLGAT
03/13/2025	0.36	Sweeping Program #35	1ST DIST	NORTH BRANCH COURT [1](STONE MILL CT/C
03/13/2025	0.24	Sweeping Program #35	1ST DIST	STONE CT [1](ENFIELD RD/CUL DE SAC)
03/13/2025	0.20	Sweeping Program #35	1ST DIST	FAIRHAVEN TERR [1](CRISFIELD DR/CUL DE S
03/13/2025	0.20	Sweeping Program #35	1ST DIST	EASTON CT [1](CRISFIELD DR/CUL DE SAC)
03/13/2025	0.38	Sweeping Program #35	1ST DIST	DENTON WAY [1](CRISFIELD DR/CRISFIELD DI
03/13/2025	0.12	Sweeping Program #35	1ST DIST	DENTON CT [1](DENTON WAY/CUL DE SAC)
03/13/2025	0.26	Sweeping Program #35	1ST DIST	GOODWILL CT [1](CRISFIELD DR/CUL DE SAC
03/13/2025	0.12	Sweeping Program #35	1ST DIST	INWOOD CT [1](CRISFIELD DR/CUL DE SAC)
03/13/2025	0.60	Sweeping Program #35	1ST DIST	WESTOVER LA [1](TOLLGATE PKWY/CUL DE S
03/13/2025	1.26	Sweeping Program #35	1ST DIST	ASHTON WAY [1](WESTOVER LA/TOLLGATE RI



Public Works - Bureau of Highways

Work Order Master Report

03/13/2025	1.40	Sweeping Program #35	1ST DIST	CONSTANT FRIENDSHIP BLVD [1](TOLLGATE I
03/13/2025	1.00	Sweeping Program #35	1ST DIST	ARUNDEL CT [1](CONSTANT FRIENDSHIP/CUL
03/13/2025	0.10	Sweeping Program #35	1ST DIST	JASON CT [1](DENTON WAY/CUL DE SAC)
03/13/2025	0.60	Sweeping Program #35	1ST DIST	PARLIAMENT DR [1](AMY DR/BUTTERFIELD D
03/13/2025	0.25	Sweeping Program #35	1ST DIST	SUTTON DR [4](OLD YORK RD/HODGES RD)
03/18/2025	3.70	Sweeping Program #35	1ST DIST	HOOKERS MILL RD [1](ABINGDON RD/RT 136)
03/18/2025	0.78	Sweeping Program #35	1ST DIST	BYNUM OVERLOOK DR [1](HOOKERS MILL RI
03/18/2025	0.20	Sweeping Program #35	1ST DIST	GREEN FAWN CT [1](GREY ANTLER CT/CUL DI
03/18/2025	0.32	Sweeping Program #35	1ST DIST	DEER CT [1](BYNUM OVERLOOK DR/CUL DE S
03/18/2025	0.18	Sweeping Program #35	1ST DIST	GRAY ANTLER CT [1](BYNUM OVERLOOK DR/
03/18/2025	0.46	Sweeping Program #35	1ST DIST	CLARKSON DR [1](HOOKERS MILL RD/OAK M
03/18/2025	0.10	Sweeping Program #35	1ST DIST	BYNUM VIEW CT [1](OLD RIDGE LINE WAY/CU
03/18/2025	0.34	Sweeping Program #35	1ST DIST	OAK MILL DR [1](KNOTTY PINE DR/OLD RIDG
03/18/2025	0.08	Sweeping Program #35	1ST DIST	PINE CREEK CT [1](CLARKSON DR/CUL DE SA
03/18/2025	0.06	Sweeping Program #35	1ST DIST	FUTURE STUB RD [1](KNOTTY PINE DR/DEAD
03/18/2025	0.20	Sweeping Program #35	1ST DIST	PINE CREEK WAY [1](CLARKSON DR/OLD RID(
03/18/2025	0.72	Sweeping Program #35	1ST DIST	KNOTTY PINE DR [1](CLARKSON DR/CUL DE S
03/18/2025	0.10	Sweeping Program #35	1ST DIST	OLD RIDGE LINE WAY [1](PINE CREEK WAY/O/
03/18/2025	3.86	Sweeping Program #35	1ST DIST	LAUREL BUSH RD [1](ABINGDON RD/WHEEL I
03/19/2025	2.74	Sweeping Program #35	1ST DIST	CHURCH CREEK RD [1](RIVERSIDE PKWY/RIV
03/19/2025	1.10	Sweeping Program #35	1ST DIST	CLARKSON DR [1](HOOKERS MILL RD/CUL DE
03/19/2025	0.14	Sweeping Program #35	1ST DIST	ANDREW CT [1](TIFFANY TRAIL/CUL DE SAC)
03/19/2025	0.06	Sweeping Program #35	1ST DIST	BEASON CT [1](EASTRIDGE RD/CUL DE SAC)
03/19/2025	0.78	Sweeping Program #35	1ST DIST	BIRCH BROOK LA [1](PEVERLY RUN RD/CUL D
03/19/2025	0.42	Sweeping Program #35	1ST DIST	EASTRIDGE RD [1](CLARKSON DR/POUSKA RI
03/19/2025	0.46	Sweeping Program #35	1ST DIST	FIELDCREST WAY [1](PEVERLY RUN RD/HOLL
03/19/2025	0.16	Sweeping Program #35	1ST DIST	GITTINGS CT [1](POUSKA RD/CUL DE SAC)
03/19/2025	0.18	Sweeping Program #35	1ST DIST	GRINDLE CT [1](TOWSON DR/CUL DE SAC)
03/19/2025	0.36	Sweeping Program #35	1ST DIST	HARVEY LA [1](TOWSON DR/POUSKA RD)
03/19/2025	0.42	Sweeping Program #35	1ST DIST	HAMBURG DR [1](HARVEY LA/POUSKA RD)
03/19/2025	0.26	Sweeping Program #35	1ST DIST	HOLLY KNOLL CT [1](LAUREL BUSH RD/CUL I
03/19/2025	0.08	Sweeping Program #35	1ST DIST	JEFFREY CT [1](TIFFANY CT/CUL DE SAC)
03/19/2025	0.18	Sweeping Program #35	1ST DIST	JOURDAN CT [1](FIELDCREST WAY/CUL DE SA
03/19/2025	0.62	Sweeping Program #35	1ST DIST	EASTBEND CT [1](PEVERLY RUN RD/EASTBEN
03/19/2025	0.08	Sweeping Program #35	1ST DIST	LATROBE CT [1](EASTRIDGE RD/CUL DE SAC)
03/19/2025	1.50	Sweeping Program #35	1ST DIST	POUSKA RD [1](HOOKERS MILL RD/CUL DE SA
03/19/2025	0.08	Sweeping Program #35	1ST DIST	MARSH CT [1](PEVERLY RUN RD/CUL DE SAC)
03/19/2025	0.14	Sweeping Program #35	1ST DIST	RANDALL DR [1](POUSKA DR/T TURN AROUN
03/19/2025	0.42	Sweeping Program #35	1ST DIST	TOWSON DR [1](POUSKA RD/CUL DE SAC)
03/19/2025	0.56	Sweeping Program #35	1ST DIST	TIFFANY TRAIL [1](HOOKERS MILL RD/CUL DI
03/20/2025	0.22	Sweeping Program #35	1ST DIST	ANTRIM CT [1](ASHFORD DR/CUL DE SAC)
03/20/2025	0.26	Sweeping Program #35	1ST DIST	ASHFORD DR [1](RT 7/TRALEE CIR)
03/20/2025	0.54	Sweeping Program #35	1ST DIST	APPLIANCE DR [1](MCCORMICK DR/CUL DE SA
03/20/2025	0.54	Sweeping Program #35	1ST DIST	BELMAR DR [1](MERCEDES DR/CUL DE SAC)
03/20/2025	1.94	Sweeping Program #35	1ST DIST	BRASS MILL RD [1](RIVERSIDE PKWY/RT 7)
03/20/2025	0.54	Sweeping Program #35	1ST DIST	BRISTOL FOREST DR [1](MD RT 7/MD RT 7)
03/20/2025	0.44	Sweeping Program #35	1ST DIST	COMPASS POINT RD [1](BRASS MILL RD/MCC(

Public Works - Bureau of Highways

Work Order Master Report

03/20/2025	0.24	Sweeping Program #35	1ST DIST	DANBURY SQ [1](BRISTOL FOREST DR/DANBU
03/20/2025	0.08	Sweeping Program #35	1ST DIST	KILDARE CT [1](TRALEE CIR/CUL DE SAC)
03/20/2025	0.50	Sweeping Program #35	1ST DIST	KERRY CT [1](TRALEE CIR/KERRY CT)
03/20/2025	0.22	Sweeping Program #35	1ST DIST	GREENWICH CT [1](GREENWICH CT (CNR)/CD
03/20/2025	0.24	Sweeping Program #35	1ST DIST	MCCORMICK DRIVE [1](COMPASS POINT ROA
03/20/2025	1.14	Sweeping Program #35	1ST DIST	MERCEDES DR [1](BRASS MILL RD/DEAD END
03/20/2025	0.48	Sweeping Program #35	1ST DIST	RICHLYNN DR [1](BRASS MILL RD/BELMAR D
03/20/2025	0.24	Sweeping Program #35	1ST DIST	TOLCHESTER CT [1](BRISTOL FOREST DR/DEA
03/20/2025	1.18	Sweeping Program #35	1ST DIST	TRALEE CIR [1](ASHFORD DR/ASHFORD DR)
03/20/2025	0.46	Sweeping Program #35	1ST DIST	WHARF POINT CT [1](BRASS MILL RD/CUL DE
04/03/2025	0.54	Sweeping Program #35	1ST DIST	ATLAS CEDAR WAY [1](BURNT HILL TRAIL/BU
04/03/2025	0.16	Sweeping Program #35	1ST DIST	BERRYCREST WAY [1](BURNT HILL TRAIL/COR
04/03/2025	0.60	Sweeping Program #35	1ST DIST	BURNT HILL TRAIL [1](DELETED/DELETED)
04/03/2025	0.10	Sweeping Program #35	1ST DIST	COOL BREEZE CIRCLE [1](BURNT HILL TRAIL/
04/03/2025	0.36	Sweeping Program #35	1ST DIST	CORALBERRY COURT [1](BURNT HILL TRAIL/C
04/03/2025	0.84	Sweeping Program #35	1ST DIST	ENGLISH IVY CT [1](THISTLE HILL DR RAB/DE
04/03/2025	0.20	Sweeping Program #35	1ST DIST	HAZY DAWN DR [1](ATLAS CEDAR WAY/ATLA
04/03/2025	0.18	Sweeping Program #35	1ST DIST	LIMESTONE CT [1](BURNT HILL TRAIL/BURNT
04/03/2025	0.30	Sweeping Program #35	1ST DIST	POSSUM TROT WAY [1](THISTLE HILL DR/WIT
04/03/2025	0.38	Sweeping Program #35	1ST DIST	THISTLE HILL DR [1](BURNT HILL TRAILS/WIT
04/03/2025	0.26	Sweeping Program #35	1ST DIST	TWINLEAF DRIVE [1](TRAILS END ROAD/BUR
04/03/2025	0.18	Sweeping Program #35	1ST DIST	SNOWBERRY WAY [1](ATLAS CEDAR WAY/ATL
04/03/2025	0.26	Sweeping Program #35	1ST DIST	WINEBERRY WAY [1](THISTLE HILL DR/POSSU
04/03/2025	0.14	Sweeping Program #35	1ST DIST	WINELEAF LN [1](ENGLISH IVY WAY/THISTLE
04/03/2025	0.40	Sweeping Program #35	1ST DIST	WITCHHAZEL WAY [1](BURNT HILL TRAIL/TH
04/03/2025	0.57	Sweeping Program #35	1ST DIST	TRAILS END ROAD [1](SEVEN TRAILS CIRCLE
04/14/2025	1.30	Sweeping Program #35	1ST DIST	ATKISSON RD [1](STOCKTON RD/SINGER RD)
04/14/2025	3.50	Sweeping Program #35	1ST DIST	CLAYTON RD [1](RT 152/RT 7)
04/14/2025	2.38	Sweeping Program #35	1ST DIST	JERUSALEM RD [1](RT 152/BALTO CO LINE)
04/14/2025	0.28	Sweeping Program #35	1ST DIST	OLD JOPPA RD (EXT) [1](RT 7/END MAINT)
04/14/2025	0.12	Sweeping Program #35	1ST DIST	LINS DR [1](JERUSALEM RD/DEAD END)
04/14/2025	0.75	Sweeping Program #35	1ST DIST	LINCREST RD [1](OLD JOPPA RD/LINS DR)
04/17/2025	1.25	Sweeping Program #35	1ST DIST	CLAYTON RD [1](RT 152/RT 7)
04/17/2025	0.30	Sweeping Program #35	1ST DIST	HILLTOP DR [1](HOLLY DR/END CO MAINT)
04/17/2025	0.32	Sweeping Program #35	1ST DIST	HOLLY DR [1](CLAYTON RD/HILLTOP DR)
04/17/2025	0.38	Sweeping Program #35	1ST DIST	LAUREL DR [1](CLAYTON RD/HILLTOP DR)
04/17/2025	0.72	Sweeping Program #35	1ST DIST	DOROTHY AVE [1](HEIM LA/SHIRLEY AVE)
04/17/2025	0.70	Sweeping Program #35	1ST DIST	HEIM LA [1](CLAYTON RD/END OF MAINT)
04/17/2025	0.54	Sweeping Program #35	1ST DIST	SHIRLEY AVE [1](CLAYTON RD/END MAINT)
04/17/2025	0.20	Sweeping Program #35	1ST DIST	EVA AVE [1](CLAYTON RD/DEAD END)
04/22/2025	0.75	Sweeping Program #35	1ST DIST	AHERN DRIVE [1](WILLOUGHBY BEACH ROAD
04/22/2025	0.34	Sweeping Program #35	1ST DIST	ANCON COURT [1](AHERN DRIVE/CUL DE SAC
04/22/2025	1.02	Sweeping Program #35	1ST DIST	ALBANTOWNE WAY [1](WILLOUGHBY BEACH
04/22/2025	0.32	Sweeping Program #35	1ST DIST	BEAVER CROSSING ROAD [1](BROADNECK CR
04/22/2025	0.12	Sweeping Program #35	1ST DIST	BAGNELL COURT [1](BROADNECK CROSSING
04/22/2025	0.10	Sweeping Program #35	1ST DIST	BOURNE WAY [1](BROADNECK CROSSING WA
04/22/2025	1.80	Sweeping Program #35	1ST DIST	BROADNECK CROSSING RD [1](WILLOUGHBY

04/22/2025	0.12	Sweeping Program #35	1ST DIST	CROWN CI [1](BROADNECK CROSSING RD/BR
04/22/2025	0.14	Sweeping Program #35	1ST DIST	CANOE LANE [1](INDIANS LAIR/CUL DE SAC)
04/22/2025	0.18	Sweeping Program #35	1ST DIST	CAPTAINS COVE COURT [1](WILLOUGHBYS W
04/22/2025	0.12	Sweeping Program #35	1ST DIST	HERITAGE THRONE WAY [1](MAIDENS LANE/(
04/22/2025	0.10	Sweeping Program #35	1ST DIST	IRIS DR [1](LABURNUM RD/WINTERBERRY DF
04/22/2025	0.14	Sweeping Program #35	1ST DIST	KEALE WAY [1](BROADNECK CROSSING RD/C
04/22/2025	0.08	Sweeping Program #35	1ST DIST	KING JAMES CI [1](BROADNECK CROSSING RI
04/22/2025	0.24	Sweeping Program #35	1ST DIST	INDIAN'S LAIR [1](BROADNECK CROSSING RD
04/22/2025	0.20	Sweeping Program #35	1ST DIST	MAJESTY LN [1](BROADNECK CROSSING RD/(
04/22/2025	0.22	Sweeping Program #35	1ST DIST	MAIDENS LANE [1](BROADNECK CROSSING R
04/22/2025	0.40	Sweeping Program #35	1ST DIST	MAHONIA WAY [1](REDBUD RD/SIWANOY DR)
04/22/2025	0.20	Sweeping Program #35	1ST DIST	LANSDOWNE CT [1](ALBANTOWNE WAY/CUL
04/22/2025	0.08	Sweeping Program #35	1ST DIST	LASONIA CT [1](ALBANTOWNE WAY/CUL DE S
04/22/2025	0.10	Sweeping Program #35	1ST DIST	LILAC CT [1](WINTERBERRY DR/CUL DE SAC)
04/22/2025	0.50	Sweeping Program #35	1ST DIST	LORD WILLOUGHBY WAY [1](WILLOUGHBY B
04/22/2025	0.60	Sweeping Program #35	1ST DIST	PALMETTO DR [1](REDBUD RD/REDBUD RD)
04/22/2025	0.36	Sweeping Program #35	1ST DIST	PROFITT PATH [1](WILLOUGHBYS WAY/CUL D
04/22/2025	0.72	Sweeping Program #35	1ST DIST	REDBUD RD [1](SWEETBAY DR/LABURNUM R
04/22/2025	0.24	Sweeping Program #35	1ST DIST	SEABROOK CT [1](ALBANTOWNE WAY/CUL D
04/22/2025	4.25	Sweeping Program #35	1ST DIST	WILLOUGHBY BEACH RD [1](TRIMBLE RD/KE
04/22/2025	0.50	Sweeping Program #35	1ST DIST	HARBOUR OAK DR [1](WILLOUGHBY BEACH
04/22/2025	1.58	Sweeping Program #35	1ST DIST	EBBTIDE DR [1](SOUNDING DR/SOUNDING DF
04/22/2025	0.10	Sweeping Program #35	1ST DIST	LABURNUM RD [1](WILLOUGHBY BEACH RD/
04/22/2025	0.46	Sweeping Program #35	1ST DIST	HAVEN PLACE [1](PIER DR/SOUNDING DR)
04/22/2025	0.22	Sweeping Program #35	1ST DIST	PIER DR [1](SOUNDING DR/DEEPWATER WAY)
04/22/2025	0.26	Sweeping Program #35	1ST DIST	SHELTER COVE ST [1](DEEP WATER WAY/EBB
04/22/2025	0.90	Sweeping Program #35	1ST DIST	DEEPWATER WAY [1](HARBOUR OAKS DR/EBE
04/22/2025	0.10	Sweeping Program #35	1ST DIST	TRADEWINDS CT [1](EBBTIDE CT/CUL DE SAC
04/22/2025	0.10	Sweeping Program #35	1ST DIST	BUOY CT [1](EBBTIDE DR/CUL DE SAC)
04/22/2025	0.90	Sweeping Program #35	1ST DIST	SOUNDING DR [1](EBBTIDE DR/TTA TO TTA)
04/22/2025	0.12	Sweeping Program #35	1ST DIST	SCHOLAR CT [1](WILLOUGHBY BEACH RD/CU
04/22/2025	0.18	Sweeping Program #35	1ST DIST	PERIWINKLE WAY [1](SANDPIPER CT/CUL DE
04/22/2025	0.26	Sweeping Program #35	1ST DIST	KINGFISHER ROAD [1](FREYS ROAD/CASPIAN
04/22/2025	0.18	Sweeping Program #35	1ST DIST	BLUEBERRY CT [1](SILVERSIDE RD/CUL DE SA
04/22/2025	0.20	Sweeping Program #35	1ST DIST	SUGARBERRY COURT [1](SILVERSIDE ROAD/C
04/22/2025	0.10	Sweeping Program #35	1ST DIST	GOLDENEYE COURT [1](OTTER CREEK ROAD/
04/22/2025	0.48	Sweeping Program #35	1ST DIST	OTTER CREEK ROAD [1](FREYS ROAD/CUL DE
04/22/2025	0.14	Sweeping Program #35	1ST DIST	BLUE HERON COURT [1](KINGFISHER RD/CUL
04/22/2025	0.20	Sweeping Program #35	1ST DIST	MOLLY COURT [1](SILVERSIDE RD/CUL-DE-SA
04/22/2025	0.90	Sweeping Program #35	1ST DIST	FREYS ROAD [1](END OF BT/DEAD END)
04/23/2025	1.10	Sweeping Program #35	1ST DIST	BAYBERRY RD [1](HANSON RD (N&S)/RT 755)
04/23/2025	0.14	Sweeping Program #35	1ST DIST	BELLFLOWER CT [1](BOXELDER DR/CUL DE S/
04/23/2025	0.72	Sweeping Program #35	1ST DIST	BOXELDER DR [1](HANSON RD/T TURN AROU
04/23/2025	0.68	Sweeping Program #35	1ST DIST	CEDAR DR [1](RT 755/END CO MAINT - T)
04/23/2025	0.06	Sweeping Program #35	1ST DIST	CHERRY CT [1](HANSON RD/CUL DE SAC)
04/23/2025	0.12	Sweeping Program #35	1ST DIST	FERN ST [1](HANSON RD/END CO MAINT)
04/23/2025	0.44	Sweeping Program #35	1ST DIST	LARCH DR [1](HANSON RD/BOXELDER DR)

04/23/2025	0.06	Sweeping Program #35	1ST DIST	LARCH CT [1](LARCH DR/CUL DE SAC)
04/23/2025	0.34	Sweeping Program #35	1ST DIST	TUPELO RD [1](BAYBERRY RD/CUL DE SAC)
04/23/2025	0.24	Sweeping Program #35	1ST DIST	WINGLEAF CT [1](BOXELDER DR/CUL DE SAC
04/23/2025	0.06	Sweeping Program #35	1ST DIST	MANDARIN CT [1](BOXELDER DR/CUL DE SAC
04/23/2025	3.50	Sweeping Program #35	1ST DIST	HANSON RD [1](PERRY AVE/RT 152)
04/24/2025	1.16	Sweeping Program #35	1ST DIST	TITAN TERRACE [1](ROBIN HOOD RD/END OF
04/24/2025	0.58	Sweeping Program #35	1ST DIST	APOLLO TERRACE [1](TITAN TERR/TELSTAR W
04/24/2025	0.86	Sweeping Program #35	1ST DIST	OLD ROBIN HOOD RD [1](RT 462/ROBIN HOOD
04/24/2025	4.88	Sweeping Program #35	1ST DIST	ROBIN HOOD RD [1](CHAPEL RD/RT 40)
04/24/2025	2.66	Sweeping Program #35	1ST DIST	OAKINGTON RD [1](RT 132/COUNTRY CLUB RI
04/30/2025	0.58	Sweeping Program #35	1ST DIST	ARTHUR WOODS DR [1](WHEEL RD/BRIANS G
04/30/2025	0.16	Sweeping Program #35	1ST DIST	TERESA MARIE CT [1](ARTHUR WOODS DR/CU
04/30/2025	0.22	Sweeping Program #35	1ST DIST	MIKE ANTHONY CT [1](ARTHUR WOODS DRIV
04/30/2025	0.10	Sweeping Program #35	1ST DIST	INEZ CT [1](ARTHUR WOODS DR/CUL DE SAC)
04/30/2025	0.20	Sweeping Program #35	1ST DIST	BRIANS GARTH, NORTH [1](ARTHUR WOODS D
04/30/2025	0.16	Sweeping Program #35	1ST DIST	BRIANS GARTH, SOUTH [1](ARTHUR WOODS D
04/30/2025	0.90	Sweeping Program #35	1ST DIST	MORRISON BLVD [1](LAPIDUM RD/LESLIE RD
04/30/2025	0.50	Sweeping Program #35	1ST DIST	FOLEY RD [1](LESLIE RD/LAPIDUM RD)
04/30/2025	1.04	Sweeping Program #35	1ST DIST	LESLIE RD [1](MORRISON BLVD/CUL DE SAC)
04/30/2025	0.52	Sweeping Program #35	1ST DIST	DAVIS RD [1](LESLIE RD/LESLIE RD)
05/01/2025	0.16	Sweeping Program #35	1ST DIST	ARMADA CT [1](BRITTANY DR/CUL DE SAC)
05/01/2025	0.70	Sweeping Program #35	1ST DIST	ACADIA DR [1](FOSTER KNOLL DR/HAVERHIL
05/01/2025	0.24	Sweeping Program #35	1ST DIST	AVEDON CT [1](STILLMEADOW DR/CUL DE SA
05/01/2025	0.10	Sweeping Program #35	1ST DIST	BARRINGTON CT [1](NEWBERRY CT/CUL DE S.
05/01/2025	0.12	Sweeping Program #35	1ST DIST	BELFAST CT [1](SPRINGDALE CT/CUL DE SAC)
05/01/2025	0.40	Sweeping Program #35	1ST DIST	BLACKBURN CT [1](STILLMEADOW DR/CUL D
05/01/2025	0.22	Sweeping Program #35	1ST DIST	BERKSHIRE CT [1](HAVERHILL RD/CUL DE SAC
05/01/2025	0.24	Sweeping Program #35	1ST DIST	BURNSIDE CT [1](STILLMEADOW DR/CUL DE S
05/01/2025	0.28	Sweeping Program #35	1ST DIST	BRITTANY DR [1](CHIMNEY OAK DR/T TURN A
05/01/2025	0.08	Sweeping Program #35	1ST DIST	CHARMUTH CT [1](HAVERHILL RD/CUL DE SA
05/01/2025	0.60	Sweeping Program #35	1ST DIST	CHIMNEY OAK DR [1](CUL DE SAC/T TURN AR
05/01/2025	0.04	Sweeping Program #35	1ST DIST	CUTLER CT [1](TARTAN GREEN CT/CUL DE SA
05/01/2025	1.89	Sweeping Program #35	1ST DIST	FOSTER KNOLL DR [1](TRIMBLE RD/DEAD EN
05/01/2025	0.08	Sweeping Program #35	1ST DIST	KENYON CT [1](BURNSIDE CT/CUL DE SAC)
05/01/2025	2.16	Sweeping Program #35	1ST DIST	HAVERHILL RD [1](TRIMBLE RD/END OF MAIN
05/01/2025	0.22	Sweeping Program #35	1ST DIST	OAKWAY CT [1](CHIMNEY OAK DR/CUL DE SA
05/01/2025	0.42	Sweeping Program #35	1ST DIST	RIPPLEWOOD RD [1](HAVERHILL RD/STILLME
05/01/2025	0.18	Sweeping Program #35	1ST DIST	DUNFIELD CT [1](LARKSPUR DR/CUL DE SAC)
05/01/2025	0.10	Sweeping Program #35	1ST DIST	FOWLER CT [1](LARKSPUR DR/CUL DE SAC)
05/01/2025	0.48	Sweeping Program #35	1ST DIST	LARKSPUR DR [1](JOPPA FARM RD/JOPPA FARI
05/01/2025	0.75	Sweeping Program #35	1ST DIST	TRAILS WAY(FOSTER KNOLL DRIVE/CDS / ISLA
05/01/2025	0.20	Sweeping Program #35	1ST DIST	SHEFFIELD CT [1](RIPPLEWOOD RD/CUL DE S.
05/01/2025	0.24	Sweeping Program #35	1ST DIST	SUMMERFIELD CT [1](RIPPLEWOOD RD/CUL D
05/01/2025	0.24	Sweeping Program #35	1ST DIST	SPRINGDALE CT [1](FOSTER KNOLL DR/CUL D
05/01/2025	1.00	Sweeping Program #35	1ST DIST	ROSECREST CT [1](FOSTER KNOLL DR/CUL DE
05/01/2025	0.22	Sweeping Program #35	1ST DIST	TANGLEWOOD CT [1](FOSTER KNOLL DR/CUL
05/01/2025	0.15	Sweeping Program #35	1ST DIST	WYCLIFF CT [1](ACADIA RD/CUL DE SAC)

Public Works - Bureau of Highways

Work Order Master Report

05/02/2025	1.56	Sweeping Program #35	1ST DIST	GARNETT RD [1](TRIMBLE RD/CUL DE SAC)
05/02/2025	0.46	Sweeping Program #35	1ST DIST	GILMOR RD [1](GARNETT RD/T TURN AROUNI
05/02/2025	0.10	Sweeping Program #35	1ST DIST	GLANDEL CT [1](GILMOR RD/CUL DE SAC)
05/02/2025	0.18	Sweeping Program #35	1ST DIST	GRIGSBY CT [1](GILMOR RD/CUL DE SAC)
05/02/2025	0.46	Sweeping Program #35	1ST DIST	HARDIN DR [1](HASLETT RD/HASLETT RD)
05/02/2025	0.94	Sweeping Program #35	1ST DIST	HASLETT RD [1](GARNETT RD/RIVERIA DR)
05/02/2025	0.08	Sweeping Program #35	1ST DIST	KANE CT [1](KEMPER RD/CUL DE SAC)
05/02/2025	0.76	Sweeping Program #35	1ST DIST	KEARNEY DR [1](JOPPA FARM RD/END CO MA
05/02/2025	0.10	Sweeping Program #35	1ST DIST	KIMBALL CT [1](KEMPER RD/CUL DE SAC)
05/02/2025	0.08	Sweeping Program #35	1ST DIST	KILGORE CT [1](KERSHAW RD/CDS TO CDS)
05/02/2025	0.36	Sweeping Program #35	1ST DIST	KEMPER RD [1](KEARNEY DR/GARNETT RD)
05/02/2025	0.18	Sweeping Program #35	1ST DIST	KERSHAW CT [1](KERSHAW RD/CDS TO CDS)
05/02/2025	0.36	Sweeping Program #35	1ST DIST	KERSHAW RD [1](KEARNEY DR/GARNETT RD)
05/02/2025	0.48	Sweeping Program #35	1ST DIST	LATIMER RD [1](KEARNEY DR/GARNETT RD)
05/02/2025	0.94	Sweeping Program #35	1ST DIST	RIVIERA DR [1](JOPPA FARM RD/KEARNEY DR
05/05/2025	0.75	Sweeping Program #35	1ST DIST	JAMES RUN RD [1](RT 136/STEPNEY RD)
05/05/2025	1.20	Sweeping Program #35	1ST DIST	STOCKTON RD [1](RT 152/DEAD END)
05/05/2025	1.50	Sweeping Program #35	1ST DIST	SINGER RD (W) [1](BEAVER DAM DR/RT 152)
06/05/2025	3.70	Sweeping Program #35	1ST DIST	HOOKERS MILL RD [1](ABINGDON RD/RT 136)
06/05/2025	3.26	Sweeping Program #35	1ST DIST	TOLLGATE PKWY [1](CONSTANT FRIENDSHIP
06/05/2025	1.00	Sweeping Program #35	1ST DIST	TOLLGATE RD [1](SINGER RD/WESTOVER LN)
06/05/2025	1.94	Sweeping Program #35	1ST DIST	TOLLGATE RD [1](WHEEL RD/SINGER RD)
06/05/2025	3.58	Sweeping Program #35	1ST DIST	STOCKTON RD [1](RT 152/DEAD END)
06/17/2025	1.25	Sweeping Program #35	1ST DIST	ABINGDON RD [1](RT 924/I-95 BRIDGE)
06/18/2025	1.00	Sweeping Program #35	1ST DIST	CINNAMON TREE DR [1](MERRICK WAY/LONC
Sweept leaves and debris up & Merrick				
06/20/2025	3.25	Sweeping Program #35	1ST DIST	ABINGDON RD [1](I-95 BRIDGE/RT 40)
06/30/2025	2.74	Sweeping Program #35	1ST DIST	CHURCH CREEK RD [1](RIVERSIDE PKWY/RIV
06/30/2025	1.76	Sweeping Program #35	1ST DIST	GREY'S RUN CIR [1](CHURCH CREEK RD/CHUI
06/30/2025	1.94	Sweeping Program #35	1ST DIST	BRASS MILL RD [1](RIVERSIDE PKWY/RT 7)
06/30/2025	0.88	Sweeping Program #35	1ST DIST	FOXGLOVE CT [1](CHURCH CREEK RD/CUL DI
06/30/2025	0.14	Sweeping Program #35	1ST DIST	OREGANUM CT [1](FOXGLOVE CT/CUL DE SA
06/30/2025	0.20	Sweeping Program #35	1ST DIST	TRILLIUM CT [1](FOX GLOVE CT/CUL DE SAC
06/30/2025	0.08	Sweeping Program #35	1ST DIST	LIATRIS LA [1](FOX GLOVE CT/CUL DE SAC)
06/30/2025	0.12	Sweeping Program #35	1ST DIST	OVERTON SQ [1](GREYS RUN CI/CUL DE SAC)
06/30/2025	0.20	Sweeping Program #35	1ST DIST	MAGNESS CT [1](GREYS RUN CI/MAGNESS CT
06/30/2025	0.35	Sweeping Program #35	1ST DIST	HAMPTON HALL CT [1](GREY'S RUN CIR/HAM
06/30/2025	1.00	Sweeping Program #35	1ST DIST	TALBOTT SQ [1](HAMPTON HALL CT/TALBOT
06/30/2025	0.40	Sweeping Program #35	1ST DIST	ASHMEAD SQUARE [1](GREY'S RUN CI/ASHME
06/30/2025	1.00	Sweeping Program #35	1ST DIST	CARLYLE GARTH [1](GREY'S RUN CIR/GREY'S
Total:	**448.87**			

Public Works - Bureau of Highways

Work Order Master Report

Work Order Labor, Equipment, and Material Details

ID	Description	Hours	Amount		
Labor					
005900	COLLINS, JESSE	24.00	$997.680		
006314	JONES, TIMOTHY	226.85	$8,686.280		
007857	LITTLE, III, BYRON	8.00	$280.290		
003133	ROBERTS, II, ROBIN	157.75	$7,905.370		
	Total:	**416.60**	**$17,869.620**		
ID	Description	Hours	Amount	Equip. Emp. ID	Equip. Emplo
Equipment					
214	2019 SWEEPER/INTERNATIONAL/WHII	0.30	$12.740		
214	2019 SWEEPER/INTERNATIONAL/WHII	3.50	$148.610	003133	ROBERTS, II
214	2019 SWEEPER/INTERNATIONAL/WHII	13.00	$551.990	005900	COLLINS, JE
214	2019 SWEEPER/INTERNATIONAL/WHII	215.15	$9,136.320	006314	JONES, TIM
215	SWEEPER 2022/PETERBILT VIN3BPPHI	1.75	$17.500	006314	JONES, TIM
215	SWEEPER 2022/PETERBILT VIN3BPPHI	159.45	$1,594.500	003133	ROBERTS, II
	Total:	**393.15**	**$11,461.660**		
ID	Description	Quantity	Amount		
Materials					
000264	LOADS TO YARD	89.60	$0.000		
000219	WATER (GALS) FOR PROJECTS/W&S H	110.00	$0.000		
	Total:	**199.60**	**$0.000**		
	Grand Total:	**1,009.35**	**$29,331.280**		

Public Works - Bureau of Highways

Work Order Master Report

Name: **SOUTHERN CORRIDOR SWEEPING 2024-2025** Started: 07/01/2024 Completed: 07/02/2024

Programmed Maintenance

Date	Units	Activity	Crew	Road / Subdivision
07/02/2024	0.75	Sweeping Program #35	1ST DIST	WEST SHORE DR [1](RT 40/PIRATES CT)
07/02/2024	0.20	Sweeping Program #35	1ST DIST	PIRATES CT [1](BECKON DR/END MAINT - NEW
07/02/2024	1.25	Sweeping Program #35	1ST DIST	TREE TOP DR [1](RT 40/BROOKSIDE DR)
07/02/2024	0.80	Sweeping Program #35	1ST DIST	GATEWAY RD [1](RT 40/BROOKSIDE DR)
07/02/2024	0.25	Sweeping Program #35	1ST DIST	WATERSIDE CT [1](BROOKSIDE DR/CUL DE SA
07/02/2024	0.50	Sweeping Program #35	1ST DIST	EDGEWATER DR [1](WATERGATE CT/DEAD EN
07/02/2024	0.48	Sweeping Program #35	1ST DIST	BROOKSIDE DR [1](WATERGATE DR/GILWAY C
07/02/2024	0.38	Sweeping Program #35	1ST DIST	WATERGATE CT [1](EDGEWATER DR/CUL DE S
07/02/2024	0.25	Sweeping Program #35	1ST DIST	WATERFOWL CT [1](ERMINE CT/CUL DE SAC)
07/03/2024	0.06	Sweeping Program #35	1ST DIST	ANTONY CT [1](HARBINGER TRAIL/CUL DE SA
07/03/2024	0.22	Sweeping Program #35	1ST DIST	GILWAY CT [1](BROOKSIDE DR/CUL DE SAC)
07/03/2024	0.08	Sweeping Program #35	1ST DIST	SERENITY CT [1](HARBINGER TRAIL/CUL DE S
07/03/2024	0.44	Sweeping Program #35	1ST DIST	TOP VIEW DR [1](BROOKSIDE DR/EDGEWATEI
07/03/2024	0.06	Sweeping Program #35	1ST DIST	SAILBOAT CT [1](HARBINGER TRAIL/CUL DE S
07/03/2024	0.04	Sweeping Program #35	1ST DIST	MALLARD CT [1](HARBINGER TRAIL/CUL DE S
07/03/2024	1.26	Sweeping Program #35	1ST DIST	HARBINGER TRAIL [1](EDGEWATER DR/EDGEW
07/03/2024	1.10	Sweeping Program #35	1ST DIST	EDGEWATER DR [1](WATERGATE CT/DEAD EN
07/03/2024	0.06	Sweeping Program #35	1ST DIST	MELODY CT [1](HARBINGER TRAIL/CUL DE SA
07/03/2024	0.18	Sweeping Program #35	1ST DIST	ERMINE CT [1](HARBINGER TRAIL/CUL DE SA
07/03/2024	0.28	Sweeping Program #35	1ST DIST	FISHERMAN LA [1](EDGEWATER DR/HARBING
07/10/2024	0.38	Sweeping Program #35	1ST DIST	GATEWAY RD [1](RT 40/BROOKSIDE DR)
07/10/2024	1.64	Sweeping Program #35	1ST DIST	BROOKSIDE DR [1](WATERGATE DR/GILWAY C
07/10/2024	0.22	Sweeping Program #35	1ST DIST	GILWAY CT [1](BROOKSIDE DR/CUL DE SAC)
07/10/2024	1.26	Sweeping Program #35	1ST DIST	HARBINGER TRAIL [1](EDGEWATER DR/EDGEW
07/10/2024	0.08	Sweeping Program #35	1ST DIST	SERENITY CT [1](HARBINGER TRAIL/CUL DE S
07/10/2024	0.06	Sweeping Program #35	1ST DIST	ANTONY CT [1](HARBINGER TRAIL/CUL DE SA
07/10/2024	0.04	Sweeping Program #35	1ST DIST	MALLARD CT [1](HARBINGER TRAIL/CUL DE S
07/10/2024	0.06	Sweeping Program #35	1ST DIST	MELODY CT [1](HARBINGER TRAIL/CUL DE SA
07/10/2024	0.06	Sweeping Program #35	1ST DIST	SAILBOAT CT [1](HARBINGER TRAIL/CUL DE S
07/10/2024	0.44	Sweeping Program #35	1ST DIST	TOP VIEW DR [1](BROOKSIDE DR/EDGEWATEI
07/10/2024	0.08	Sweeping Program #35	1ST DIST	WATERSIDE CT [1](BROOKSIDE DR/CUL DE SA
07/10/2024	0.18	Sweeping Program #35	1ST DIST	ERMINE CT [1](HARBINGER TRAIL/CUL DE SA
07/10/2024	0.44	Sweeping Program #35	1ST DIST	FISHERMAN LA [1](EDGEWATER DR/HARBING
07/11/2024	0.24	Sweeping Program #35	1ST DIST	STARBOARD DR [1](WEST SHORE DR/PIRATES
07/11/2024	0.52	Sweeping Program #35	1ST DIST	PIRATES CT [1](BECKON DR/END MAINT - NEW
07/11/2024	0.30	Sweeping Program #35	1ST DIST	LAKE FRONT DR [1](BECKON DR/WILLOW BE
07/11/2024	0.76	Sweeping Program #35	1ST DIST	WEST SHORE DR [1](RT 40/PIRATES CT)
07/11/2024	0.20	Sweeping Program #35	1ST DIST	WILLOW BEND DR [1](LAKE FRONT DR/DEAD
07/11/2024	0.24	Sweeping Program #35	1ST DIST	SAND PEBBLE DR [1](RT 40/BECKON DR)
07/11/2024	0.68	Sweeping Program #35	1ST DIST	BECKON DR [1](WEST SHORE DR/LAKE FRON
07/11/2024	0.34	Sweeping Program #35	1ST DIST	SKIPJACK COURT [1](SEARAY COURT/CUL DE
07/11/2024	0.14	Sweeping Program #35	1ST DIST	MAINSHIP WAY [1](SEARAY COURT/VIKING C(

07/11/2024	0.18	Sweeping Program #35	1ST DIST	VIKING COURT (E) [1](MAINSHIP WAY/CUL DE
07/11/2024	0.20	Sweeping Program #35	1ST DIST	VIKING COURT (W) [1](MAINSHIP WAY/CUL DI
07/11/2024	0.64	Sweeping Program #35	1ST DIST	SEARAY COURT [1](ROUTE 40/CUL DE SAC)
07/11/2024	0.44	Sweeping Program #35	1ST DIST	LONGLEY RD (E) [1](LONG BAR HARBOR RD/C
07/11/2024	0.74	Sweeping Program #35	1ST DIST	LONGLEY RD (W) [1](LONG BAR HARBOR RD/
07/11/2024	0.60	Sweeping Program #35	1ST DIST	FRANS DR (N) [1](LONGLEY RD/PAMELA DR)
07/11/2024	0.32	Sweeping Program #35	1ST DIST	FRANS DR (S) [1](LONGLEY RD/CUL DE SAC)
07/11/2024	0.12	Sweeping Program #35	1ST DIST	ST ALBANS CT [1](LONGLEY RD/CUL DE SAC)
07/11/2024	0.10	Sweeping Program #35	1ST DIST	ST SEBASTIAN CT [1](FRANS DR (S)/CUL DE S/
07/11/2024	1.54	Sweeping Program #35	1ST DIST	SPESUTIA RD [1](RT 40/RT 159)
07/11/2024	0.50	Sweeping Program #35	1ST DIST	BATA BLVD [1](ROUTE 40/CUL DE SAC)
07/15/2024	3.88	Sweeping Program #35	1ST DIST	SHORE DRIVE [1](ANCHOR DRIVE/CUL-DE-SA
07/15/2024	0.10	Sweeping Program #35	1ST DIST	STONE HARBOR CT [1](SHORE DR/CUL DE SAC
07/15/2024	0.96	Sweeping Program #35	1ST DIST	ANCHOR DR [1](BRIDGE DR/SHORE DR)
07/15/2024	0.16	Sweeping Program #35	1ST DIST	BEACON POINT CT [1](SHORE DR/CUL DE SAC)
07/15/2024	0.26	Sweeping Program #35	1ST DIST	BREAKWATER CT [1](SHORE DR/CUL DE SAC)
07/15/2024	0.80	Sweeping Program #35	1ST DIST	BRIDGE DR [1](ANCHOR DR/TOWNE CENTER I
07/15/2024	0.12	Sweeping Program #35	1ST DIST	OLD CHURCH DR [1](COURT RD/NEPTUNE DR)
07/15/2024	0.75	Sweeping Program #35	1ST DIST	OLD SOUND RD [1](NEPTUNE DR/BRIDGE DR)
07/15/2024	0.26	Sweeping Program #35	1ST DIST	RAVENSWOOD CT [1](SHORE DR/CUL DE SAC)
07/15/2024	0.24	Sweeping Program #35	1ST DIST	SHELL COVE CT [1](SHORE DR/CUL DE SAC)
07/15/2024	0.06	Sweeping Program #35	1ST DIST	MONTEREY CT [1](OLD SOUND DR/CUL DE SA
07/15/2024	0.22	Sweeping Program #35	1ST DIST	COURT DR [1](ANCHOR DR/OLD CHURCH DR)
07/15/2024	0.24	Sweeping Program #35	1ST DIST	DRIFTWOOD CT [1](SHORE DR/CUL DE SAC)
07/16/2024	0.54	Sweeping Program #35	1ST DIST	PERRYWOOD DR [1](SPESUTIA RD/END MAIN
07/16/2024	0.18	Sweeping Program #35	1ST DIST	TEAKE LA [1](PERRYWOOD DR/WILLSHIRE DI
07/16/2024	1.54	Sweeping Program #35	1ST DIST	SPESUTIA RD [1](RT 40/RT 159)
07/16/2024	0.24	Sweeping Program #35	1ST DIST	SHORT LA (EXT) [1](RT 715/DEAD END)
07/16/2024	0.42	Sweeping Program #35	1ST DIST	WILLSHIRE DR [1](SPESUTIA RD/END MAINT)
07/16/2024	0.28	Sweeping Program #35	1ST DIST	CHURCH POINT CT [1](POPLAR GROVE AVE/CU
07/16/2024	0.78	Sweeping Program #35	1ST DIST	POPLAR GROVE AVE [1](PINE AVE/CANNING H
07/16/2024	0.32	Sweeping Program #35	1ST DIST	PINE AVENUE [1](POPLAR GROVE AVE/OAKDA
07/16/2024	0.32	Sweeping Program #35	1ST DIST	HOLLY AVENUE [1](PINE AVENUE/MITCHELL I
07/16/2024	0.50	Sweeping Program #35	1ST DIST	GABLER'S SHORE COURT(MARINA AVENUE/CU
07/16/2024	0.75	Sweeping Program #35	1ST DIST	MARINA AVENUE(RT. 159/BACK TO RT. 159 (CII
07/17/2024	0.20	Sweeping Program #35	1ST DIST	AMEDORO COURT [1](ROUTE 7/CUL DE SAC)
07/17/2024	0.26	Sweeping Program #35	1ST DIST	ROSARY COURT [1](AMEDORO COURT/CUL DE
07/17/2024	3.02	Sweeping Program #35	1ST DIST	COUNTRY CLUB RD [1](OAKINGTON RD/T TUI
07/17/2024	0.20	Sweeping Program #35	1ST DIST	SHENANDOAH COURT [1](ROGERS FORD LANI
07/17/2024	1.88	Sweeping Program #35	1ST DIST	TRIMBLE RD (W) [1](JOPPA RD/JOPPA FARM RI
07/17/2024	1.00	Sweeping Program #35	1ST DIST	ELK COURT(POTOMAC ROAD/T-TURN AROUNI
07/17/2024	0.25	Sweeping Program #35	1ST DIST	POTOMAC ROAD(ROGERS FORD LANE/515 POT
07/17/2024	0.68	Sweeping Program #35	1ST DIST	ROGERS FORD LANE [1](TRIMBLE ROAD/UNKI
07/17/2024	0.28	Sweeping Program #35	1ST DIST	SCANNELL CT [1](TRIMBLE RD/CUL DE SAC)
07/17/2024	0.26	Sweeping Program #35	1ST DIST	BROOKE CT [1](MAGNOLIA RIDGE/CUL DE SAC
07/17/2024	0.34	Sweeping Program #35	1ST DIST	MAGNOLIA RIDGE DR [1](TRIMBLE RD/DEAD
07/17/2024	0.22	Sweeping Program #35	1ST DIST	WHITE PINE LA [1](MAGNOLIA RIDGE/WOODI

Public Works - Bureau of Highways

Work Order Master Report

07/17/2024	36.00	Sweeping Program #35	1ST DIST	WOODMONT CT [1](MAGNOLIA RIDGE/CUL DI
07/18/2024	0.50	Sweeping Program #35	1ST DIST	FALCONBRIDGE DR [1](TRIMBLE RD/TRIMBLI
07/18/2024	0.60	Sweeping Program #35	1ST DIST	EMMERICK DR [1](TRIMBLE RD/ENFIELD RD)
07/18/2024	0.62	Sweeping Program #35	1ST DIST	ECKHART DR [1](EMMERICK DR/ENSOR DR)
07/18/2024	0.08	Sweeping Program #35	1ST DIST	ERICKSON CT [1](ECKHART DR/CUL DE SAC)
07/18/2024	0.10	Sweeping Program #35	1ST DIST	ECHOLS CT [1](ECKHART DR/CUL DE SAC)
07/18/2024	0.04	Sweeping Program #35	1ST DIST	ECKHART CT [1](ECKHART DR/CUL DE SAC)
07/18/2024	0.70	Sweeping Program #35	1ST DIST	ERWIN DR [1](TRIMBLE RD/ENFIELD RD)
07/18/2024	0.72	Sweeping Program #35	1ST DIST	ENSOR DR [1](ERWIN DR/ENFIELD RD)
07/18/2024	1.68	Sweeping Program #35	1ST DIST	ENFIELD RD [1](RT 40/CUL DE SAC)
07/18/2024	0.48	Sweeping Program #35	1ST DIST	JOPPA CROSSING CT [1](ENFIELD RD/CUL DE S
07/18/2024	0.44	Sweeping Program #35	1ST DIST	JOPPA CROSSING WAY [1](ENFIELD RD/JOPPA (
07/18/2024	0.16	Sweeping Program #35	1ST DIST	STONE CT [1](ENFIELD RD/CUL DE SAC)
07/18/2024	0.36	Sweeping Program #35	1ST DIST	MARINER RD [1](TRIMBLE RD/ENFIELD RD)
07/18/2024	0.04	Sweeping Program #35	1ST DIST	EDELIN RD [1](ERWIN DR/DEAD END)
07/18/2024	0.18	Sweeping Program #35	1ST DIST	ADAIR CT [1](AVERILL RD/END CO MAINT)
07/18/2024	0.32	Sweeping Program #35	1ST DIST	AVERILL RD [1](TRIMBLE RD/BARKSDALE RD)
07/18/2024	0.10	Sweeping Program #35	1ST DIST	AVERY CT [1](AVERILL RD/CUL DE SAC)
07/19/2024	1.10	Sweeping Program #35	1ST DIST	FALCONER RD [1](JOPPA FARM RD/CUL DE SA
07/19/2024	0.86	Sweeping Program #35	1ST DIST	FALCONER RD [1](DURYEA DR/JOPPA FARM RI
07/19/2024	0.20	Sweeping Program #35	1ST DIST	RED HAVEN COURT [1](FALCONER RD/FALCOI
07/19/2024	0.20	Sweeping Program #35	1ST DIST	JONATHAN DRIVE [1](FALCONER ROAD/BALD
07/19/2024	0.78	Sweeping Program #35	1ST DIST	MACINTOSH CIRCLE [1](FALCONER ROAD/FAI
07/22/2024	4.25	Sweeping Program #35	1ST DIST	JOPPA FARM RD (S) [1](RT 40/HAVERHILL RD)
07/22/2024	0.10	Sweeping Program #35	1ST DIST	CHANDLER CT [1](JOPPA FARM RD/CUL DE SA
07/22/2024	0.04	Sweeping Program #35	1ST DIST	CUTLER CT [1](TARTAN GREEN CT/CUL DE SA
07/22/2024	0.18	Sweeping Program #35	1ST DIST	DUNFIELD CT [1](LARKSPUR DR/CUL DE SAC)
07/22/2024	0.10	Sweeping Program #35	1ST DIST	FOWLER CT [1](LARKSPUR DR/CUL DE SAC)
07/22/2024	0.48	Sweeping Program #35	1ST DIST	LARKSPUR DR [1](JOPPA FARM RD/JOPPA FARI
07/22/2024	0.70	Sweeping Program #35	1ST DIST	ACADIA DR [1](FOSTER KNOLL DR/HAVERHIL
07/22/2024	0.12	Sweeping Program #35	1ST DIST	WYCLIFF CT [1](ACADIA RD/CUL DE SAC)
07/22/2024	0.22	Sweeping Program #35	1ST DIST	TANGLEWOOD CT [1](FOSTER KNOLL DR/CUL
07/22/2024	0.35	Sweeping Program #35	1ST DIST	TRAILS WAY(FOSTER KNOLL DRIVE/CDS / ISL/
07/22/2024	0.12	Sweeping Program #35	1ST DIST	BELFAST CT [1](SPRINGDALE CT/CUL DE SAC)
07/22/2024	1.80	Sweeping Program #35	1ST DIST	FOSTER KNOLL DR [1](TRIMBLE RD/DEAD EN
07/22/2024	0.12	Sweeping Program #35	1ST DIST	ROSECREST CT [1](FOSTER KNOLL DR/CUL DI
07/22/2024	0.24	Sweeping Program #35	1ST DIST	SPRINGDALE CT [1](FOSTER KNOLL DR/CUL D
07/22/2024	0.28	Sweeping Program #35	1ST DIST	SWEETBRIAR COURT [1](FOSTER KNOLL DRIV
07/23/2024	0.90	Sweeping Program #35	1ST DIST	RIVIERA DR [1](JOPPA FARM RD/KEARNEY DR
07/23/2024	0.94	Sweeping Program #35	1ST DIST	HASLETT RD [1](GARNETT RD/RIVERIA DR)
07/23/2024	0.76	Sweeping Program #35	1ST DIST	KEARNEY DR [1](JOPPA FARM RD/END CO MA
07/23/2024	0.48	Sweeping Program #35	1ST DIST	LATIMER RD [1](KEARNEY DR/GARNETT RD)
07/23/2024	0.08	Sweeping Program #35	1ST DIST	KANE CT [1](KEMPER RD/CUL DE SAC)
07/23/2024	0.10	Sweeping Program #35	1ST DIST	KIMBALL CT [1](KEMPER RD/CUL DE SAC)
07/23/2024	0.08	Sweeping Program #35	1ST DIST	KILGORE CT [1](KERSHAW RD/CDS TO CDS)
07/23/2024	0.18	Sweeping Program #35	1ST DIST	KERSHAW CT [1](KERSHAW RD/CDS TO CDS)
07/23/2024	1.56	Sweeping Program #35	1ST DIST	GARNETT RD [1](TRIMBLE RD/CUL DE SAC)

07/24/2024	0.46	Sweeping Program #35	1ST DIST	DURYEA DR [1](JOPPA FARM RD/DEAD END)
07/24/2024	1.06	Sweeping Program #35	1ST DIST	DONCASTER RD [1](JOPPA FARM RD/DURYEA
07/24/2024	0.06	Sweeping Program #35	1ST DIST	CANBY CT [1](CHELL RD/CUL DE SAC)
07/24/2024	0.64	Sweeping Program #35	1ST DIST	CHELL RD [1](DONCASTER RD/DONCASTER R
07/24/2024	0.06	Sweeping Program #35	1ST DIST	CURRY CT [1](CHELL RD/CUL DE SAC)
07/24/2024	0.06	Sweeping Program #35	1ST DIST	DALLAS CT [1](DONCASTER RD/CUL DE SAC)
07/24/2024	0.06	Sweeping Program #35	1ST DIST	DREW CT [1](DONCASTER RD/CUL DE SAC)
07/24/2024	1.96	Sweeping Program #35	1ST DIST	FALCONER RD [1](DURYEA DR/JOPPA FARM RI
07/24/2024	0.06	Sweeping Program #35	1ST DIST	FRAZIER CT [1](FERGUSON RD/CUL DE SAC)
07/24/2024	0.35	Sweeping Program #35	1ST DIST	FOXWELL RD [1](FITZHUGH RD/FERGUSON RI
07/24/2024	0.10	Sweeping Program #35	1ST DIST	FUNSTEN CT [1](FALCONER RD/CUL DE SAC)
07/24/2024	0.32	Sweeping Program #35	1ST DIST	FITZHUGH RD [1](JOPPA FARM RD/FALCONER
07/24/2024	0.22	Sweeping Program #35	1ST DIST	BERKSHIRE CT [1](HAVERHILL RD/CUL DE SAC
07/24/2024	2.16	Sweeping Program #35	1ST DIST	HAVERHILL RD [1](TRIMBLE RD/END OF MAIN
07/24/2024	0.10	Sweeping Program #35	1ST DIST	RAMSEY COURT [1](HAVERHILL ROAD/CUL DE
07/25/2024	0.24	Sweeping Program #35	1ST DIST	AVEDON CT [1](STILLMEADOW DR/CUL DE SA
07/25/2024	0.88	Sweeping Program #35	1ST DIST	STILLMEADOW DR [1](JOPPA FARM RD/HAVEF
07/25/2024	0.46	Sweeping Program #35	1ST DIST	ROXBURY CT [1](STILLMEADOW DR/CUL DE S
07/25/2024	0.40	Sweeping Program #35	1ST DIST	BLACKBURN CT [1](STILLMEADOW DR/CUL D
07/25/2024	0.60	Sweeping Program #35	1ST DIST	CHIMNEY OAK DR [1](CUL DE SAC/T TURN AR
07/25/2024	0.28	Sweeping Program #35	1ST DIST	BRITTANY DR [1](CHIMNEY OAK DR/T TURN A
07/25/2024	0.06	Sweeping Program #35	1ST DIST	ARMADA CT [1](BRITTANY DR/CUL DE SAC)
07/25/2024	0.22	Sweeping Program #35	1ST DIST	OAKWAY CT [1](CHIMNEY OAK DR/CUL DE SA
07/25/2024	0.08	Sweeping Program #35	1ST DIST	KENYON CT [1](BURNSIDE CT/CUL DE SAC)
07/25/2024	0.24	Sweeping Program #35	1ST DIST	BURNSIDE CT [1](STILLMEADOW DR/CUL DE S
07/25/2024	0.34	Sweeping Program #35	1ST DIST	MAGNOLIA RIDGE DR [1](TRIMBLE RD/DEAD
07/25/2024	0.22	Sweeping Program #35	1ST DIST	MAGNOLIA WOODS LA [1](RT 40/DEAD END)
07/25/2024	0.26	Sweeping Program #35	1ST DIST	BROOKE CT [1](MAGNOLIA RIDGE/CUL DE SAC
07/25/2024	0.22	Sweeping Program #35	1ST DIST	WHITE PINE LA [1](MAGNOLIA RIDGE/WOODM
07/25/2024	0.36	Sweeping Program #35	1ST DIST	WOODMONT CT [1](MAGNOLIA RIDGE/CUL DI
07/25/2024	0.08	Sweeping Program #35	1ST DIST	OLD NUTTAL AVE [1](NUTTAL AVE (W)/NUTTA
07/25/2024	1.26	Sweeping Program #35	1ST DIST	NUTTAL AVE (E) [1](RT 755/DEAD END)
07/25/2024	1.04	Sweeping Program #35	1ST DIST	NUTTAL AVE (W) [1](TRIMBLE RD/OLD NUTTA
07/25/2024	0.26	Sweeping Program #35	1ST DIST	SKY BLUE CT [1](NUTTAL AVE (W)/CUL DE SA
07/25/2024	0.24	Sweeping Program #35	1ST DIST	SEVERN WAY [1](TRIMBLE ROAD/SEVERN WA
07/25/2024	0.75	Sweeping Program #35	1ST DIST	TRIMBLE RD (W) [1](JOPPA RD/JOPPA FARM RI
07/26/2024	5.42	Sweeping Program #35	1ST DIST	HANSON RD [1](PERRY AVE/RT 152)
07/26/2024	7.16	Sweeping Program #35	1ST DIST	WILLOUGHBY BEACH RD [1](TRIMBLE RD/KE
07/26/2024	5.84	Sweeping Program #35	1ST DIST	TRIMBLE RD (E) [1](RT 755/GARNETT RD)
07/26/2024	3.14	Sweeping Program #35	1ST DIST	EDGEWOOD RD [1](RT 40/VAN BIBBER RD (N))
07/29/2024	1.80	Sweeping Program #35	1ST DIST	BROADNECK CROSSING RD [1](WILLOUGHBY
07/29/2024	0.32	Sweeping Program #35	1ST DIST	BEAVER CROSSING ROAD [1](BROADNECK CR
07/29/2024	0.12	Sweeping Program #35	1ST DIST	CROWN CI [1](BROADNECK CROSSING RD/BR
07/29/2024	0.20	Sweeping Program #35	1ST DIST	MAJESTY LN [1](BROADNECK CROSSING RD/(
07/29/2024	0.14	Sweeping Program #35	1ST DIST	KEALE WAY [1](BROADNECK CROSSING RD/C
07/29/2024	0.08	Sweeping Program #35	1ST DIST	KING JAMES CI [1](BROADNECK CROSSING RI
07/29/2024	0.10	Sweeping Program #35	1ST DIST	BOURNE WAY [1](BROADNECK CROSSING WA

Public Works - Bureau of Highways

Work Order Master Report

07/29/2024	0.12	Sweeping Program #35	1ST DIST	BAGNELL COURT [1](BROADNECK CROSSING
07/29/2024	0.14	Sweeping Program #35	1ST DIST	CANOE LANE [1](INDIANS LAIR/CUL DE SAC)
07/29/2024	0.18	Sweeping Program #35	1ST DIST	CAPTAINS COVE COURT [1](WILLOUGHBYS W
07/29/2024	0.12	Sweeping Program #35	1ST DIST	HERITAGE THRONE WAY [1](MAIDENS LANE/(
07/29/2024	0.42	Sweeping Program #35	1ST DIST	BAUERS DR [1](WILLOUGHBY BEACH RD/DEA
07/29/2024	0.24	Sweeping Program #35	1ST DIST	INDIAN'S LAIR [1](BROADNECK CROSSING RD
07/29/2024	0.22	Sweeping Program #35	1ST DIST	MAIDENS LANE [1](BROADNECK CROSSING R
07/29/2024	0.50	Sweeping Program #35	1ST DIST	LORD WILLOUGHBY WAY [1](WILLOUGHBY B
07/29/2024	0.36	Sweeping Program #35	1ST DIST	PROFITT PATH [1](WILLOUGHBYS WAY/CUL D
07/29/2024	0.24	Sweeping Program #35	1ST DIST	TODKILL TRACE [1](WILLOUGHBYS WAY/CUI
07/29/2024	0.74	Sweeping Program #35	1ST DIST	AHERN DRIVE [1](WILLOUGHBY BEACH ROAI
07/30/2024	0.12	Sweeping Program #35	1ST DIST	YOST COURT [1](AHERN DRIVER/CUL DE SAC
07/30/2024	1.02	Sweeping Program #35	1ST DIST	SIWANOY DRIVE [1](AHERN DRIVE/CUL DE SA
07/30/2024	0.34	Sweeping Program #35	1ST DIST	ANCON COURT [1](AHERN DRIVE/CUL DE SAC
07/30/2024	0.40	Sweeping Program #35	1ST DIST	MAHONIA WAY [1](REDBUD RD/SIWANOY DR)
07/30/2024	0.60	Sweeping Program #35	1ST DIST	PALMETTO DR [1](REDBUD RD/REDBUD RD)
07/30/2024	0.10	Sweeping Program #35	1ST DIST	IRIS DR [1](LABURNUM RD/WINTERBERRY DF
07/30/2024	1.02	Sweeping Program #35	1ST DIST	ALBANTOWNE WAY [1](WILLOUGHBY BEACH
07/30/2024	0.08	Sweeping Program #35	1ST DIST	WINTERBERRY CT [1](WINTERBERRY DR/CUL
07/30/2024	1.28	Sweeping Program #35	1ST DIST	WINTERBERRY DR [1](LABURNUM RD/WINTE
07/30/2024	1.10	Sweeping Program #35	1ST DIST	DECLARATION CIR [1](CHURCH CREEK RD/CH
07/30/2024	0.08	Sweeping Program #35	1ST DIST	CLARY CT [1](MARIGOLD LA/CUL DE SAC)
07/30/2024	0.38	Sweeping Program #35	1ST DIST	COLLIER LA [1](ALLISON CT/CUL DE SAC)
07/30/2024	0.30	Sweeping Program #35	1ST DIST	COURTNEY LA [1](CHURCH CREEK RD/CUL DI
07/30/2024	0.46	Sweeping Program #35	1ST DIST	GILMOR RD [1](GARNETT RD/T TURN AROUNI
07/30/2024	0.38	Sweeping Program #35	1ST DIST	POLICY DR [1](RT 543/CHURCH CREEK DR)
07/30/2024	1.14	Sweeping Program #35	1ST DIST	BANEBERRY DR [1](CHURCH CREEK RD/RT 7)
07/30/2024	0.38	Sweeping Program #35	1ST DIST	ALLISON CT [1](CHURCH CREEK RD/CUL DE S/
07/30/2024	0.08	Sweeping Program #35	1ST DIST	LAVENDAR CT [1](MARIGOLD LN/CUL DE SAC
07/30/2024	0.06	Sweeping Program #35	1ST DIST	MARIGOLD CT [1](MARIGOLD LA/CUL DE SAC
07/30/2024	0.42	Sweeping Program #35	1ST DIST	MARIGOLD LA [1](BANEBERRY DR/CUL DE SA
07/30/2024	0.32	Sweeping Program #35	1ST DIST	JAMISON CT [1](DECLARATION CIR/CUL DE S/
07/30/2024	0.20	Sweeping Program #35	1ST DIST	PEARSON PL [1](DECLARATION CI/CUL DE SA(
07/31/2024	0.66	Sweeping Program #35	1ST DIST	SILVERSIDE RD [1](WILLOUGHBY BEACH RD/
07/31/2024	0.18	Sweeping Program #35	1ST DIST	SUGARBERRY COURT [1](SILVERSIDE ROAD/C
07/31/2024	0.14	Sweeping Program #35	1ST DIST	BLUEBERRY CT [1](SILVERSIDE RD/CUL DE SA
07/31/2024	0.18	Sweeping Program #35	1ST DIST	BLACKBIRD COURT [1](KINGFISHER RD/CUL D
07/31/2024	0.12	Sweeping Program #35	1ST DIST	BLUE HERON COURT [1](KINGFISHER RD/CUL
07/31/2024	1.25	Sweeping Program #35	1ST DIST	FREYS ROAD [1](END OF BT/DEAD END)
07/31/2024	0.28	Sweeping Program #35	1ST DIST	KINGFISHER ROAD [1](FREYS ROAD/CASPIAN
07/31/2024	0.22	Sweeping Program #35	1ST DIST	CASPIAN COURT [1](OTTER CREEK ROAD/CUI
07/31/2024	0.68	Sweeping Program #35	1ST DIST	OTTER CREEK ROAD [1](FREYS ROAD/CUL DE
07/31/2024	0.12	Sweeping Program #35	1ST DIST	PINTAIL COURT [1](OTTER CREEK ROAD/CUL
07/31/2024	0.16	Sweeping Program #35	1ST DIST	MOLLY COURT [1](SILVERSIDE RD/CUL-DE-SA
07/31/2024	0.08	Sweeping Program #35	1ST DIST	GOLDENEYE COURT [1](OTTER CREEK ROAD/
07/31/2024	0.18	Sweeping Program #35	1ST DIST	ARUM CT [1](SILVERSIDE RD/CUL DE SAC)
07/31/2024	0.16	Sweeping Program #35	1ST DIST	ORCHID CT [1](SILVERSIDE RD/CUL DE SAC)



Public Works - Bureau of Highways

Work Order Master Report

07/31/2024	1.58	Sweeping Program #35	1ST DIST	EBBTIDE DR [1](SOUNDING DR/SOUNDING DF
07/31/2024	0.10	Sweeping Program #35	1ST DIST	BUOY CT [1](EBBTIDE DR/CUL DE SAC)
07/31/2024	0.46	Sweeping Program #35	1ST DIST	DEEPWATER WAY [1](HARBOUR OAKS DR/EBE
07/31/2024	0.28	Sweeping Program #35	1ST DIST	SHELTER COVE ST [1](DEEP WATER WAY/EBB
07/31/2024	0.08	Sweeping Program #35	1ST DIST	TRADEWINDS CT [1](EBBTIDE CT/CUL DE SAC
08/02/2024	1.24	Sweeping Program #35	1ST DIST	PERRY AVE [1](WILLOUGHBY BEACH RD/T TU
08/02/2024	0.24	Sweeping Program #35	1ST DIST	PAPAYA RD [1](SEQUOIA DR/PERRY AVE)
08/02/2024	0.06	Sweeping Program #35	1ST DIST	PERRY CT [1](PERRY AVE/CUL DE SAC)
08/02/2024	1.10	Sweeping Program #35	1ST DIST	SEQUOIA DR [1](WILLOUGHBY BEACH RD/SEC
08/02/2024	0.44	Sweeping Program #35	1ST DIST	SYCAMORE LA [1](PAPAYA RD/GREENHEART I
08/02/2024	0.06	Sweeping Program #35	1ST DIST	ARBOR CT [1](THORNBERRY DR/CUL DE SAC)
08/02/2024	0.06	Sweeping Program #35	1ST DIST	ASPEN CT [1](PERRY AVE/CUL DE SAC)
08/02/2024	0.08	Sweeping Program #35	1ST DIST	BUTTERNUT CT [1](HARTWOOD LA/CUL DE SA
08/02/2024	0.08	Sweeping Program #35	1ST DIST	BURLWOOD CT [1](HARTWOOD LA/CUL DE SA
08/02/2024	0.10	Sweeping Program #35	1ST DIST	CATALPA LA [1](PERRY AVE/CUL DE SAC)
08/02/2024	0.68	Sweeping Program #35	1ST DIST	CEDAR DR [1](RT 755/END CO MAINT - T)
08/02/2024	0.42	Sweeping Program #35	1ST DIST	GREENHEART LA [1](PERRY AVE/SEQUOIA DR
08/02/2024	0.40	Sweeping Program #35	1ST DIST	HARTWOOD LA [1](THORNBERRY DR/SEQUOI
08/02/2024	0.24	Sweeping Program #35	1ST DIST	RETREAT CT [1](EDGEWOOD RD/CUL DE SAC)
08/02/2024	0.72	Sweeping Program #35	1ST DIST	THORNBERRY DR [1](SEQUOIA DR/SEQUOIA D
08/06/2024	1.48	Sweeping Program #35	1ST DIST	CLOVER VALLEY WAY [1](WOODBRIDGE CENT
08/06/2024	0.14	Sweeping Program #35	1ST DIST	CLOVER VALLEY CT (N) [1](CLOVER VALLEY
08/06/2024	1.78	Sweeping Program #35	1ST DIST	WOODBRIDGE CENTER WAY [1](RT 40/HANSO
08/06/2024	0.64	Sweeping Program #35	1ST DIST	WINDY BRANCH WAY [1](RT 152/WOODBRIDG
08/06/2024	0.38	Sweeping Program #35	1ST DIST	WOODBRIDGE STATION WAY [1](WOODBRIDG
08/06/2024	0.08	Sweeping Program #35	1ST DIST	DOGWOOD DELL CT [1](CLOVER VALLEY WAY
08/06/2024	0.16	Sweeping Program #35	1ST DIST	CEDAR CREST CT [1](WINDY BRANCH WAY/CU
08/06/2024	0.14	Sweeping Program #35	1ST DIST	LILY POND CT [1](CLOVER VALLEY WAY/CUL
08/06/2024	0.08	Sweeping Program #35	1ST DIST	RAINBOW GARDEN CT [1](WINDY BRANCH W
08/06/2024	0.06	Sweeping Program #35	1ST DIST	APPLE ORCHARD CT [1](WINDY BRANCH WAY
08/06/2024	0.10	Sweeping Program #35	1ST DIST	PINEFIELD CT [1](PINEFIELD WAY/CUL DE SAC
08/06/2024	0.42	Sweeping Program #35	1ST DIST	PINEFIELD WAY [1](HANSON RD/WINDY BRAN
08/06/2024	0.50	Sweeping Program #35	1ST DIST	CHARLESTOWN DR [1](HARFORD SQUARE DR
08/06/2024	1.38	Sweeping Program #35	1ST DIST	HARFORD SQUARE DR [1](HANSON RD/HANSC
08/07/2024	1.64	Sweeping Program #35	1ST DIST	BROOKSIDE DR [1](WATERGATE DR/GILWAY CT
08/07/2024	0.38	Sweeping Program #35	1ST DIST	GATEWAY RD [1](RT 40/BROOKSIDE DR)
08/07/2024	0.22	Sweeping Program #35	1ST DIST	GILWAY CT [1](BROOKSIDE DR/CUL DE SAC)
08/07/2024	0.14	Sweeping Program #35	1ST DIST	SMALLCREST DR [1](BROOKSIDE DR/DEAD EI
08/07/2024	0.08	Sweeping Program #35	1ST DIST	SERENITY CT [1](HARBINGER TRAIL/CUL DE S
08/07/2024	0.44	Sweeping Program #35	1ST DIST	TOP VIEW DR [1](BROOKSIDE DR/EDGEWATEI
08/07/2024	0.06	Sweeping Program #35	1ST DIST	SAILBOAT CT [1](HARBINGER TRAIL/CUL DE S
08/07/2024	1.26	Sweeping Program #35	1ST DIST	HARBINGER TRAIL [1](EDGEWATER DR/EDGEV
08/07/2024	0.06	Sweeping Program #35	1ST DIST	ANTONY CT [1](HARBINGER TRAIL/CUL DE SA
08/07/2024	1.10	Sweeping Program #35	1ST DIST	EDGEWATER DR [1](WATERGATE CT/DEAD EN
08/07/2024	0.18	Sweeping Program #35	1ST DIST	ERMINE CT [1](HARBINGER TRAIL/CUL DE SA
08/07/2024	0.04	Sweeping Program #35	1ST DIST	MALLARD CT [1](HARBINGER TRAIL/CUL DE S
08/07/2024	0.06	Sweeping Program #35	1ST DIST	MELODY CT [1](HARBINGER TRAIL/CUL DE SA



Public Works - Bureau of Highways

Work Order Master Report

08/07/2024	0.36	Sweeping Program #35	1ST DIST	TREE TOP DR [1](RT 40/BROOKSIDE DR)
08/07/2024	0.08	Sweeping Program #35	1ST DIST	WATERFOWL CT [1](ERMINE CT/CUL DE SAC)
08/07/2024	0.34	Sweeping Program #35	1ST DIST	WATERGATE CT [1](EDGEWATER DR/CUL DE S
08/13/2024	0.52	Sweeping Program #35	1ST DIST	PIRATES CT [1](BECKON DR/END MAINT - NEV
08/13/2024	0.24	Sweeping Program #35	1ST DIST	STARBOARD DR [1](WEST SHORE DR/PIRATES
08/13/2024	0.76	Sweeping Program #35	1ST DIST	WEST SHORE DR [1](RT 40/PIRATES CT)
08/13/2024	0.20	Sweeping Program #35	1ST DIST	WILLOW BEND DR [1](LAKE FRONT DR/DEAD
08/13/2024	0.68	Sweeping Program #35	1ST DIST	BECKON DR [1](WEST SHORE DR/LAKE FRON
08/13/2024	0.30	Sweeping Program #35	1ST DIST	LAKE FRONT DR [1](BECKON DR/WILLOW BE
08/13/2024	0.24	Sweeping Program #35	1ST DIST	SAND PEBBLE DR [1](RT 40/BECKON DR)
08/13/2024	0.64	Sweeping Program #35	1ST DIST	SEARAY COURT [1](ROUTE 40/CUL DE SAC)
08/13/2024	0.34	Sweeping Program #35	1ST DIST	SKIPJACK COURT [1](SEARAY COURT/CUL DE
08/13/2024	0.14	Sweeping Program #35	1ST DIST	MAINSHIP WAY [1](SEARAY COURT/VIKING C(
08/13/2024	1.12	Sweeping Program #35	1ST DIST	LONGLEY RD (W) [1](LONG BAR HARBOR RD/
08/13/2024	0.18	Sweeping Program #35	1ST DIST	VIKING COURT (E) [1](MAINSHIP WAY/CUL DE
08/13/2024	0.20	Sweeping Program #35	1ST DIST	VIKING COURT (W) [1](MAINSHIP WAY/CUL DI
08/13/2024	0.10	Sweeping Program #35	1ST DIST	ST SEBASTIAN CT [1](FRANS DR (S)/CUL DE S/
08/13/2024	0.12	Sweeping Program #35	1ST DIST	ST ALBANS CT [1](LONGLEY RD/CUL DE SAC)
08/13/2024	0.22	Sweeping Program #35	1ST DIST	ANGEL DR [1](FRANS DR (N)/T TURN AROUND
08/13/2024	1.00	Sweeping Program #35	1ST DIST	LONG BAR HARBOR RD [1](RT 40/EAST BAKEI
08/13/2024	1.54	Sweeping Program #35	1ST DIST	SPESUTIA RD [1](RT 40/RT 159)
08/20/2024	0.26	Sweeping Program #35	1ST DIST	MEADOWCREST CT [1](STOCKHAMS LA/CUL I
08/20/2024	0.78	Sweeping Program #35	1ST DIST	POPLAR GROVE AVE [1](PARK BEACH DR/PINI
08/20/2024	0.28	Sweeping Program #35	1ST DIST	CHURCH POINT CT [1](POPLAR GROVE AVE/CI
08/20/2024	1.04	Sweeping Program #35	1ST DIST	CLUB HOUSE RD [1](RT 159/PARK BEACH DR)
08/20/2024	0.50	Sweeping Program #35	1ST DIST	GABLER'S SHORE COURT(MARINA AVENUE/CU
08/20/2024	0.32	Sweeping Program #35	1ST DIST	HOLLY AVENUE [1](PINE AVENUE/MITCHELL I
08/20/2024	0.32	Sweeping Program #35	1ST DIST	PINE AVENUE [1](POPLAR GROVE AVE/OAKDA
08/20/2024	0.50	Sweeping Program #35	1ST DIST	MARINA AVENUE(RT. 159/BACK TO RT. 159 (CII
08/20/2024	0.50	Sweeping Program #35	1ST DIST	GULF DR [1](CLUB HOUSE RD/ROAD CLOSED)
08/21/2024	3.75	Sweeping Program #35	1ST DIST	JOPPA FARM RD [1](FT HOYLE RD/CLIPPER RD
08/22/2024	0.96	Sweeping Program #35	1ST DIST	ANCHOR DR [1](BRIDGE DR/SHORE DR)
08/22/2024	0.16	Sweeping Program #35	1ST DIST	BEACON POINT CT [1](SHORE DR/CUL DE SAC)
08/22/2024	0.80	Sweeping Program #35	1ST DIST	BRIDGE DR [1](ANCHOR DR/TOWNE CENTER I
08/22/2024	0.25	Sweeping Program #35	1ST DIST	DRIFTWOOD CT [1](SHORE DR/CUL DE SAC)
08/22/2024	0.26	Sweeping Program #35	1ST DIST	BREAKWATER CT [1](SHORE DR/CUL DE SAC)
08/22/2024	0.06	Sweeping Program #35	1ST DIST	DREW CT [1](DONCASTER RD/CUL DE SAC)
08/22/2024	1.06	Sweeping Program #35	1ST DIST	DONCASTER RD [1](JOPPA FARM RD/DURYEA
08/22/2024	0.06	Sweeping Program #35	1ST DIST	DALLAS CT [1](DONCASTER RD/CUL DE SAC)
08/22/2024	0.06	Sweeping Program #35	1ST DIST	MONTEREY CT [1](OLD SOUND DR/CUL DE SA
08/22/2024	0.12	Sweeping Program #35	1ST DIST	OLD CHURCH DR [1](COURT RD/NEPTUNE DR
08/22/2024	0.74	Sweeping Program #35	1ST DIST	OLD SOUND RD [1](NEPTUNE DR/BRIDGE DR)
08/22/2024	0.92	Sweeping Program #35	1ST DIST	NEPTUNE DR [1](ANCHOR DR/NEPTUNE DR)
08/22/2024	0.26	Sweeping Program #35	1ST DIST	RAVENSWOOD CT [1](SHORE DR/CUL DE SAC)
08/22/2024	0.24	Sweeping Program #35	1ST DIST	SHELL COVE CT [1](SHORE DR/CUL DE SAC)
08/22/2024	0.10	Sweeping Program #35	1ST DIST	STONE HARBOR CT [1](SHORE DR/CUL DE SA(
08/22/2024	2.80	Sweeping Program #35	1ST DIST	TOWNE CENTER DR [1](JOPPA FARM RD/SHOR

08/23/2024	1.00	Sweeping Program #35	1ST DIST	HANSON RD [1](PERRY AVE/RT 152)
08/23/2024	0.25	Sweeping Program #35	1ST DIST	FERN ST [1](HANSON RD/END CO MAINT)
08/23/2024	0.70	Sweeping Program #35	1ST DIST	ACADIA DR [1](FOSTER KNOLL DR/HAVERHIL
08/23/2024	2.16	Sweeping Program #35	1ST DIST	HAVERHILL RD [1](TRIMBLE RD/END OF MAI
08/23/2024	0.12	Sweeping Program #35	1ST DIST	WYCLIFF CT [1](ACADIA RD/CUL DE SAC)
08/23/2024	0.12	Sweeping Program #35	1ST DIST	TANGLEWOOD CT [1](FOSTER KNOLL DR/CUL
08/23/2024	0.50	Sweeping Program #35	1ST DIST	TRAILS WAY(FOSTER KNOLL DRIVE/CDS / ISL/
08/23/2024	0.28	Sweeping Program #35	1ST DIST	SWEETBRIAR COURT [1](FOSTER KNOLL DRI
08/23/2024	0.12	Sweeping Program #35	1ST DIST	BELFAST CT [1](SPRINGDALE CT/CUL DE SAC)
08/23/2024	0.12	Sweeping Program #35	1ST DIST	ROSECREST CT [1](FOSTER KNOLL DR/CUL DI
08/23/2024	0.24	Sweeping Program #35	1ST DIST	SPRINGDALE CT [1](FOSTER KNOLL DR/CUL D
08/23/2024	0.24	Sweeping Program #35	1ST DIST	TARTAN GREEN CT [1](FOSTER KNOLL DR/CU
08/23/2024	0.42	Sweeping Program #35	1ST DIST	RIPPLEWOOD RD [1](HAVERHILL RD/STILLME
08/23/2024	0.20	Sweeping Program #35	1ST DIST	SHEFFIELD CT [1](RIPPLEWOOD RD/CUL DE S.
08/23/2024	0.18	Sweeping Program #35	1ST DIST	SUMMERFIELD CT [1](RIPPLEWOOD RD/CUL D
08/23/2024	0.22	Sweeping Program #35	1ST DIST	BERKSHIRE CT [1](HAVERHILL RD/CUL DE SAC
08/23/2024	0.04	Sweeping Program #35	1ST DIST	CUTLER CT [1](TARTAN GREEN CT/CUL DE SA
08/23/2024	0.24	Sweeping Program #35	1ST DIST	AVEDON CT [1](STILLMEADOW DR/CUL DE SA
08/23/2024	0.88	Sweeping Program #35	1ST DIST	STILLMEADOW DR [1](JOPPA FARM RD/HAVEI
08/23/2024	0.46	Sweeping Program #35	1ST DIST	ROXBURY CT [1](STILLMEADOW DR/CUL DE S
08/23/2024	0.40	Sweeping Program #35	1ST DIST	BLACKBURN CT [1](STILLMEADOW DR/CUL D
08/27/2024	0.04	Sweeping Program #35	1ST DIST	ECKHART CT [1](ECKHART DR/CUL DE SAC)
08/27/2024	0.62	Sweeping Program #35	1ST DIST	ECKHART DR [1](EMMERICK DR/ENSOR DR)
08/27/2024	0.10	Sweeping Program #35	1ST DIST	ECHOLS CT [1](ECKHART DR/CUL DE SAC)
08/27/2024	0.04	Sweeping Program #35	1ST DIST	EDELIN RD [1](ERWIN DR/DEAD END)
08/27/2024	0.60	Sweeping Program #35	1ST DIST	EMMERICK DR [1](TRIMBLE RD/ENFIELD RD)
08/27/2024	0.08	Sweeping Program #35	1ST DIST	ERICKSON CT [1](ECKHART DR/CUL DE SAC)
08/27/2024	0.08	Sweeping Program #35	1ST DIST	ENSOR CT [1](ENSOR DR/CUL DE SAC)
08/27/2024	0.72	Sweeping Program #35	1ST DIST	ENSOR DR [1](ERWIN DR/ENFIELD RD)
08/27/2024	1.68	Sweeping Program #35	1ST DIST	ENFIELD RD [1](RT 40/CUL DE SAC)
08/27/2024	0.70	Sweeping Program #35	1ST DIST	ERWIN DR [1](TRIMBLE RD/ENFIELD RD)
08/27/2024	0.10	Sweeping Program #35	1ST DIST	AVERY CT [1](AVERILL RD/CUL DE SAC)
08/27/2024	0.32	Sweeping Program #35	1ST DIST	AVERILL RD [1](TRIMBLE RD/BARKSDALE RD)
08/27/2024	0.18	Sweeping Program #35	1ST DIST	ADAIR CT [1](AVERILL RD/END CO MAINT)
08/27/2024	0.48	Sweeping Program #35	1ST DIST	JOPPA CROSSING CT [1](ENFIELD RD/CUL DE S
08/27/2024	0.44	Sweeping Program #35	1ST DIST	JOPPA CROSSING WAY [1](ENFIELD RD/JOPPA (
08/27/2024	0.36	Sweeping Program #35	1ST DIST	MARINER RD [1](TRIMBLE RD/ENFIELD RD)
08/27/2024	0.16	Sweeping Program #35	1ST DIST	STONE CT [1](ENFIELD RD/CUL DE SAC)
08/27/2024	0.26	Sweeping Program #35	1ST DIST	BROOKE CT [1](MAGNOLIA RIDGE/CUL DE SAC
08/27/2024	0.50	Sweeping Program #35	1ST DIST	FALCONBRIDGE DR [1](TRIMBLE RD/TRIMBLI
08/27/2024	0.34	Sweeping Program #35	1ST DIST	MAGNOLIA RIDGE DR [1](TRIMBLE RD/DEAD
08/27/2024	0.36	Sweeping Program #35	1ST DIST	WOODMONT CT [1](MAGNOLIA RIDGE/CUL DI
08/28/2024	1.12	Sweeping Program #35	1ST DIST	BARKSDALE RD [1](JOPPA FARM RD/BALDWIN
08/28/2024	0.46	Sweeping Program #35	1ST DIST	BRADLEY RD [1](BRESLIN RD/BARKSDALE RD
08/28/2024	0.10	Sweeping Program #35	1ST DIST	BARTLETT CT [1](BONHAM RD/CUL DE SAC)
08/28/2024	0.32	Sweeping Program #35	1ST DIST	BONHAM RD [1](BARKSDALE RD/BRADLEY RI
08/28/2024	0.06	Sweeping Program #35	1ST DIST	BRAXTON CT [1](BRADLEY RD/CUL DE SAC)



Public Works - Bureau of Highways

Work Order Master Report

08/28/2024	0.68	Sweeping Program #35	1ST DIST	BRESLIN RD [1](JOPPA FARM RD/BARKSDALE I
08/28/2024	0.54	Sweeping Program #35	1ST DIST	CHATFIELD RD [1](BARKSDALE RD/BRESLIN I
08/28/2024	0.22	Sweeping Program #35	1ST DIST	CONTEE RD [1](CHATFIELD RD/CUL DE SAC)
08/28/2024	0.32	Sweeping Program #35	1ST DIST	BALDWIN DRIVE [1](BARKSDALE RD/CDS TO (
08/28/2024	0.20	Sweeping Program #35	1ST DIST	JONATHAN DRIVE [1](FALCONER ROAD/BALD'
08/28/2024	1.96	Sweeping Program #35	1ST DIST	FALCONER RD [1](DURYEA DR/JOPPA FARM RI
08/28/2024	0.78	Sweeping Program #35	1ST DIST	MACINTOSH CIRCLE [1](FALCONER ROAD/FAI
08/28/2024	0.28	Sweeping Program #35	1ST DIST	SOURGHUM COURT [1](FALCONER RD/CUL-DI
08/28/2024	0.16	Sweeping Program #35	1ST DIST	WINESAP COURT [1](FALCONER RD/CUL DE S/
08/29/2024	0.46	Sweeping Program #35	1ST DIST	DURYEA DR [1](JOPPA FARM RD/DEAD END)
08/29/2024	1.06	Sweeping Program #35	1ST DIST	DONCASTER RD [1](JOPPA FARM RD/DURYEA
08/29/2024	0.06	Sweeping Program #35	1ST DIST	DALLAS CT [1](DONCASTER RD/CUL DE SAC)
08/29/2024	0.06	Sweeping Program #35	1ST DIST	DREW CT [1](DONCASTER RD/CUL DE SAC)
08/29/2024	0.64	Sweeping Program #35	1ST DIST	CHELL RD [1](DONCASTER RD/DONCASTER R
08/29/2024	0.06	Sweeping Program #35	1ST DIST	CURRY CT [1](CHELL RD/CUL DE SAC)
08/29/2024	1.96	Sweeping Program #35	1ST DIST	FALCONER RD [1](DURYEA DR/JOPPA FARM RI
08/29/2024	0.32	Sweeping Program #35	1ST DIST	FITZHUGH RD [1](JOPPA FARM RD/FALCONER
08/29/2024	0.76	Sweeping Program #35	1ST DIST	FERGUSON RD [1](FALCONER RD/DURYEA DR
08/29/2024	0.36	Sweeping Program #35	1ST DIST	FOXWELL RD [1](FITZHUGH RD/FERGUSON RI
08/29/2024	0.06	Sweeping Program #35	1ST DIST	FRAZIER CT [1](FERGUSON RD/CUL DE SAC)
08/29/2024	0.10	Sweeping Program #35	1ST DIST	FUNSTEN CT [1](FALCONER RD/CUL DE SAC)
09/03/2024	1.00	Sweeping Program #35	1ST DIST	EASTFIELDS WAY [1](TRIMBLE FIELDS DR/SOU
09/03/2024	0.46	Sweeping Program #35	1ST DIST	FULFILLMENT DR [1](TRIMBLE RD/CUL DE SA
09/03/2024	0.40	Sweeping Program #35	1ST DIST	GRAYMOUNT WAY [1](TURQUOISE CIRCLE/CI
09/03/2024	0.32	Sweeping Program #35	1ST DIST	OLD NUTTAL AVE [1](NUTTAL AVE (W)/NUTTA
09/03/2024	1.26	Sweeping Program #35	1ST DIST	NUTTAL AVE (E) [1](RT 755/DEAD END)
09/03/2024	0.14	Sweeping Program #35	1ST DIST	NORTHFIELDS COURT [1](EASTFIELDS WAY/C
09/03/2024	0.24	Sweeping Program #35	1ST DIST	SEVERN WAY [1](TRIMBLE ROAD/SEVERN WA
09/03/2024	0.26	Sweeping Program #35	1ST DIST	SKY BLUE CT [1](NUTTAL AVE (W)/CUL DE SA(
09/03/2024	0.56	Sweeping Program #35	1ST DIST	SOUTHRIDGE DR [1](TRIMBLE RD/CUL DE SA(
09/03/2024	0.46	Sweeping Program #35	1ST DIST	TRIMBLE FIELDS DRIVE [1](TRIMBLE ROAD/C
09/03/2024	5.84	Sweeping Program #35	1ST DIST	TRIMBLE RD (W) [1](JOPPA RD/JOPPA FARM RI
09/04/2024	0.20	Sweeping Program #35	1ST DIST	BROWN ST [1](WEBSTER ST/STARR ST)
09/04/2024	0.34	Sweeping Program #35	1ST DIST	ARMSTRONG ST [1](MC CANN ST/BROWN ST)
09/04/2024	0.06	Sweeping Program #35	1ST DIST	GODDARD ST [1](ARMSTRONG ST/YAHOE ST)
09/04/2024	0.20	Sweeping Program #35	1ST DIST	MORGAN ST [1](STARR ST/WEBSTER ST)
09/04/2024	1.26	Sweeping Program #35	1ST DIST	NUTTAL AVE (E) [1](RT 755/DEAD END)
09/04/2024	0.60	Sweeping Program #35	1ST DIST	MCCANN ST [1](TRIMBLE RD/NUTTAL AVE (E)
09/04/2024	0.30	Sweeping Program #35	1ST DIST	ROCKWELL ST [1](WEBSTER ST/STARR ST)
09/04/2024	0.34	Sweeping Program #35	1ST DIST	STARR ST [1](MC CANN ST/ROCKWELL ST)
09/04/2024	1.88	Sweeping Program #35	1ST DIST	TRIMBLE RD (W) [1](JOPPA RD/JOPPA FARM RI
09/04/2024	2.20	Sweeping Program #35	1ST DIST	TRIMBLE RD (C) [1](GARNETT RD/JOPPA RD)
09/04/2024	0.18	Sweeping Program #35	1ST DIST	WEBSTER RD [3](RT 462/DEAD END)
09/05/2024	1.80	Sweeping Program #35	1ST DIST	BROADNECK CROSSING RD [1](WILLOUGHBY
09/05/2024	0.12	Sweeping Program #35	1ST DIST	BAGNELL COURT [1](BROADNECK CROSSING
09/05/2024	0.28	Sweeping Program #35	1ST DIST	BAGNELL ROAD [1](BROADNECK CROSSING R
09/05/2024	0.32	Sweeping Program #35	1ST DIST	BEAVER CROSSING ROAD [1](BROADNECK CR

09/05/2024	0.10	Sweeping Program #35	1ST DIST	BOURNE WAY [1](BROADNECK CROSSING WA
09/05/2024	0.14	Sweeping Program #35	1ST DIST	CANOE LANE [1](INDIANS LAIR/CUL DE SAC)
09/05/2024	0.12	Sweeping Program #35	1ST DIST	CROWN CI [1](BROADNECK CROSSING RD/BR
09/05/2024	0.24	Sweeping Program #35	1ST DIST	INDIAN'S LAIR [1](BROADNECK CROSSING RD
09/05/2024	0.14	Sweeping Program #35	1ST DIST	KEALE WAY [1](BROADNECK CROSSING RD/C
09/05/2024	0.08	Sweeping Program #35	1ST DIST	KING JAMES CI [1](BROADNECK CROSSING RI
09/05/2024	0.20	Sweeping Program #35	1ST DIST	MAJESTY LN [1](BROADNECK CROSSING RD/(
09/05/2024	0.22	Sweeping Program #35	1ST DIST	MAIDENS LANE [1](BROADNECK CROSSING R
09/05/2024	0.78	Sweeping Program #35	1ST DIST	OAK ST [1](WILLOUGHBY BEACH RD/T TURN
09/05/2024	0.36	Sweeping Program #35	1ST DIST	PINE ST [1](RT 755/DEAD END)
09/05/2024	3.25	Sweeping Program #35	1ST DIST	WILLOUGHBY BEACH RD [1](TRIMBLE RD/KE
09/09/2024	4.00	Sweeping Program #35	1ST DIST	WILLOUGHBY BEACH RD [1](TRIMBLE RD/KE
09/09/2024	0.12	Sweeping Program #35	1ST DIST	YOST COURT [1](AHERN DRIVER/CUL DE SAC
09/09/2024	0.74	Sweeping Program #35	1ST DIST	AHERN DRIVE [1](WILLOUGHBY BEACH ROAI
09/09/2024	0.34	Sweeping Program #35	1ST DIST	ANCON COURT [1](AHERN DRIVE/CUL DE SAC
09/09/2024	0.18	Sweeping Program #35	1ST DIST	CAPTAINS COVE COURT [1](WILLOUGHBYS W
09/09/2024	0.50	Sweeping Program #35	1ST DIST	LORD WILLOUGHBY WAY [1](WILLOUGHBY B
09/09/2024	0.40	Sweeping Program #35	1ST DIST	MAHONIA WAY [1](REDBUD RD/SIWANOY DR)
09/09/2024	0.36	Sweeping Program #35	1ST DIST	PROFITT PATH [1](WILLOUGHBYS WAY/CUL D
09/09/2024	1.02	Sweeping Program #35	1ST DIST	SIWANOY DRIVE [1](AHERN DRIVE/CUL DE SA
09/09/2024	0.24	Sweeping Program #35	1ST DIST	TODKILL TRACE [1](WILLOUGHBYS WAY/CUI
09/10/2024	0.50	Sweeping Program #35	1ST DIST	HARBOUR OAK DR [1](WILLOUGHBY BEACH
09/10/2024	0.90	Sweeping Program #35	1ST DIST	SOUNDING DR [1](EBBTIDE DR/TTA TO TTA)
09/10/2024	0.10	Sweeping Program #35	1ST DIST	BUOY CT [1](EBBTIDE DR/CUL DE SAC)
09/10/2024	0.10	Sweeping Program #35	1ST DIST	TRADEWINDS CT [1](EBBTIDE CT/CUL DE SAC
09/10/2024	0.90	Sweeping Program #35	1ST DIST	DEEPWATER WAY [1](HARBOUR OAKS DR/EBI
09/10/2024	0.26	Sweeping Program #35	1ST DIST	SHELTER COVE ST [1](DEEP WATER WAY/EBB
09/10/2024	0.22	Sweeping Program #35	1ST DIST	PIER DR [1](SOUNDING DR/DEEPWATER WAY)
09/10/2024	0.46	Sweeping Program #35	1ST DIST	HAVEN PLACE [1](PIER DR/SOUNDING DR)
09/10/2024	0.50	Sweeping Program #35	1ST DIST	FREYS ROAD [1](END OF BT/DEAD END)
09/10/2024	1.58	Sweeping Program #35	1ST DIST	EBBTIDE DR [1](SOUNDING DR/SOUNDING DI
09/10/2024	0.48	Sweeping Program #35	1ST DIST	OTTER CREEK ROAD [1](FREYS ROAD/CUL DI
09/10/2024	0.26	Sweeping Program #35	1ST DIST	CASPIAN COURT [1](OTTER CREEK ROAD/CUI
09/10/2024	0.26	Sweeping Program #35	1ST DIST	KINGFISHER ROAD [1](FREYS ROAD/CASPIAN
09/10/2024	0.12	Sweeping Program #35	1ST DIST	PINTAIL COURT [1](OTTER CREEK ROAD/CUL
09/10/2024	0.10	Sweeping Program #35	1ST DIST	GOLDENEYE COURT [1](OTTER CREEK ROAD/
09/10/2024	0.14	Sweeping Program #35	1ST DIST	BLUE HERON COURT [1](KINGFISHER RD/CUL
09/10/2024	0.20	Sweeping Program #35	1ST DIST	BLACKBIRD COURT [1](KINGFISHER RD/CUL I
09/10/2024	0.20	Sweeping Program #35	1ST DIST	RIVERSHORE CT [1](FREY'S RD/CUL DE SAC)
09/10/2024	0.20	Sweeping Program #35	1ST DIST	SUGARBERRY COURT [1](SILVERSIDE ROAD/C
09/10/2024	0.66	Sweeping Program #35	1ST DIST	SILVERSIDE RD [1](WILLOUGHBY BEACH RD/
09/10/2024	0.20	Sweeping Program #35	1ST DIST	MOLLY COURT [1](SILVERSIDE RD/CUL-DE-SA
09/10/2024	0.22	Sweeping Program #35	1ST DIST	ARUM CT [1](SILVERSIDE RD/CUL DE SAC)
09/10/2024	0.16	Sweeping Program #35	1ST DIST	ORCHID CT [1](SILVERSIDE RD/CUL DE SAC)
09/10/2024	0.10	Sweeping Program #35	1ST DIST	BLUEBERRY CT [1](SILVERSIDE RD/CUL DE SA
09/11/2024	2.25	Sweeping Program #35	1ST DIST	WILLOUGHBY BEACH RD [1](TRIMBLE RD/KE
09/11/2024	1.02	Sweeping Program #35	1ST DIST	ALBANTOWNE WAY [1](WILLOUGHBY BEACH



Public Works - Bureau of Highways

Work Order Master Report

09/11/2024	0.10	Sweeping Program #35	1ST DIST	IRIS DR [1](LABURNUM RD/WINTERBERRY DF
09/11/2024	0.10	Sweeping Program #35	1ST DIST	LILAC CT [1](WINTERBERRY DR/CUL DE SAC)
09/11/2024	1.22	Sweeping Program #35	1ST DIST	LABURNUM RD [1](WILLOUGHBY BEACH RD/
09/11/2024	0.40	Sweeping Program #35	1ST DIST	MAHONIA WAY [1](REDBUD RD/SIWANOY DR)
09/11/2024	0.60	Sweeping Program #35	1ST DIST	PALMETTO DR [1](REDBUD RD/REDBUD RD)
09/11/2024	0.72	Sweeping Program #35	1ST DIST	REDBUD RD [1](SWEETBAY DR/LABURNUM R
09/11/2024	0.24	Sweeping Program #35	1ST DIST	SEABROOK CT [1](ALBANTOWNE WAY/CUL D
09/11/2024	0.22	Sweeping Program #35	1ST DIST	SWEETBAY DR [1](WILLOUGHBY BEACH RD/I
09/11/2024	1.22	Sweeping Program #35	1ST DIST	WINTERBERRY DR [1](LABURNUM RD/WINTE
09/11/2024	0.08	Sweeping Program #35	1ST DIST	LASONIA CT [1](ALBANTOWNE WAY/CUL DE S
09/11/2024	0.20	Sweeping Program #35	1ST DIST	LANSDOWNE CT [1](ALBANTOWNE WAY/CUL
09/11/2024	0.38	Sweeping Program #35	1ST DIST	LOVE AVE [1](CRESTWOOD DR/KENNARD AVE
09/11/2024	0.08	Sweeping Program #35	1ST DIST	LOVE CT [1](LOVE AVE/CUL DE SAC)
09/11/2024	0.06	Sweeping Program #35	1ST DIST	CRESTWOOD CT [1](CRESTWOOD DR/DEAD EN
09/11/2024	0.46	Sweeping Program #35	1ST DIST	CRESTWOOD DR [1](WALTERS RD/FLYING POI
09/12/2024	0.72	Sweeping Program #35	1ST DIST	THORNBERRY DR [1](SEQUOIA DR/SEQUOIA D
09/12/2024	0.42	Sweeping Program #35	1ST DIST	HARTWOOD LA [1](THORNBERRY DR/SEQUOI.
09/12/2024	0.08	Sweeping Program #35	1ST DIST	BUTTERNUT CT [1](HARTWOOD LA/CUL DE S.
09/12/2024	0.08	Sweeping Program #35	1ST DIST	BURLWOOD CT [1](HARTWOOD LA/CUL DE SA
09/12/2024	0.08	Sweeping Program #35	1ST DIST	ARBOR CT [1](THORNBERRY DR/CUL DE SAC)
09/12/2024	1.10	Sweeping Program #35	1ST DIST	SEQUOIA DR [1](WILLOUGHBY BEACH RD/SE(
09/12/2024	0.44	Sweeping Program #35	1ST DIST	SYCAMORE LA [1](PAPAYA RD/GREENHEART I
09/16/2024	1.10	Sweeping Program #35	1ST DIST	BAYBERRY RD [1](HANSON RD (N&S)/RT 755)
09/16/2024	0.06	Sweeping Program #35	1ST DIST	CHERRY CT [1](HANSON RD/CUL DE SAC)
09/16/2024	0.44	Sweeping Program #35	1ST DIST	CHERRY RD [1](HANSON RD/TUPELO RD)
09/16/2024	0.14	Sweeping Program #35	1ST DIST	CHERRY PL [1](TUPELO RD/CUL DE SAC)
09/16/2024	0.75	Sweeping Program #35	1ST DIST	HAREWOOD RD [1](BAYBERRY RD/DEAD END
09/16/2024	0.08	Sweeping Program #35	1ST DIST	HAREWOOD CT [1](HAREWOOD RD/CUL DE S.
09/16/2024	0.32	Sweeping Program #35	1ST DIST	HAWTHORNE RD [1](HAREWOOD RD/HAREW(
09/16/2024	0.18	Sweeping Program #35	1ST DIST	HEMLOCK RD [1](BAYBERRY RD/HAREWOOD
09/16/2024	0.12	Sweeping Program #35	1ST DIST	FERN ST [1](HANSON RD/END CO MAINT)
09/16/2024	1.75	Sweeping Program #35	1ST DIST	HANSON RD [1](PERRY AVE/RT 152)
09/16/2024	0.34	Sweeping Program #35	1ST DIST	TUPELO RD [1](BAYBERRY RD/CUL DE SAC)
09/16/2024	0.12	Sweeping Program #35	1ST DIST	TULIP CT [1](JUNIPER RD/CUL DE SAC)
09/16/2024	0.36	Sweeping Program #35	1ST DIST	JUNIPER RD [1](TUPELO RD/BAYBERRY RD)
09/20/2024	0.12	Sweeping Program #35	1ST DIST	TULIP CT [1](JUNIPER RD/CUL DE SAC)
09/20/2024	0.08	Sweeping Program #35	1ST DIST	LARCH CT [1](LARCH DR/CUL DE SAC)
09/20/2024	0.44	Sweeping Program #35	1ST DIST	LARCH DR [1](HANSON RD/BOXELDER DR)
09/20/2024	0.74	Sweeping Program #35	1ST DIST	BOXELDER DR [1](HANSON RD/T TURN AROU
09/20/2024	0.08	Sweeping Program #35	1ST DIST	MANDARIN CT [1](BOXELDER DR/CUL DE SAC
09/20/2024	0.24	Sweeping Program #35	1ST DIST	WINGLEAF CT [1](BOXELDER DR/CUL DE SAC
09/20/2024	0.14	Sweeping Program #35	1ST DIST	BELLFLOWER CT [1](BOXELDER DR/CUL DE S.
09/20/2024	1.00	Sweeping Program #35	1ST DIST	HANSON RD [1](PERRY AVE/RT 152)
09/20/2024	0.68	Sweeping Program #35	1ST DIST	MEADOWOOD DR [1](HANSON RD/END MAIN
09/20/2024	0.24	Sweeping Program #35	1ST DIST	CANDLEWOOD DR [1](MEADOWOOD DR/DEA.
09/20/2024	1.36	Sweeping Program #35	1ST DIST	HARFORD SQUARE DR [1](HANSON RD/HANS(
09/20/2024	0.50	Sweeping Program #35	1ST DIST	CHARLESTOWN DR [1](HARFORD SQUARE DR

09/20/2024	1.60	Sweeping Program #35	1ST DIST	WOODBRIDGE CENTER WAY [1](RT 40/HANSO
09/20/2024	0.16	Sweeping Program #35	1ST DIST	ENTRANCE WAY [1](WOODBRIDGE STATION V
09/20/2024	0.62	Sweeping Program #35	1ST DIST	WOODBRIDGE STATION WAY [1](WOODBRIDG
09/20/2024	1.00	Sweeping Program #35	1ST DIST	BUSINESS CENTER WAY [1](ROUTE 40/ROUTE
09/23/2024	0.16	Sweeping Program #35	1ST DIST	RAINBOW CT (N) [1](RAINBOW WAY/CUL DE S
09/23/2024	0.16	Sweeping Program #35	1ST DIST	RAINBOW CT (S) [1](RAINBOW WAY/CUL DE S
09/23/2024	0.14	Sweeping Program #35	1ST DIST	RAINBOW WAY [1](WOODBRIDGE CENTER WA
09/23/2024	1.60	Sweeping Program #35	1ST DIST	WOODBRIDGE CENTER WAY [1](RT 40/HANSO
09/23/2024	0.14	Sweeping Program #35	1ST DIST	CLOVER VALLEY CT (N) [1](CLOVER VALLEY
09/23/2024	0.12	Sweeping Program #35	1ST DIST	CLOVER VALLEY CT (S) [1](CLOVER VALLEY V
09/23/2024	1.46	Sweeping Program #35	1ST DIST	CLOVER VALLEY WAY [1](WOODBRIDGE CENT
09/23/2024	0.80	Sweeping Program #35	1ST DIST	WINDY BRANCH WAY [1](RT 152/WOODBRIDG
09/23/2024	0.14	Sweeping Program #35	1ST DIST	LILY POND CT [1](CLOVER VALLEY WAY/CUL
09/23/2024	0.16	Sweeping Program #35	1ST DIST	DOGWOOD DELL CT [1](CLOVER VALLEY WAY
09/23/2024	0.40	Sweeping Program #35	1ST DIST	PINEFIELD WAY [1](HANSON RD/WINDY BRAN
09/23/2024	0.06	Sweeping Program #35	1ST DIST	RAINBOW GARDEN CT [1](WINDY BRANCH W
09/23/2024	0.16	Sweeping Program #35	1ST DIST	CEDAR CREST CT [1](WINDY BRANCH WAY/CU
09/23/2024	0.12	Sweeping Program #35	1ST DIST	APPLE ORCHARD CT [1](WINDY BRANCH WAY
09/23/2024	1.62	Sweeping Program #35	1ST DIST	BROOKSIDE DR [1](WATERGATE DR/GILWAY C
09/23/2024	1.12	Sweeping Program #35	1ST DIST	EDGEWATER DR [1](WATERGATE CT/DEAD EN
09/23/2024	0.36	Sweeping Program #35	1ST DIST	TREE TOP DR [1](RT 40/BROOKSIDE DR)
09/23/2024	0.36	Sweeping Program #35	1ST DIST	GATEWAY RD [1](RT 40/BROOKSIDE DR)
09/24/2024	0.06	Sweeping Program #35	1ST DIST	ANTONY CT [1](HARBINGER TRAIL/CUL DE SA
09/24/2024	1.26	Sweeping Program #35	1ST DIST	HARBINGER TRAIL [1](EDGEWATER DR/EDGEV
09/24/2024	0.16	Sweeping Program #35	1ST DIST	HORSESHOE LA W [1](TOP VIEW DR/DEAD EN
09/24/2024	0.18	Sweeping Program #35	1ST DIST	ERMINE CT [1](HARBINGER TRAIL/CUL DE SA
09/24/2024	1.10	Sweeping Program #35	1ST DIST	EDGEWATER DR [1](WATERGATE CT/DEAD EN
09/24/2024	0.28	Sweeping Program #35	1ST DIST	FISHERMAN LA [1](EDGEWATER DR/HARBING
09/24/2024	0.38	Sweeping Program #35	1ST DIST	GATEWAY RD [1](RT 40/BROOKSIDE DR)
09/24/2024	0.06	Sweeping Program #35	1ST DIST	MELODY CT [1](HARBINGER TRAIL/CUL DE SA
09/24/2024	0.04	Sweeping Program #35	1ST DIST	MALLARD CT [1](HARBINGER TRAIL/CUL DE S
09/24/2024	0.44	Sweeping Program #35	1ST DIST	TOP VIEW DR [1](BROOKSIDE DR/EDGEWATEI
09/24/2024	0.36	Sweeping Program #35	1ST DIST	TREE TOP DR [1](RT 40/BROOKSIDE DR)
09/24/2024	0.58	Sweeping Program #35	1ST DIST	SWALLOW CREST DR [1](WOODBRIDGE CENT
09/24/2024	0.06	Sweeping Program #35	1ST DIST	SAILBOAT CT [1](HARBINGER TRAIL/CUL DE S
09/24/2024	0.08	Sweeping Program #35	1ST DIST	SERENITY CT [1](HARBINGER TRAIL/CUL DE S
09/24/2024	0.08	Sweeping Program #35	1ST DIST	WATERFOWL CT [1](ERMINE CT/CUL DE SAC)
09/24/2024	0.34	Sweeping Program #35	1ST DIST	WATERGATE CT [1](EDGEWATER DR/CUL DE S
09/25/2024	0.68	Sweeping Program #35	1ST DIST	BECKON DR [1](WEST SHORE DR/LAKE FRON
09/25/2024	0.16	Sweeping Program #35	1ST DIST	AHOY CT [1](WEST SHORE DR/WEST SHORE I
09/25/2024	0.90	Sweeping Program #35	1ST DIST	ABINGDON BEACH RD [1](OTTER POINT RD/T
09/25/2024	0.46	Sweeping Program #35	1ST DIST	HARFORD BOAT CLUB RD [1](OTTER POINT R
09/25/2024	0.30	Sweeping Program #35	1ST DIST	LAKE FRONT DR [1](BECKON DR/WILLOW BE
09/25/2024	0.44	Sweeping Program #35	1ST DIST	LEIGHT RD [1](OTTER POINT RD/T TURN ARO
09/25/2024	0.14	Sweeping Program #35	1ST DIST	MAINSHIP WAY [1](SEARAY COURT/VIKING C
09/25/2024	0.52	Sweeping Program #35	1ST DIST	PIRATES CT [1](BECKON DR/END MAINT - NEV
09/25/2024	0.64	Sweeping Program #35	1ST DIST	SEARAY COURT [1](ROUTE 40/CUL DE SAC)

Public Works - Bureau of Highways

Work Order Master Report

09/25/2024	0.34	Sweeping Program #35	1ST DIST	SKIPJACK COURT [1](SEARAY COURT/CUL DE
09/30/2024	0.08	Sweeping Program #35	1ST DIST	ALDERSHOT CT [1](SHREWSBURY RD/CUL DE
09/30/2024	0.08	Sweeping Program #35	1ST DIST	CAMBERLEY CT [1](SHREWSBURY RD/CUL DE
09/30/2024	0.22	Sweeping Program #35	1ST DIST	CHELMSFORD CT [1](TEWKESBURY RD/CUL D
09/30/2024	0.16	Sweeping Program #35	1ST DIST	COTSWOLD CT [1](TEWKESBURY RD/CUL DE
09/30/2024	0.38	Sweeping Program #35	1ST DIST	COKESBURY RD [1](RT 7/ABINGDON RD)
09/30/2024	0.08	Sweeping Program #35	1ST DIST	CULLODEN CT [1](TEWKESBURY RD/CUL DE S
09/30/2024	0.16	Sweeping Program #35	1ST DIST	HATFIELD CT [1](SHREWSBURY RD/CUL DE SA
09/30/2024	0.08	Sweeping Program #35	1ST DIST	LETCHWORTH CT [1](SHREWSBURY RD/CUL D
09/30/2024	0.06	Sweeping Program #35	1ST DIST	LEEDS CT [1](SHREWSBURY RD/CUL DE SAC)
09/30/2024	0.06	Sweeping Program #35	1ST DIST	NORWICH CT [1](TEWKESBURY RD/CUL DE SA
09/30/2024	0.08	Sweeping Program #35	1ST DIST	PENSHURST CT [1](SHREWSBURY RD/CUL DE
09/30/2024	0.18	Sweeping Program #35	1ST DIST	PORTSMOUTH CT [1](SHREWSBURY RD/CUL D
09/30/2024	2.02	Sweeping Program #35	1ST DIST	SHREWSBURY RD [1](ABINGDON RD/COKESB
09/30/2024	0.16	Sweeping Program #35	1ST DIST	SKYLARK COURT(SEWELL ROAD/CUL DE SAC
09/30/2024	0.14	Sweeping Program #35	1ST DIST	STEVENAGE CT [1](SHREWSBURY RD/CUL DE
09/30/2024	0.20	Sweeping Program #35	1ST DIST	STOURHEAD CT [1](SHREWSBURY R D/CUL DI
09/30/2024	0.06	Sweeping Program #35	1ST DIST	STIRLING CT [1](SHREWSBURY RD/CUL DE SA
09/30/2024	0.08	Sweeping Program #35	1ST DIST	TELFORD CT [1](TEWKESBURY RD/CUL DE SA
09/30/2024	1.32	Sweeping Program #35	1ST DIST	TEWKSBURY RD [1](COKESBURY CIRCLE/SHR
09/30/2024	0.45	Sweeping Program #35	1ST DIST	THRASHER COURT(SKYLARK COURT/CUL DE
10/01/2024	1.10	Sweeping Program #35	1ST DIST	DECLARATION CIR [1](CHURCH CREEK RD/CH
10/01/2024	1.76	Sweeping Program #35	1ST DIST	GREY'S RUN CIR [1](CHURCH CREEK RD/CHU
10/01/2024	2.74	Sweeping Program #35	1ST DIST	CHURCH CREEK RD [1](RIVERSIDE PKWY/RIV
10/04/2024	0.28	Sweeping Program #35	1ST DIST	CHURCH POINT CT [1](POPLAR GROVE AVE/CI
10/04/2024	1.12	Sweeping Program #35	1ST DIST	GABLER'S SHORE COURT(MARINA AVENUE/CU
10/04/2024	0.22	Sweeping Program #35	1ST DIST	HERON ST [1](RT 159/SEAGULL DRIVE)
10/04/2024	0.32	Sweeping Program #35	1ST DIST	HOLLY AVENUE [1](PINE AVENUE/MITCHELL I
10/04/2024	0.54	Sweeping Program #35	1ST DIST	PERRYWOOD DR [1](SPESUTIA RD/END MAIN
10/04/2024	0.32	Sweeping Program #35	1ST DIST	PINE AVENUE [1](POPLAR GROVE AVE/OAKDA
10/04/2024	0.75	Sweeping Program #35	1ST DIST	MARINA AVENUE(RT. 159/BACK TO RT. 159 (CII
10/04/2024	0.75	Sweeping Program #35	1ST DIST	POPLAR GROVE AVE [1](PARK BEACH DR/PINI
10/04/2024	1.54	Sweeping Program #35	1ST DIST	SPESUTIA RD [1](RT 40/RT 159)
10/04/2024	0.18	Sweeping Program #35	1ST DIST	TEAKE LA [1](PERRYWOOD DR/WILLSHIRE DI
10/04/2024	0.42	Sweeping Program #35	1ST DIST	WILLSHIRE DR [1](SPESUTIA RD/END MAINT)
10/07/2024	0.16	Sweeping Program #35	1ST DIST	BEACON POINT CT [1](SHORE DR/CUL DE SAC
10/07/2024	0.26	Sweeping Program #35	1ST DIST	BREAKWATER CT [1](SHORE DR/CUL DE SAC)
10/07/2024	0.80	Sweeping Program #35	1ST DIST	BRIDGE DR [1](ANCHOR DR/TOWNE CENTER I
10/07/2024	0.26	Sweeping Program #35	1ST DIST	DRIFTWOOD CT [1](SHORE DR/CUL DE SAC)
10/07/2024	0.96	Sweeping Program #35	1ST DIST	ANCHOR DR [1](BRIDGE DR/SHORE DR)
10/07/2024	3.00	Sweeping Program #35	1ST DIST	JOPPA FARM RD (S) [1](RT 40/HAVERHILL RD)
10/07/2024	0.22	Sweeping Program #35	1ST DIST	COURT DR [1](ANCHOR DR/OLD CHURCH DR)
10/07/2024	0.12	Sweeping Program #35	1ST DIST	OLD CHURCH DR [1](COURT RD/NEPTUNE DR
10/07/2024	0.74	Sweeping Program #35	1ST DIST	OLD SOUND RD [1](NEPTUNE DR/BRIDGE DR)
10/07/2024	0.06	Sweeping Program #35	1ST DIST	MONTEREY CT [1](OLD SOUND DR/CUL DE SA
10/07/2024	0.92	Sweeping Program #35	1ST DIST	NEPTUNE DR [1](ANCHOR DR/NEPTUNE DR)
10/07/2024	1.72	Sweeping Program #35	1ST DIST	SHORE DRIVE [1](ANCHOR DRIVE/CUL-DE-SA

10/08/2024	0.06	Sweeping Program #35	1ST DIST	CANBY CT [1](CHELL RD/CUL DE SAC)
10/08/2024	0.64	Sweeping Program #35	1ST DIST	CHELL RD [1](DONCASTER RD/DONCASTER R
10/08/2024	0.06	Sweeping Program #35	1ST DIST	CURRY CT [1](CHELL RD/CUL DE SAC)
10/08/2024	0.06	Sweeping Program #35	1ST DIST	DALLAS CT [1](DONCASTER RD/CUL DE SAC)
10/08/2024	1.06	Sweeping Program #35	1ST DIST	DONCASTER RD [1](JOPPA FARM RD/DURYEA
10/08/2024	0.06	Sweeping Program #35	1ST DIST	DREW CT [1](DONCASTER RD/CUL DE SAC)
10/08/2024	0.46	Sweeping Program #35	1ST DIST	DURYEA DR [1](JOPPA FARM RD/DEAD END)
10/08/2024	1.96	Sweeping Program #35	1ST DIST	FALCONER RD [1](DURYEA DR/JOPPA FARM RI
10/08/2024	0.76	Sweeping Program #35	1ST DIST	FERGUSON RD [1](FALCONER RD/DURYEA DR
10/08/2024	0.36	Sweeping Program #35	1ST DIST	FOXWELL RD [1](FITZHUGH RD/FERGUSON RI
10/08/2024	0.32	Sweeping Program #35	1ST DIST	FITZHUGH RD [1](JOPPA FARM RD/FALCONER
10/08/2024	0.06	Sweeping Program #35	1ST DIST	FRAZIER CT [1](FERGUSON RD/CUL DE SAC)
10/08/2024	0.10	Sweeping Program #35	1ST DIST	FUNSTEN CT [1](FALCONER RD/CUL DE SAC)
10/08/2024	0.94	Sweeping Program #35	1ST DIST	HASLETT RD [1](GARNETT RD/RIVERIA DR)
10/08/2024	0.90	Sweeping Program #35	1ST DIST	RIVIERA DR [1](JOPPA FARM RD/KEARNEY DR
10/08/2024	1.25	Sweeping Program #35	1ST DIST	JOPPA FARM RD [1](FT HOYLE RD/CLIPPER RD
10/09/2024	0.12	Sweeping Program #35	1ST DIST	BELFAST CT [1](SPRINGDALE CT/CUL DE SAC)
10/09/2024	1.80	Sweeping Program #35	1ST DIST	FOSTER KNOLL DR [1](TRIMBLE RD/DEAD EN
10/09/2024	0.08	Sweeping Program #35	1ST DIST	KANE CT [1](KEMPER RD/CUL DE SAC)
10/09/2024	0.76	Sweeping Program #35	1ST DIST	KEARNEY DR [1](JOPPA FARM RD/END CO MA
10/09/2024	0.36	Sweeping Program #35	1ST DIST	KERSHAW RD [1](KEARNEY DR/GARNETT RD)
10/09/2024	0.18	Sweeping Program #35	1ST DIST	KERSHAW CT [1](KERSHAW RD/CDS TO CDS)
10/09/2024	0.08	Sweeping Program #35	1ST DIST	KILGORE CT [1](KERSHAW RD/CDS TO CDS)
10/09/2024	0.36	Sweeping Program #35	1ST DIST	KEMPER RD [1](KEARNEY DR/GARNETT RD)
10/09/2024	0.10	Sweeping Program #35	1ST DIST	KIMBALL CT [1](KEMPER RD/CUL DE SAC)
10/09/2024	1.56	Sweeping Program #35	1ST DIST	GARNETT RD [1](TRIMBLE RD/CUL DE SAC)
10/09/2024	0.48	Sweeping Program #35	1ST DIST	LATIMER RD [1](KEARNEY DR/GARNETT RD)
10/09/2024	0.12	Sweeping Program #35	1ST DIST	ROSECREST CT [1](FOSTER KNOLL DR/CUL DI
10/09/2024	0.24	Sweeping Program #35	1ST DIST	SPRINGDALE CT [1](FOSTER KNOLL DR/CUL D
10/09/2024	0.28	Sweeping Program #35	1ST DIST	SWEETBRIAR COURT [1](FOSTER KNOLL DRIV
10/09/2024	0.55	Sweeping Program #35	1ST DIST	TRAILS WAY(FOSTER KNOLL DRIVE/CDS / ISL/
10/09/2024	0.75	Sweeping Program #35	1ST DIST	JOPPA FARM RD [1](FT HOYLE RD/CLIPPER RD
10/10/2024	0.24	Sweeping Program #35	1ST DIST	AVEDON CT [1](STILLMEADOW DR/CUL DE SA
10/10/2024	0.06	Sweeping Program #35	1ST DIST	ARMADA CT [1](BRITTANY DR/CUL DE SAC)
10/10/2024	0.40	Sweeping Program #35	1ST DIST	BLACKBURN CT [1](STILLMEADOW DR/CUL D
10/10/2024	0.28	Sweeping Program #35	1ST DIST	BRITTANY DR [1](CHIMNEY OAK DR/T TURN A
10/10/2024	0.25	Sweeping Program #35	1ST DIST	BURNSIDE CT [1](STILLMEADOW DR/CUL DE S
10/10/2024	0.22	Sweeping Program #35	1ST DIST	BERKSHIRE CT [1](HAVERHILL RD/CUL DE SAC
10/10/2024	0.60	Sweeping Program #35	1ST DIST	CHIMNEY OAK DR [1](CUL DE SAC/T TURN AR
10/10/2024	0.08	Sweeping Program #35	1ST DIST	KENYON CT [1](BURNSIDE CT/CUL DE SAC)
10/10/2024	0.22	Sweeping Program #35	1ST DIST	OAKWAY CT [1](CHIMNEY OAK DR/CUL DE SA
10/10/2024	0.10	Sweeping Program #35	1ST DIST	RAMSEY COURT [1](HAVERHILL ROAD/CUL DE
10/10/2024	0.40	Sweeping Program #35	1ST DIST	RIPPLEWOOD RD [1](HAVERHILL RD/STILLME
10/10/2024	0.46	Sweeping Program #35	1ST DIST	ROXBURY CT [1](STILLMEADOW DR/CUL DE S
10/10/2024	0.20	Sweeping Program #35	1ST DIST	SHEFFIELD CT [1](RIPPLEWOOD RD/CUL DE S.
10/10/2024	0.88	Sweeping Program #35	1ST DIST	STILLMEADOW DR [1](JOPPA FARM RD/HAVEI
10/10/2024	0.18	Sweeping Program #35	1ST DIST	SUMMERFIELD CT [1](RIPPLEWOOD RD/CUL D

Public Works - Bureau of Highways

Work Order Master Report

10/10/2024	2.16	Sweeping Program #35	1ST DIST	HAVERHILL RD [1](TRIMBLE RD/END OF MAI
10/10/2024	1.25	Sweeping Program #35	1ST DIST	JOPPA FARM RD (S) [1](RT 40/HAVERHILL RD)
10/11/2024	0.22	Sweeping Program #35	1ST DIST	CONTEE RD [1](CHATFIELD RD/CUL DE SAC)
Mark Henry called said got robo Call but no one came so we sweept today				
10/11/2024	0.08	Sweeping Program #35	1ST DIST	CHARMUTH CT [1](HAVERHILL RD/CUL DE SA
10/11/2024	0.04	Sweeping Program #35	1ST DIST	CUTLER CT [1](TARTAN GREEN CT/CUL DE SA
10/11/2024	0.70	Sweeping Program #35	1ST DIST	ACADIA DR [1](FOSTER KNOLL DR/HAVERHIL
10/11/2024	0.10	Sweeping Program #35	1ST DIST	BARRINGTON CT [1](NEWBERRY CT/CUL DE S.
10/11/2024	0.18	Sweeping Program #35	1ST DIST	DUNFIELD CT [1](LARKSPUR DR/CUL DE SAC)
10/11/2024	1.56	Sweeping Program #35	1ST DIST	GARNETT RD [1](TRIMBLE RD/CUL DE SAC)
10/11/2024	0.46	Sweeping Program #35	1ST DIST	GILMOR RD [1](GARNETT RD/T TURN AROUN
10/11/2024	0.10	Sweeping Program #35	1ST DIST	GLANDEL CT [1](GILMOR RD/CUL DE SAC)
10/11/2024	0.18	Sweeping Program #35	1ST DIST	GRIGSBY CT [1](GILMOR RD/CUL DE SAC)
10/11/2024	0.18	Sweeping Program #35	1ST DIST	FOWLER CT [1](LARKSPUR DR/CUL DE SAC)
10/11/2024	1.80	Sweeping Program #35	1ST DIST	FOSTER KNOLL DR [1](TRIMBLE RD/DEAD EN
10/11/2024	2.00	Sweeping Program #35	1ST DIST	HAVERHILL RD [1](TRIMBLE RD/END OF MAI
10/11/2024	0.46	Sweeping Program #35	1ST DIST	HARDIN DR [1](HASLETT RD/HASLETT RD)
10/11/2024	0.94	Sweeping Program #35	1ST DIST	HASLETT RD [1](GARNETT RD/RIVERIA DR)
10/14/2024	1.88	Sweeping Program #35	1ST DIST	TRIMBLE RD (W) [1](JOPPA RD/JOPPA FARM RI
10/14/2024	0.36	Sweeping Program #35	1ST DIST	MARINER RD [1](TRIMBLE RD/ENFIELD RD)
10/14/2024	1.68	Sweeping Program #35	1ST DIST	ENFIELD RD [1](RT 40/CUL DE SAC)
10/14/2024	0.16	Sweeping Program #35	1ST DIST	STONE CT [1](ENFIELD RD/CUL DE SAC)
10/14/2024	0.48	Sweeping Program #35	1ST DIST	JOPPA CROSSING CT [1](ENFIELD RD/CUL DE S
10/14/2024	0.44	Sweeping Program #35	1ST DIST	JOPPA CROSSING WAY [1](ENFIELD RD/JOPPA (
10/14/2024	0.70	Sweeping Program #35	1ST DIST	ERWIN DR [1](TRIMBLE RD/ENFIELD RD)
10/14/2024	0.72	Sweeping Program #35	1ST DIST	ENSOR DR [1](ERWIN DR/ENFIELD RD)
10/14/2024	0.08	Sweeping Program #35	1ST DIST	ENSOR CT [1](ENSOR DR/CUL DE SAC)
10/14/2024	0.60	Sweeping Program #35	1ST DIST	EMMERICK DR [1](TRIMBLE RD/ENFIELD RD)
10/14/2024	0.62	Sweeping Program #35	1ST DIST	ECKHART DR [1](EMMERICK DR/ENSOR DR)
10/14/2024	0.10	Sweeping Program #35	1ST DIST	ECHOLS CT [1](ECKHART DR/CUL DE SAC)
10/14/2024	0.08	Sweeping Program #35	1ST DIST	ERICKSON CT [1](ECKHART DR/CUL DE SAC)
10/14/2024	0.92	Sweeping Program #35	1ST DIST	JOPPA RD (S) [1](RT 40/TRIMBLE RD)
10/14/2024	0.44	Sweeping Program #35	1ST DIST	OAK AVE [1](RT 40/END MAINT)
10/14/2024	0.84	Sweeping Program #35	1ST DIST	PINE RD [1](RT 40/END MAINT)
10/14/2024	0.14	Sweeping Program #35	1ST DIST	BARRYS LA [1](PINE RD/WEISSER CT)
10/14/2024	0.16	Sweeping Program #35	1ST DIST	WIESSER CT [1](BARRYS LA/CUL DE SAC)
10/15/2024	0.26	Sweeping Program #35	1ST DIST	BROOKE CT [1](MAGNOLIA RIDGE/CUL DE SAC
10/15/2024	0.30	Sweeping Program #35	1ST DIST	CLIPPER DR [1](JOPPA FARM RD/FT HOYLE RD
10/15/2024	1.28	Sweeping Program #35	1ST DIST	DEMBYTOWN RD [1](TRIMBLE RD/T TURN AR
10/15/2024	0.18	Sweeping Program #35	1ST DIST	ELK COURT(POTOMAC ROAD/T-TURN AROUN
10/15/2024	0.50	Sweeping Program #35	1ST DIST	FALCONBRIDGE DR [1](TRIMBLE RD/TRIMBLI
10/15/2024	0.64	Sweeping Program #35	1ST DIST	FOSTER BRANCH RD [1](TRIMBLE RD/END OF
10/15/2024	2.44	Sweeping Program #35	1ST DIST	FORT HOYLE RD [1](TRIMBLE RD/RT 152)
10/15/2024	0.34	Sweeping Program #35	1ST DIST	MAGNOLIA RIDGE DR [1](TRIMBLE RD/DEAD
10/15/2024	0.48	Sweeping Program #35	1ST DIST	POTOMAC ROAD(515 POTOMAC ROAD/CIRCLE
10/15/2024	0.68	Sweeping Program #35	1ST DIST	ROGERS FORD LANE [1](TRIMBLE ROAD/UNKI
10/15/2024	0.20	Sweeping Program #35	1ST DIST	SHENANDOAH COURT [1](ROGERS FORD LANI
10/15/2024	0.30	Sweeping Program #35	1ST DIST	STAYSAIL DR [1](CLIPPER RD/CUL DE SAC W/I

10/15/2024	2.00	Sweeping Program #35	1ST DIST	TRIMBLE RD (C) [1](GARNETT RD/JOPPA RD)
10/15/2024	0.30	Sweeping Program #35	1ST DIST	TERRAPIN TERRACE [1](TRIMBLE ROAD (W)/T
10/15/2024	0.22	Sweeping Program #35	1ST DIST	WHITE PINE LA [1](MAGNOLIA RIDGE/WOODN
10/15/2024	0.24	Sweeping Program #35	1ST DIST	WINGSAIL CT [1](CLIPPER DR/CUL DE SAC W/
10/15/2024	0.36	Sweeping Program #35	1ST DIST	WOODMONT CT [1](MAGNOLIA RIDGE/CUL DI
10/16/2024	0.34	Sweeping Program #35	1ST DIST	ARMSTRONG ST [1](MC CANN ST/BROWN ST)
10/16/2024	0.20	Sweeping Program #35	1ST DIST	BROWN ST [1](WEBSTER ST/STARR ST)
10/16/2024	0.18	Sweeping Program #35	1ST DIST	EASTFIELDS WAY [1](TRIMBLE FIELDS DR/SOU
10/16/2024	0.46	Sweeping Program #35	1ST DIST	FULFILLMENT DR [1](TRIMBLE RD/CUL DE SA
10/16/2024	0.40	Sweeping Program #35	1ST DIST	GRAYMOUNT WAY [1](TURQUOISE CIRCLE/CI
10/16/2024	0.60	Sweeping Program #35	1ST DIST	MCCANN ST [1](TRIMBLE RD/NUTTAL AVE (E)
10/16/2024	0.20	Sweeping Program #35	1ST DIST	MORGAN ST [1](STARR ST/WEBSTER ST)
10/16/2024	1.26	Sweeping Program #35	1ST DIST	NUTTAL AVE (E) [1](RT 755/DEAD END)
10/16/2024	1.04	Sweeping Program #35	1ST DIST	NUTTAL AVE (W) [1](TRIMBLE RD/OLD NUTTA
10/16/2024	0.14	Sweeping Program #35	1ST DIST	NORTHFIELDS COURT [1](EASTFIELDS WAY/C
10/16/2024	0.34	Sweeping Program #35	1ST DIST	STARR ST [1](MC CANN ST/ROCKWELL ST)
10/16/2024	0.30	Sweeping Program #35	1ST DIST	ROCKWELL ST [1](WEBSTER ST/STARR ST)
10/16/2024	0.24	Sweeping Program #35	1ST DIST	SEVERN WAY [1](TRIMBLE ROAD/SEVERN WA
10/16/2024	0.06	Sweeping Program #35	1ST DIST	SOUTHRIDGE CT [1](SOUTHRIDGE DR/CUL DE
10/16/2024	0.56	Sweeping Program #35	1ST DIST	SOUTHRIDGE DR [1](TRIMBLE RD/CUL DE SA(
10/16/2024	0.32	Sweeping Program #35	1ST DIST	OLD NUTTAL AVE [1](NUTTAL AVE (W)/NUTTA
10/16/2024	0.46	Sweeping Program #35	1ST DIST	TRIMBLE FIELDS DRIVE [1](TRIMBLE ROAD/C
10/16/2024	0.22	Sweeping Program #35	1ST DIST	TURQUOISE CIRCLE(TRIMBLE ROAD/CIRCLE)
10/16/2024	1.00	Sweeping Program #35	1ST DIST	TRIMBLE RD (E) [1](RT 755/GARNETT RD)
10/18/2024	0.12	Sweeping Program #35	1ST DIST	BAGNELL COURT [1](BROADNECK CROSSING
10/18/2024	0.28	Sweeping Program #35	1ST DIST	BAGNELL ROAD [1](BROADNECK CROSSING R
10/18/2024	0.32	Sweeping Program #35	1ST DIST	BEAVER CROSSING ROAD [1](BROADNECK CR
10/18/2024	0.10	Sweeping Program #35	1ST DIST	BOURNE WAY [1](BROADNECK CROSSING WA
10/18/2024	0.18	Sweeping Program #35	1ST DIST	CAPTAINS COVE COURT [1](WILLOUGHBYS W
10/18/2024	0.14	Sweeping Program #35	1ST DIST	CANOE LANE [1](INDIANS LAIR/CUL DE SAC)
10/18/2024	0.12	Sweeping Program #35	1ST DIST	CROWN CI [1](BROADNECK CROSSING RD/BR
10/18/2024	0.24	Sweeping Program #35	1ST DIST	INDIAN'S LAIR [1](BROADNECK CROSSING RD
10/18/2024	0.12	Sweeping Program #35	1ST DIST	HERITAGE THRONE WAY [1](MAIDENS LANE/(
10/18/2024	0.08	Sweeping Program #35	1ST DIST	KING JAMES CI [1](BROADNECK CROSSING RI
10/18/2024	0.14	Sweeping Program #35	1ST DIST	KEALE WAY [1](BROADNECK CROSSING RD/C
10/18/2024	0.50	Sweeping Program #35	1ST DIST	LORD WILLOUGHBY WAY [1](WILLOUGHBY B
10/18/2024	0.20	Sweeping Program #35	1ST DIST	MAJESTY LN [1](BROADNECK CROSSING RD/(
10/18/2024	0.78	Sweeping Program #35	1ST DIST	OAK ST [1](WILLOUGHBY BEACH RD/T TURN
10/18/2024	1.80	Sweeping Program #35	1ST DIST	BROADNECK CROSSING RD [1](WILLOUGHBY
10/18/2024	0.36	Sweeping Program #35	1ST DIST	PINE ST [1](RT 755/DEAD END)
10/18/2024	0.36	Sweeping Program #35	1ST DIST	PROFITT PATH [1](WILLOUGHBYS WAY/CUL D
10/18/2024	0.24	Sweeping Program #35	1ST DIST	TODKILL TRACE [1](WILLOUGHBYS WAY/CUL
10/18/2024	0.50	Sweeping Program #35	1ST DIST	WILLOUGHBY BEACH RD [1](TRIMBLE RD/KE
10/21/2024	0.74	Sweeping Program #35	1ST DIST	AHERN DRIVE [1](WILLOUGHBY BEACH ROAI
10/21/2024	0.34	Sweeping Program #35	1ST DIST	ANCON COURT [1](AHERN DRIVE/CUL DE SAC
10/21/2024	1.02	Sweeping Program #35	1ST DIST	ALBANTOWNE WAY [1](WILLOUGHBY BEACH
10/21/2024	0.10	Sweeping Program #35	1ST DIST	IRIS DR [1](LABURNUM RD/WINTERBERRY DI



Public Works - Bureau of Highways

Work Order Master Report

10/21/2024	1.16	Sweeping Program #35	1ST DIST	LABURNUM RD [1](WILLOUGHBY BEACH RD/
10/21/2024	0.20	Sweeping Program #35	1ST DIST	LANSDOWNE CT [1](ALBANTOWNE WAY/CUL
10/21/2024	0.08	Sweeping Program #35	1ST DIST	LASONIA CT [1](ALBANTOWNE WAY/CUL DE S
10/21/2024	0.40	Sweeping Program #35	1ST DIST	MAHONIA WAY [1](REDBUD RD/SIWANOY DR)
10/21/2024	0.60	Sweeping Program #35	1ST DIST	PALMETTO DR [1](REDBUD RD/REDBUD RD)
10/21/2024	0.72	Sweeping Program #35	1ST DIST	REDBUD RD [1](SWEETBAY DR/LABURNUM R
10/21/2024	0.24	Sweeping Program #35	1ST DIST	SEABROOK CT [1](ALBANTOWNE WAY/CUL D
10/21/2024	1.02	Sweeping Program #35	1ST DIST	SIWANOY DRIVE [1](AHERN DRIVE/CUL DE SA
10/21/2024	0.10	Sweeping Program #35	1ST DIST	LILAC CT [1](WINTERBERRY DR/CUL DE SAC)
10/22/2024	0.06	Sweeping Program #35	1ST DIST	ARBOR CT [1](THORNBERRY DR/CUL DE SAC)
10/22/2024	0.08	Sweeping Program #35	1ST DIST	BURLWOOD CT [1](HARTWOOD LA/CUL DE SA
10/22/2024	0.08	Sweeping Program #35	1ST DIST	BUTTERNUT CT [1](HARTWOOD LA/CUL DE S.
10/22/2024	0.08	Sweeping Program #35	1ST DIST	CRESTWOOD CT [1](CRESTWOOD DR/DEAD EI
10/22/2024	0.46	Sweeping Program #35	1ST DIST	CRESTWOOD DR [1](WALTERS RD/FLYING POI
10/22/2024	1.00	Sweeping Program #35	1ST DIST	FLYING POINT RD [1](WILLOUGHBY BEACH R
10/22/2024	0.40	Sweeping Program #35	1ST DIST	HARTWOOD LA [1](THORNBERRY DR/SEQUOI
10/22/2024	1.50	Sweeping Program #35	1ST DIST	KENNARD AVE [1](FLYING POINT PARK/END C
10/22/2024	0.38	Sweeping Program #35	1ST DIST	LOVE AVE [1](CRESTWOOD DR/KENNARD AVE
10/22/2024	0.08	Sweeping Program #35	1ST DIST	LOVE CT [1](LOVE AVE/CUL DE SAC)
10/22/2024	1.10	Sweeping Program #35	1ST DIST	SEQUOIA DR [1](WILLOUGHBY BEACH RD/SE(
10/22/2024	0.44	Sweeping Program #35	1ST DIST	SYCAMORE LA [1](PAPAYA RD/GREENHEART I
10/22/2024	0.72	Sweeping Program #35	1ST DIST	THORNBERRY DR [1](SEQUOIA DR/SEQUOIA D
10/23/2024	0.34	Sweeping Program #35	1ST DIST	RETREAT CT [1](EDGEWOOD RD/CUL DE SAC)
10/23/2024	0.22	Sweeping Program #35	1ST DIST	SANDPIPER CT [1](WILLOUGHBY BEACH RD/(
10/23/2024	0.66	Sweeping Program #35	1ST DIST	SILVERSIDE RD [1](WILLOUGHBY BEACH RD/.
10/23/2024	0.18	Sweeping Program #35	1ST DIST	SUGARBERRY COURT [1](SILVERSIDE ROAD/C
10/23/2024	0.28	Sweeping Program #35	1ST DIST	BERG WAY [1](RT 755/CUL DE SAC)
10/23/2024	0.40	Sweeping Program #35	1ST DIST	CLEARVIEW RD [1](RT 7/PIN OAK RD)
10/23/2024	0.22	Sweeping Program #35	1ST DIST	PIN OAK RD [1](WILLOW OAK RD/CLEARVIEW
10/23/2024	0.30	Sweeping Program #35	1ST DIST	WILLOW OAK RD [1](PIN OAK RD/T TURN ARC
10/23/2024	0.14	Sweeping Program #35	1ST DIST	HOLMAN DR [1](PIN OAK RD/DEAD END)
10/23/2024	0.84	Sweeping Program #35	1ST DIST	CONTINENTAL DR [1](GOVERNOR'S CT/RT 7)
10/23/2024	0.52	Sweeping Program #35	1ST DIST	GOVERNOR'S CT [1](RT 7/CUL DE SAC)
10/23/2024	0.16	Sweeping Program #35	1ST DIST	PERIWINKLE WAY [1](SANDPIPER CT/CUL DE
10/23/2024	0.14	Sweeping Program #35	1ST DIST	BLUEBERRY CT [1](SILVERSIDE RD/CUL DE SA
10/23/2024	0.16	Sweeping Program #35	1ST DIST	ORCHID CT [1](SILVERSIDE RD/CUL DE SAC)
10/23/2024	0.16	Sweeping Program #35	1ST DIST	ARUM CT [1](SILVERSIDE RD/CUL DE SAC)
10/23/2024	0.16	Sweeping Program #35	1ST DIST	MOLLY COURT [1](SILVERSIDE RD/CUL-DE-SA
10/23/2024	0.30	Sweeping Program #35	1ST DIST	AHERN DRIVE [1](WILLOUGHBY BEACH ROAL
10/24/2024	1.58	Sweeping Program #35	1ST DIST	EBBTIDE DR [1](SOUNDING DR/SOUNDING DR
10/24/2024	0.10	Sweeping Program #35	1ST DIST	LABURNUM RD [1](WILLOUGHBY BEACH RD/
10/24/2024	0.46	Sweeping Program #35	1ST DIST	HAVEN PLACE [1](PIER DR/SOUNDING DR)
10/24/2024	0.22	Sweeping Program #35	1ST DIST	PIER DR [1](SOUNDING DR/DEEPWATER WAY)
10/24/2024	0.26	Sweeping Program #35	1ST DIST	SHELTER COVE ST [1](DEEP WATER WAY/EBB
10/24/2024	0.90	Sweeping Program #35	1ST DIST	DEEPWATER WAY [1](HARBOUR OAKS DR/EBE
10/24/2024	0.10	Sweeping Program #35	1ST DIST	TRADEWINDS CT [1](EBBTIDE CT/CUL DE SAC
10/24/2024	0.10	Sweeping Program #35	1ST DIST	BUOY CT [1](EBBTIDE DR/CUL DE SAC)



Public Works - Bureau of Highways

Work Order Master Report

10/24/2024	0.90	Sweeping Program #35	1ST DIST	SOUNDING DR [1](EBBTIDE DR/TTA TO TTA)
10/24/2024	0.50	Sweeping Program #35	1ST DIST	HARBOUR OAK DR [1](WILLOUGHBY BEACH
10/24/2024	0.90	Sweeping Program #35	1ST DIST	FREYS ROAD [1](END OF BT/DEAD END)
10/24/2024	0.10	Sweeping Program #35	1ST DIST	GOLDENEYE COURT [1](OTTER CREEK ROAD/
10/24/2024	0.48	Sweeping Program #35	1ST DIST	OTTER CREEK ROAD [1](FREYS ROAD/CUL DE
10/24/2024	0.26	Sweeping Program #35	1ST DIST	CASPIAN COURT [1](OTTER CREEK ROAD/CUI
10/24/2024	0.26	Sweeping Program #35	1ST DIST	KINGFISHER ROAD [1](FREYS ROAD/CASPIAN
10/24/2024	0.12	Sweeping Program #35	1ST DIST	PINTAIL COURT [1](OTTER CREEK ROAD/CUL
10/24/2024	0.14	Sweeping Program #35	1ST DIST	BLUE HERON COURT [1](KINGFISHER RD/CUL
10/24/2024	0.20	Sweeping Program #35	1ST DIST	BLACKBIRD COURT [1](KINGFISHER RD/CUL I
10/24/2024	0.20	Sweeping Program #35	1ST DIST	RIVERSHORE CT [1](FREY'S RD/CUL DE SAC)
10/28/2024	1.10	Sweeping Program #35	1ST DIST	BAYBERRY RD [1](HANSON RD (N&S)/RT 755)
10/28/2024	0.14	Sweeping Program #35	1ST DIST	BELLFLOWER CT [1](BOXELDER DR/CUL DE S/
10/28/2024	0.72	Sweeping Program #35	1ST DIST	BOXELDER DR [1](HANSON RD/T TURN AROU
10/28/2024	0.68	Sweeping Program #35	1ST DIST	CEDAR DR [1](RT 755/END CO MAINT - T)
10/28/2024	0.06	Sweeping Program #35	1ST DIST	CHERRY CT [1](HANSON RD/CUL DE SAC)
10/28/2024	0.14	Sweeping Program #35	1ST DIST	CHERRY PL [1](TUPELO RD/CUL DE SAC)
10/28/2024	0.44	Sweeping Program #35	1ST DIST	CHERRY RD [1](HANSON RD/TUPELO RD)
10/28/2024	0.76	Sweeping Program #35	1ST DIST	HAREWOOD RD [1](BAYBERRY RD/DEAD END
10/28/2024	0.32	Sweeping Program #35	1ST DIST	HAWTHORNE RD [1](HAREWOOD RD/HAREW(
10/28/2024	0.18	Sweeping Program #35	1ST DIST	HEMLOCK RD [1](BAYBERRY RD/HAREWOOD
10/28/2024	1.25	Sweeping Program #35	1ST DIST	HANSON RD [1](PERRY AVE/RT 152)
10/28/2024	0.12	Sweeping Program #35	1ST DIST	FERN ST [1](HANSON RD/END CO MAINT)
10/28/2024	0.36	Sweeping Program #35	1ST DIST	JUNIPER RD [1](TUPELO RD/BAYBERRY RD)
10/28/2024	0.06	Sweeping Program #35	1ST DIST	MANDARIN CT [1](BOXELDER DR/CUL DE SAC
10/28/2024	0.06	Sweeping Program #35	1ST DIST	LARCH CT [1](LARCH DR/CUL DE SAC)
10/28/2024	0.44	Sweeping Program #35	1ST DIST	LARCH DR [1](HANSON RD/BOXELDER DR)
10/28/2024	0.12	Sweeping Program #35	1ST DIST	TULIP CT [1](JUNIPER RD/CUL DE SAC)
10/28/2024	0.34	Sweeping Program #35	1ST DIST	TUPELO RD [1](BAYBERRY RD/CUL DE SAC)
10/28/2024	0.24	Sweeping Program #35	1ST DIST	WINGLEAF CT [1](BOXELDER DR/CUL DE SAC
10/29/2024	0.12	Sweeping Program #35	1ST DIST	BURLINGTON CT [1](HARFORD SQUARE DR/C
10/29/2024	0.24	Sweeping Program #35	1ST DIST	CANDLEWOOD DR [1](MEADOWOOD DR/DEA
10/29/2024	0.22	Sweeping Program #35	1ST DIST	CARDIFF CI [1](WALTMAN RD/WALTMAN RD)
10/29/2024	0.50	Sweeping Program #35	1ST DIST	CHARLESTOWN DR [1](HARFORD SQUARE DR
10/29/2024	1.48	Sweeping Program #35	1ST DIST	CLOVER VALLEY WAY [1](WOODBRIDGE CENT
10/29/2024	0.14	Sweeping Program #35	1ST DIST	CLOVER VALLEY CT (N) [1](CLOVER VALLEY
10/29/2024	0.10	Sweeping Program #35	1ST DIST	CLOVER VALLEY CT (S) [1](CLOVER VALLEY \
10/29/2024	0.08	Sweeping Program #35	1ST DIST	DOGWOOD DELL CT [1](CLOVER VALLEY WA\
10/29/2024	1.35	Sweeping Program #35	1ST DIST	HARFORD SQUARE DR [1](HANSON RD/HANS(
10/29/2024	2.25	Sweeping Program #35	1ST DIST	HANSON RD [1](PERRY AVE/RT 152)
10/29/2024	0.22	Sweeping Program #35	1ST DIST	JAMESTOWN CT [1](HARFORD SQUARE DR/CU
10/29/2024	0.14	Sweeping Program #35	1ST DIST	LILY POND CT [1](CLOVER VALLEY WAY/CUL
10/29/2024	0.68	Sweeping Program #35	1ST DIST	MEADOWOOD DR [1](HANSON RD/END MAIN'
10/30/2024	0.06	Sweeping Program #35	1ST DIST	APPLE ORCHARD CT [1](WINDY BRANCH WAY
10/30/2024	1.64	Sweeping Program #35	1ST DIST	BROOKSIDE DR [1](WATERGATE DR/GILWAY C
10/30/2024	0.16	Sweeping Program #35	1ST DIST	CEDAR CREST CT [1](WINDY BRANCH WAY/CI
10/30/2024	1.10	Sweeping Program #35	1ST DIST	EDGEWATER DR [1](WATERGATE CT/DEAD EN

10/30/2024	0.38	Sweeping Program #35	1ST DIST	GATEWAY RD [1](RT 40/BROOKSIDE DR)
10/30/2024	0.06	Sweeping Program #35	1ST DIST	HORSESHOE LA W [1](TOP VIEW DR/DEAD EN
10/30/2024	0.10	Sweeping Program #35	1ST DIST	HORSESHOE LN E [1](TOP VIEW DR/DEAD EN
10/30/2024	0.14	Sweeping Program #35	1ST DIST	CLOVER VALLEY WAY [1](WOODBRIDGE CENT
10/30/2024	0.08	Sweeping Program #35	1ST DIST	RAINBOW GARDEN CT [1](WINDY BRANCH W
10/30/2024	0.58	Sweeping Program #35	1ST DIST	SWALLOW CREST DR [1](WOODBRIDGE CENT
10/30/2024	0.44	Sweeping Program #35	1ST DIST	TOP VIEW DR [1](BROOKSIDE DR/EDGEWATEI
10/30/2024	0.36	Sweeping Program #35	1ST DIST	TREE TOP DR [1](RT 40/BROOKSIDE DR)
10/30/2024	0.34	Sweeping Program #35	1ST DIST	WATERGATE CT [1](EDGEWATER DR/CUL DE S
10/30/2024	0.64	Sweeping Program #35	1ST DIST	WINDY BRANCH WAY [1](RT 152/WOODBRIDG
10/30/2024	0.38	Sweeping Program #35	1ST DIST	WOODBRIDGE STATION WAY [1](WOODBRIDG
10/30/2024	1.78	Sweeping Program #35	1ST DIST	WOODBRIDGE CENTER WAY [1](RT 40/HANSO
10/31/2024	1.28	Sweeping Program #35	1ST DIST	HARBINGER TRAIL [1](EDGEWATER DR/EDGE\
10/31/2024	0.08	Sweeping Program #35	1ST DIST	SERENITY CT [1](HARBINGER TRAIL/CUL DE S
10/31/2024	0.18	Sweeping Program #35	1ST DIST	ERMINE CT [1](HARBINGER TRAIL/CUL DE SA
10/31/2024	0.10	Sweeping Program #35	1ST DIST	WATERFOWL CT [1](ERMINE CT/CUL DE SAC)
10/31/2024	0.06	Sweeping Program #35	1ST DIST	SAILBOAT CT [1](HARBINGER TRAIL/CUL DE S
10/31/2024	0.30	Sweeping Program #35	1ST DIST	FISHERMAN LA [1](EDGEWATER DR/HARBING
10/31/2024	0.10	Sweeping Program #35	1ST DIST	MELODY CT [1](HARBINGER TRAIL/CUL DE SA
10/31/2024	0.06	Sweeping Program #35	1ST DIST	MALLARD CT [1](HARBINGER TRAIL/CUL DE S
10/31/2024	0.08	Sweeping Program #35	1ST DIST	WATERSIDE CT [1](BROOKSIDE DR/CUL DE SA
10/31/2024	1.00	Sweeping Program #35	1ST DIST	PAUL MARTIN DR [1](RT 40/MICHAELS DR)
10/31/2024	1.00	Sweeping Program #35	1ST DIST	MICHAEL DR [1](PAUL MARTIN DR/CHIPPER D
10/31/2024	0.22	Sweeping Program #35	1ST DIST	MAGNOLIA WOODS LA [1](RT 40/DEAD END)
10/31/2024	3.14	Sweeping Program #35	1ST DIST	EDGEWOOD RD [1](RT 40/VAN BIBBER RD (N))
10/31/2024	0.12	Sweeping Program #35	1ST DIST	BLEVINS RD [1](EDGEWOOD RD/T TURN AROU
10/31/2024	0.60	Sweeping Program #35	1ST DIST	ELDERBERRY DR [1](EDGEWOOD RD/CUL-DE-
10/31/2024	0.12	Sweeping Program #35	1ST DIST	HALL ST [1](ELDERBERRY DR/BLEVINS RD)
10/31/2024	0.28	Sweeping Program #35	1ST DIST	BARBERRY DR [1](ELDERSBERRY DR/VAN BIB
10/31/2024	1.00	Sweeping Program #35	1ST DIST	VAN BIBBER RD S [1](RT 7/DEAD END @ CSX)
11/01/2024	0.10	Sweeping Program #35	1ST DIST	FOUR SEASONS DRIVE(ROUTE 7/ROUND ABOU
11/01/2024	0.10	Sweeping Program #35	1ST DIST	INDIANSUMMER COURT(ROUND ABOUT/CUL I
11/01/2024	0.10	Sweeping Program #35	1ST DIST	RAKING LEAF DRIVE [1](ROUND ABOUT/ROUN
11/01/2024	0.32	Sweeping Program #35	1ST DIST	PUMPKIN PATCH CT [1](RAKING LEAF DR/CDS
11/01/2024	0.20	Sweeping Program #35	1ST DIST	AMEDORO COURT [1](ROUTE 7/CUL DE SAC)
11/01/2024	0.26	Sweeping Program #35	1ST DIST	ROSARY COURT [1](AMEDORO COURT/CUL DE
11/01/2024	0.20	Sweeping Program #35	1ST DIST	COKESBURY CI [1](TEWKESBURY RD/SHREWS
11/01/2024	0.14	Sweeping Program #35	1ST DIST	COTSWOLD CT [1](TEWKESBURY RD/CUL DE
11/01/2024	0.28	Sweeping Program #35	1ST DIST	COGSWELL CT [1](ABINGDON RD/CUL DE SAC
11/01/2024	0.56	Sweeping Program #35	1ST DIST	TEWKESBURY RD [1](ABINGDON RD/COKESB
11/01/2024	0.20	Sweeping Program #35	1ST DIST	CHELMSFORD CT [1](TEWKESBURY RD/CUL D
11/01/2024	0.62	Sweeping Program #35	1ST DIST	SHREWSBURY RD [1](ABINGDON RD/COKESB
11/01/2024	0.20	Sweeping Program #35	1ST DIST	STOURHEAD CT [1](SHREWSBURY R D/CUL DI
11/01/2024	0.10	Sweeping Program #35	1ST DIST	PENSHURST CT [1](SHREWSBURY RD/CUL DE
11/01/2024	0.16	Sweeping Program #35	1ST DIST	STEVENAGE CT [1](SHREWSBURY RD/CUL DE
11/01/2024	0.16	Sweeping Program #35	1ST DIST	HATFIELD CT [1](SHREWSBURY RD/CUL DE SA
11/01/2024	0.10	Sweeping Program #35	1ST DIST	CAMBERLEY CT [1](SHREWSBURY RD/CUL DE

Public Works - Bureau of Highways

Work Order Master Report

11/01/2024	0.10	Sweeping Program #35	1ST DIST	ALDERSHOT CT [1](SHREWSBURY RD/CUL DE
11/01/2024	0.08	Sweeping Program #35	1ST DIST	LEEDS CT [1](SHREWSBURY RD/CUL DE SAC)
11/01/2024	0.08	Sweeping Program #35	1ST DIST	NORWICH CT [1](TEWKESBURY RD/CUL DE SA
11/01/2024	0.10	Sweeping Program #35	1ST DIST	CULLODEN CT [1](TEWKESBURY RD/CUL DE S
11/01/2024	0.10	Sweeping Program #35	1ST DIST	TELFORD CT [1](TEWKESBURY RD/CUL DE SA
11/01/2024	0.06	Sweeping Program #35	1ST DIST	TROWBRIDGE CT [1](TEWKESBURY RD/CUL D
11/01/2024	0.18	Sweeping Program #35	1ST DIST	PORTSMOUTH CT [1](SHREWSBURY RD/CUL D
11/01/2024	0.08	Sweeping Program #35	1ST DIST	LETCHWORTH CT [1](SHREWSBURY RD/CUL D
11/05/2024	1.28	Sweeping Program #35	1ST DIST	SEWELL RD [1](ABINGDON RD/DEAD END)
11/05/2024	0.88	Sweeping Program #35	1ST DIST	WOLF TRAIL DRIVE [1](HARFORD TOWN DR/S
11/05/2024	0.18	Sweeping Program #35	1ST DIST	COYOTE CT [1](WOLF TRAIL DR/CUL DE SAC)
11/05/2024	0.26	Sweeping Program #35	1ST DIST	LOBO CT [1](WOLF TRAIL DR/CUL DE SAC)
11/05/2024	0.62	Sweeping Program #35	1ST DIST	SPLASHING BROOK DR [1](SWIFT RUN DR/WC
11/05/2024	0.36	Sweeping Program #35	1ST DIST	WALNUT HILL COURT [1](WOLF TRAIL DR/CU
11/05/2024	0.18	Sweeping Program #35	1ST DIST	COPPER BEECH DR [1](SWIFT RUN DR/SPLASH
11/05/2024	0.44	Sweeping Program #35	1ST DIST	SWIFT RUN DR [1](HIDDEN STREAM DR/HARF
11/05/2024	0.42	Sweeping Program #35	1ST DIST	SWIFT RUN CT [1](HIDDEN STREAM DR/CUL D
11/05/2024	0.40	Sweeping Program #35	1ST DIST	HIDDEN STREAM DR [1](RT 7/HIDDEN STREAM
11/05/2024	0.24	Sweeping Program #35	1ST DIST	HIDDEN STREAM CT [1](HIDDEN STREAM DR/(
11/05/2024	0.13	Sweeping Program #35	1ST DIST	MISTY VALLEY CT [1](HIDDEN STREAM DR/CU
11/05/2024	1.38	Sweeping Program #35	1ST DIST	HARFORD TOWN DR [1](RT 7/BUSH ROAD)
11/05/2024	0.14	Sweeping Program #35	1ST DIST	SPRING CREEK CT [1](HARFORD TOWN DR/CU
11/05/2024	0.28	Sweeping Program #35	1ST DIST	TRAIL WOOD CT [1](HARFORD TOWN DR/CUL
11/05/2024	1.00	Sweeping Program #35	1ST DIST	BUSH RD [1](SEWELL RD/T TURN AROUND)
11/05/2024	0.28	Sweeping Program #35	1ST DIST	BUSH CT [1](HARFORD TOWN DR/CUL DE SAC
11/05/2024	0.66	Sweeping Program #35	1ST DIST	TIMOTHY DR [1](BUSH RD/CUL DE SAC)
11/05/2024	0.08	Sweeping Program #35	1ST DIST	VERNON CT [1](TIMOTHY DR/CUL DE SAC)
11/05/2024	0.60	Sweeping Program #35	1ST DIST	SHARILYNN DR [1](TIMOTHY DR/CUL DE SAC
11/05/2024	0.16	Sweeping Program #35	1ST DIST	CROSS LA [1](TIMOTHY DR/SHARILYNN DR)
11/05/2024	0.80	Sweeping Program #35	1ST DIST	SMITH LANDING COURT [1](SEWELL ROAD/CU
11/05/2024	0.26	Sweeping Program #35	1ST DIST	SKYLARK COURT(SEWELL ROAD/CUL DE SAC
11/05/2024	0.15	Sweeping Program #35	1ST DIST	THRASHER COURT(SKYLARK COURT/CUL DE S
11/06/2024	0.64	Sweeping Program #35	1ST DIST	SEARAY COURT [1](ROUTE 40/CUL DE SAC)
11/06/2024	0.20	Sweeping Program #35	1ST DIST	VIKING COURT (E) [1](MAINSHIP WAY/CUL DE
11/06/2024	0.20	Sweeping Program #35	1ST DIST	VIKING COURT (W) [1](MAINSHIP WAY/CUL DI
11/06/2024	0.12	Sweeping Program #35	1ST DIST	MAINSHIP WAY [1](SEARAY COURT/VIKING CO
11/06/2024	0.36	Sweeping Program #35	1ST DIST	SKIPJACK COURT [1](SEARAY COURT/CUL DE
11/06/2024	0.56	Sweeping Program #35	1ST DIST	B&O RD [1](ABINGDON RD/RT 40)
11/06/2024	1.66	Sweeping Program #35	1ST DIST	ABINGDON RD [1](I-95 BRIDGE/RT 40)
11/06/2024	0.90	Sweeping Program #35	1ST DIST	ABINGDON BEACH RD [1](OTTER POINT RD/T
11/06/2024	0.46	Sweeping Program #35	1ST DIST	HARFORD BOAT CLUB RD [1](OTTER POINT R
11/06/2024	0.44	Sweeping Program #35	1ST DIST	LEIGHT RD [1](OTTER POINT RD/T TURN ARO
11/06/2024	1.40	Sweeping Program #35	1ST DIST	LONG BAR HARBOR RD [1](RT 40/EAST BAKER
11/06/2024	0.58	Sweeping Program #35	1ST DIST	MARYLAND AVE [1](LONG BAR HARBOR RD/P
11/06/2024	0.36	Sweeping Program #35	1ST DIST	HILLTOP AVE [1](WASHINGTON AVE/CHRISTIN
11/06/2024	0.44	Sweeping Program #35	1ST DIST	PHILADELPHIA AVE [1](WASHINGTON AVE/DE
11/06/2024	0.22	Sweeping Program #35	1ST DIST	BAKER AVE (W) [1](LONGLEY RD/T TURN ARO

11/06/2024	0.96	Sweeping Program #35	1ST DIST	WASHINGTON AVE [1](LONG BAR HARBOR RD
11/06/2024	0.06	Sweeping Program #35	1ST DIST	BAKER AVE (W) [1](LONG BAR HARBOR RD/DE
11/12/2024	0.96	Sweeping Program #35	1ST DIST	ANCHOR DR [1](BRIDGE DR/SHORE DR)
11/12/2024	0.16	Sweeping Program #35	1ST DIST	BEACON POINT CT [1](SHORE DR/CUL DE SAC
11/12/2024	0.80	Sweeping Program #35	1ST DIST	BRIDGE DR [1](ANCHOR DR/TOWNE CENTER I
11/12/2024	0.26	Sweeping Program #35	1ST DIST	BREAKWATER CT [1](SHORE DR/CUL DE SAC)
11/12/2024	0.22	Sweeping Program #35	1ST DIST	COURT DR [1](ANCHOR DR/OLD CHURCH DR)
11/12/2024	0.24	Sweeping Program #35	1ST DIST	DRIFTWOOD CT [1](SHORE DR/CUL DE SAC)
11/12/2024	4.50	Sweeping Program #35	1ST DIST	JOPPA FARM RD (S) [1](RT 40/HAVERHILL RD)
11/12/2024	0.06	Sweeping Program #35	1ST DIST	MONTEREY CT [1](OLD SOUND DR/CUL DE SA
11/12/2024	0.92	Sweeping Program #35	1ST DIST	NEPTUNE DR [1](ANCHOR DR/NEPTUNE DR)
11/12/2024	0.16	Sweeping Program #35	1ST DIST	OLD CHURCH DR [1](COURT RD/NEPTUNE DR
11/12/2024	0.74	Sweeping Program #35	1ST DIST	OLD SOUND RD [1](NEPTUNE DR/BRIDGE DR)
11/12/2024	2.16	Sweeping Program #35	1ST DIST	SHORE DRIVE [1](JOPPA FARM RD/ANCHOR DI
11/12/2024	0.26	Sweeping Program #35	1ST DIST	RAVENSWOOD CT [1](SHORE DR/CUL DE SAC)
11/12/2024	0.24	Sweeping Program #35	1ST DIST	SHELL COVE CT [1](SHORE DR/CUL DE SAC)
11/12/2024	0.10	Sweeping Program #35	1ST DIST	STONE HARBOR CT [1](SHORE DR/CUL DE SA
11/12/2024	2.80	Sweeping Program #35	1ST DIST	TOWNE CENTER DR [1](JOPPA FARM RD/SHOR
11/13/2024	2.50	Sweeping Program #35	1ST DIST	JOPPA FARM RD (S) [1](RT 40/HAVERHILL RD)
11/13/2024	1.25	Sweeping Program #35	1ST DIST	OLD SOUND RD [1](NEPTUNE DR/BRIDGE DR)
11/13/2024	1.25	Sweeping Program #35	1ST DIST	SHORE DRIVE [1](ANCHOR DRIVE/CUL-DE-SA
11/13/2024	2.80	Sweeping Program #35	1ST DIST	TOWNE CENTER DR [1](JOPPA FARM RD/SHOR
11/13/2024	1.00	Sweeping Program #35	1ST DIST	BRIDGE DR [1](ANCHOR DR/TOWNE CENTER I
11/14/2024	0.90	Sweeping Program #35	1ST DIST	STILLMEADOW DR [1](JOPPA FARM RD/HAVEF
11/14/2024	0.26	Sweeping Program #35	1ST DIST	SPRINGDALE CT [1](FOSTER KNOLL DR/CUL I
11/14/2024	0.48	Sweeping Program #35	1ST DIST	LATIMER RD [1](KEARNEY DR/GARNETT RD)
11/14/2024	0.34	Sweeping Program #35	1ST DIST	KEMPER RD [1](KEARNEY DR/GARNETT RD)
11/14/2024	0.22	Sweeping Program #35	1ST DIST	ROSECREST CT [1](FOSTER KNOLL DR/CUL DI
11/14/2024	0.28	Sweeping Program #35	1ST DIST	KANE CT [1](KEMPER RD/CUL DE SAC)
11/14/2024	0.06	Sweeping Program #35	1ST DIST	BELFAST CT [1](SPRINGDALE CT/CUL DE SAC)
11/14/2024	1.58	Sweeping Program #35	1ST DIST	GARNETT RD [1](TRIMBLE RD/CUL DE SAC)
11/14/2024	0.12	Sweeping Program #35	1ST DIST	TRAILS WAY(FOSTER KNOLL DRIVE/CDS / ISL/
11/14/2024	0.12	Sweeping Program #35	1ST DIST	KIMBALL CT [1](KEMPER RD/CUL DE SAC)
11/14/2024	0.10	Sweeping Program #35	1ST DIST	KENYON CT [1](BURNSIDE CT/CUL DE SAC)
11/14/2024	0.24	Sweeping Program #35	1ST DIST	FOSTER KNOLL DR EXT [1](FOSTER KNOLL D
11/14/2024	0.42	Sweeping Program #35	1ST DIST	RIPPLEWOOD RD [1](HAVERHILL RD/STILLME
11/14/2024	0.20	Sweeping Program #35	1ST DIST	KERSHAW CT [1](KERSHAW RD/CDS TO CDS)
11/14/2024	0.20	Sweeping Program #35	1ST DIST	KEARNEY DR [1](JOPPA FARM RD/END CO MA
11/14/2024	0.75	Sweeping Program #35	1ST DIST	JOPPA FARM RD (S) [1](RT 40/HAVERHILL RD)
11/14/2024	0.64	Sweeping Program #35	1ST DIST	CHELL RD [1](DONCASTER RD/DONCASTER R
11/14/2024	0.06	Sweeping Program #35	1ST DIST	CANBY CT [1](CHELL RD/CUL DE SAC)
11/14/2024	0.06	Sweeping Program #35	1ST DIST	CURRY CT [1](CHELL RD/CUL DE SAC)
11/14/2024	0.06	Sweeping Program #35	1ST DIST	DALLAS CT [1](DONCASTER RD/CUL DE SAC)
11/14/2024	1.06	Sweeping Program #35	1ST DIST	DONCASTER RD [1](JOPPA FARM RD/DURYEA
11/14/2024	0.06	Sweeping Program #35	1ST DIST	DREW CT [1](DONCASTER RD/CUL DE SAC)
11/14/2024	2.00	Sweeping Program #35	1ST DIST	JOPPA RD (N) [1](RT 7/RT 40)
11/14/2024	2.00	Sweeping Program #35	1ST DIST	SHORE DRIVE [1](ANCHOR DRIVE/CUL-DE-SA

Public Works - Bureau of Highways

Work Order Master Report

11/15/2024	0.90	Sweeping Program #35	1ST DIST	STILLMEADOW DR [1](JOPPA FARM RD/HAVEF
11/15/2024	0.26	Sweeping Program #35	1ST DIST	AVEDON CT [1](STILLMEADOW DR/CUL DE SA
11/15/2024	0.48	Sweeping Program #35	1ST DIST	ROXBURY CT [1](STILLMEADOW DR/CUL DE S
11/15/2024	0.40	Sweeping Program #35	1ST DIST	BLACKBURN CT [1](STILLMEADOW DR/CUL D
11/15/2024	0.90	Sweeping Program #35	1ST DIST	CHIMNEY OAK DR [1](CUL DE SAC/T TURN AR
11/15/2024	0.20	Sweeping Program #35	1ST DIST	OAKWAY CT [1](CHIMNEY OAK DR/CUL DE SA
11/15/2024	0.48	Sweeping Program #35	1ST DIST	BRITTANY DR [1](CHIMNEY OAK DR/T TURN A
11/15/2024	0.60	Sweeping Program #35	1ST DIST	ARMADA CT [1](BRITTANY DR/CUL DE SAC)
11/15/2024	2.54	Sweeping Program #35	1ST DIST	HAVERHILL RD [1](TRIMBLE RD/END OF MAIN
11/15/2024	0.12	Sweeping Program #35	1ST DIST	RAMSEY COURT [1](HAVERHILL ROAD/CUL DE
11/15/2024	0.26	Sweeping Program #35	1ST DIST	BURNSIDE CT [1](STILLMEADOW DR/CUL DE S
11/15/2024	0.10	Sweeping Program #35	1ST DIST	KENYON CT [1](BURNSIDE CT/CUL DE SAC)
11/15/2024	0.20	Sweeping Program #35	1ST DIST	BERKSHIRE CT [1](HAVERHILL RD/CUL DE SAC
11/15/2024	0.42	Sweeping Program #35	1ST DIST	RIPPLEWOOD RD [1](HAVERHILL RD/STILLME
11/15/2024	0.20	Sweeping Program #35	1ST DIST	SHEFFIELD CT [1](RIPPLEWOOD RD/CUL DE S.
11/15/2024	0.20	Sweeping Program #35	1ST DIST	SUMMERFIELD CT [1](RIPPLEWOOD RD/CUL I
11/15/2024	0.50	Sweeping Program #35	1ST DIST	JOPPA FARM RD (N) [1](RT 40/RT 7)
11/15/2024	0.48	Sweeping Program #35	1ST DIST	DURYEA DR [1](JOPPA FARM RD/DEAD END)
11/15/2024	0.76	Sweeping Program #35	1ST DIST	FERGUSON RD [1](FALCONER RD/DURYEA DR
11/15/2024	0.36	Sweeping Program #35	1ST DIST	FOXWELL RD [1](FITZHUGH RD/FERGUSON RI
11/15/2024	0.80	Sweeping Program #35	1ST DIST	FALCONER RD [1](DURYEA DR/JOPPA FARM RI
11/15/2024	0.32	Sweeping Program #35	1ST DIST	FITZHUGH RD [1](JOPPA FARM RD/FALCONER
11/15/2024	0.10	Sweeping Program #35	1ST DIST	FUNSTEN CT [1](FALCONER RD/CUL DE SAC)
11/15/2024	0.06	Sweeping Program #35	1ST DIST	FRAZIER CT [1](FERGUSON RD/CUL DE SAC)
11/15/2024	0.90	Sweeping Program #35	1ST DIST	RIVIERA DR [1](JOPPA FARM RD/KEARNEY DR
11/15/2024	0.94	Sweeping Program #35	1ST DIST	HASLETT RD [1](GARNETT RD/RIVERIA DR)
11/15/2024	1.00	Sweeping Program #35	1ST DIST	JOPPA FARM RD [1](FT HOYLE RD/CLIPPER RD
11/18/2024	1.88	Sweeping Program #35	1ST DIST	TRIMBLE RD (W) [1](JOPPA RD/JOPPA FARM RI
11/18/2024	0.36	Sweeping Program #35	1ST DIST	MARINER RD [1](TRIMBLE RD/ENFIELD RD)
11/18/2024	1.68	Sweeping Program #35	1ST DIST	ENFIELD RD [1](RT 40/CUL DE SAC)
11/18/2024	0.16	Sweeping Program #35	1ST DIST	STONE CT [1](ENFIELD RD/CUL DE SAC)
11/18/2024	0.48	Sweeping Program #35	1ST DIST	JOPPA CROSSING CT [1](ENFIELD RD/CUL DE S
11/18/2024	0.70	Sweeping Program #35	1ST DIST	ERWIN DR [1](TRIMBLE RD/ENFIELD RD)
11/18/2024	0.72	Sweeping Program #35	1ST DIST	ENSOR CT [1](ENSOR DR/CUL DE SAC)
11/18/2024	0.60	Sweeping Program #35	1ST DIST	EMMERICK DR [1](TRIMBLE RD/ENFIELD RD)
11/18/2024	0.62	Sweeping Program #35	1ST DIST	ECKHART CT [1](ECKHART DR/CUL DE SAC)
11/18/2024	0.10	Sweeping Program #35	1ST DIST	ECHOLS CT [1](ECKHART DR/CUL DE SAC)
11/18/2024	0.08	Sweeping Program #35	1ST DIST	ERICKSON CT [1](ECKHART DR/CUL DE SAC)
11/18/2024	0.44	Sweeping Program #35	1ST DIST	OAK AVE [1](RT 40/END MAINT)
11/18/2024	0.84	Sweeping Program #35	1ST DIST	PINE RD [1](RT 40/END MAINT)
11/18/2024	0.14	Sweeping Program #35	1ST DIST	BARRYS LA [1](PINE RD/WEISSER CT)
11/18/2024	0.16	Sweeping Program #35	1ST DIST	WIESSER CT [1](BARRYS LA/CUL DE SAC)
11/18/2024	0.70	Sweeping Program #35	1ST DIST	JOPPA RD (N) [1](RT 7/RT 40)
11/19/2024	0.26	Sweeping Program #35	1ST DIST	BROOKE CT [1](MAGNOLIA RIDGE/CUL DE SAC
11/19/2024	1.28	Sweeping Program #35	1ST DIST	DEMBYTOWN RD [1](TRIMBLE RD/T TURN AR
11/19/2024	0.16	Sweeping Program #35	1ST DIST	ELK COURT(POTOMAC ROAD/T-TURN AROUNI
11/19/2024	0.50	Sweeping Program #35	1ST DIST	FALCONBRIDGE DR [1](TRIMBLE RD/TRIMBLI

11/19/2024	2.44	Sweeping Program #35	1ST DIST	FORT HOYLE RD [1](TRIMBLE RD/RT 152)
11/19/2024	0.64	Sweeping Program #35	1ST DIST	FOSTER BRANCH RD [1](TRIMBLE RD/END OF
11/19/2024	0.34	Sweeping Program #35	1ST DIST	MAGNOLIA RIDGE DR [1](TRIMBLE RD/DEAD
11/19/2024	0.65	Sweeping Program #35	1ST DIST	POTOMAC ROAD(515 POTOMAC ROAD/CIRCLE
11/19/2024	0.20	Sweeping Program #35	1ST DIST	SHENANDOAH COURT [1](ROGERS FORD LANI
11/19/2024	4.00	Sweeping Program #35	1ST DIST	TRIMBLE RD (C) [1](GARNETT RD/JOPPA RD)
11/19/2024	0.68	Sweeping Program #35	1ST DIST	ROGERS FORD LANE [1](TRIMBLE ROAD/UNKI
11/19/2024	0.36	Sweeping Program #35	1ST DIST	WOODMONT CT [1](MAGNOLIA RIDGE/CUL DI
11/20/2024	0.34	Sweeping Program #35	1ST DIST	ARMSTRONG ST [1](MC CANN ST/BROWN ST)
11/20/2024	0.20	Sweeping Program #35	1ST DIST	BROWN ST [1](WEBSTER ST/STARR ST)
11/20/2024	0.18	Sweeping Program #35	1ST DIST	EASTFIELDS WAY [1](TRIMBLE FIELDS DR/SOU
11/20/2024	0.46	Sweeping Program #35	1ST DIST	FULFILLMENT DR [1](TRIMBLE RD/CUL DE SA
11/20/2024	0.40	Sweeping Program #35	1ST DIST	GRAYMOUNT WAY [1](TURQUOISE CIRCLE/CI
11/20/2024	0.60	Sweeping Program #35	1ST DIST	MCCANN ST [1](TRIMBLE RD/NUTTAL AVE (E)
11/20/2024	0.20	Sweeping Program #35	1ST DIST	MORGAN ST [1](STARR ST/WEBSTER ST)
11/20/2024	1.26	Sweeping Program #35	1ST DIST	NUTTAL AVE (E) [1](RT 755/DEAD END)
11/20/2024	1.04	Sweeping Program #35	1ST DIST	NUTTAL AVE (W) [1](TRIMBLE RD/OLD NUTTA
11/20/2024	0.32	Sweeping Program #35	1ST DIST	OLD NUTTAL AVE [1](NUTTAL AVE (W)/NUTTA
11/20/2024	0.30	Sweeping Program #35	1ST DIST	ROCKWELL ST [1](WEBSTER ST/STARR ST)
11/20/2024	0.24	Sweeping Program #35	1ST DIST	SEVERN WAY [1](TRIMBLE ROAD/SEVERN WA
11/20/2024	0.34	Sweeping Program #35	1ST DIST	STARR ST [1](MC CANN ST/ROCKWELL ST)
11/20/2024	0.06	Sweeping Program #35	1ST DIST	SOUTHRIDGE CT [1](SOUTHRIDGE DR/CUL DE
11/20/2024	0.56	Sweeping Program #35	1ST DIST	SOUTHRIDGE DR [1](TRIMBLE RD/CUL DE SAC
11/20/2024	0.14	Sweeping Program #35	1ST DIST	NORTHFIELDS COURT [1](EASTFIELDS WAY/C
11/20/2024	0.46	Sweeping Program #35	1ST DIST	TRIMBLE FIELDS DRIVE [1](TRIMBLE ROAD/C
11/20/2024	0.22	Sweeping Program #35	1ST DIST	TURQUOISE CIRCLE(TRIMBLE ROAD/CIRCLE)
11/20/2024	2.00	Sweeping Program #35	1ST DIST	TRIMBLE RD (E) [1](RT 755/GARNETT RD)
11/20/2024	0.16	Sweeping Program #35	1ST DIST	BUSH CT [1](HARFORD TOWN DR/CUL DE SAC
11/20/2024	0.18	Sweeping Program #35	1ST DIST	COYOTE CT [1](WOLF TRAIL DR/CUL DE SAC)
11/20/2024	1.30	Sweeping Program #35	1ST DIST	HARFORD TOWN DR [1](RT 7/BUSH ROAD)
11/20/2024	0.42	Sweeping Program #35	1ST DIST	HIDDEN STREAM DR [1](RT 7/HIDDEN STREAM
11/20/2024	0.20	Sweeping Program #35	1ST DIST	HIDDEN STREAM CT [1](HIDDEN STREAM DR/(
11/20/2024	0.24	Sweeping Program #35	1ST DIST	HANDLIR DR [1](RT 7/CUL DE SAC)
11/20/2024	0.16	Sweeping Program #35	1ST DIST	COPPER BEECH DR [1](SWIFT RUN DR/SPLASH
11/20/2024	0.38	Sweeping Program #35	1ST DIST	HIDDEN BROOK CT [1](ROUTE 7/CUL DE SAC)
11/20/2024	0.10	Sweeping Program #35	1ST DIST	MISTY VALLEY CT [1](HIDDEN STREAM DR/CU
11/20/2024	0.24	Sweeping Program #35	1ST DIST	LOBO CT [1](WOLF TRAIL DR/CUL DE SAC)
11/20/2024	0.60	Sweeping Program #35	1ST DIST	SPLASHING BROOK DR [1](SWIFT RUN DR/WC
11/20/2024	0.12	Sweeping Program #35	1ST DIST	SPRING CREEK CT [1](HARFORD TOWN DR/CU
11/20/2024	0.38	Sweeping Program #35	1ST DIST	SWIFT RUN CT [1](HIDDEN STREAM DR/CUL D
11/20/2024	0.44	Sweeping Program #35	1ST DIST	SWIFT RUN DR [1](HIDDEN STREAM DR/HARF
11/20/2024	0.26	Sweeping Program #35	1ST DIST	TRAIL WOOD CT [1](HARFORD TOWN DR/CUL
11/20/2024	0.34	Sweeping Program #35	1ST DIST	WALNUT HILL COURT [1](WOLF TRAIL DR/CU
11/20/2024	0.90	Sweeping Program #35	1ST DIST	WOLF TRAIL DRIVE [1](HARFORD TOWN DR/S
11/21/2024	0.12	Sweeping Program #35	1ST DIST	BAGNELL COURT [1](BROADNECK CROSSING
11/21/2024	0.28	Sweeping Program #35	1ST DIST	BAGNELL ROAD [1](BROADNECK CROSSING R
11/21/2024	0.10	Sweeping Program #35	1ST DIST	BOURNE WAY [1](BROADNECK CROSSING WA



Public Works - Bureau of Highways

Work Order Master Report

11/21/2024	1.80	Sweeping Program #35	1ST DIST	BROADNECK CROSSING RD [1](WILLOUGHBY
11/21/2024	0.18	Sweeping Program #35	1ST DIST	CAPTAINS COVE COURT [1](WILLOUGHBYS W
11/21/2024	0.14	Sweeping Program #35	1ST DIST	CANOE LANE [1](INDIANS LAIR/CUL DE SAC)
11/21/2024	0.12	Sweeping Program #35	1ST DIST	CROWN CI [1](BROADNECK CROSSING RD/BR
11/21/2024	0.32	Sweeping Program #35	1ST DIST	BEAVER CROSSING ROAD [1](BROADNECK CR
11/21/2024	0.12	Sweeping Program #35	1ST DIST	HERITAGE THRONE WAY [1](MAIDENS LANE/(
11/21/2024	0.24	Sweeping Program #35	1ST DIST	INDIAN'S LAIR [1](BROADNECK CROSSING RD
11/21/2024	0.14	Sweeping Program #35	1ST DIST	KEALE WAY [1](BROADNECK CROSSING RD/C
11/21/2024	0.08	Sweeping Program #35	1ST DIST	KING JAMES CI [1](BROADNECK CROSSING RI
11/21/2024	0.50	Sweeping Program #35	1ST DIST	LORD WILLOUGHBY WAY [1](WILLOUGHBY B
11/21/2024	0.20	Sweeping Program #35	1ST DIST	MAJESTY LN [1](BROADNECK CROSSING RD/(
11/21/2024	0.78	Sweeping Program #35	1ST DIST	OAK ST [1](WILLOUGHBY BEACH RD/T TURN
11/21/2024	0.36	Sweeping Program #35	1ST DIST	PINE ST [1](RT 755/DEAD END)
11/21/2024	0.36	Sweeping Program #35	1ST DIST	PROFITT PATH [1](WILLOUGHBYS WAY/CUL D
11/21/2024	0.24	Sweeping Program #35	1ST DIST	TODKILL TRACE [1](WILLOUGHBYS WAY/CUL
11/21/2024	2.25	Sweeping Program #35	1ST DIST	WILLOUGHBY BEACH RD [1](TRIMBLE RD/KE
11/25/2024	0.74	Sweeping Program #35	1ST DIST	AHERN DRIVE [1](WILLOUGHBY BEACH ROAI
11/25/2024	1.02	Sweeping Program #35	1ST DIST	ALBANTOWNE WAY [1](WILLOUGHBY BEACH
11/25/2024	0.34	Sweeping Program #35	1ST DIST	ANCON COURT [1](AHERN DRIVE/CUL DE SAC
11/25/2024	0.10	Sweeping Program #35	1ST DIST	IRIS DR [1](LABURNUM RD/WINTERBERRY DI
11/25/2024	1.24	Sweeping Program #35	1ST DIST	LABURNUM RD [1](WILLOUGHBY BEACH RD/
11/25/2024	0.08	Sweeping Program #35	1ST DIST	LASONIA CT [1](ALBANTOWNE WAY/CUL DE S
11/25/2024	0.20	Sweeping Program #35	1ST DIST	LANSDOWNE CT [1](ALBANTOWNE WAY/CUL
11/25/2024	0.10	Sweeping Program #35	1ST DIST	LILAC CT [1](WINTERBERRY DR/CUL DE SAC)
11/25/2024	0.40	Sweeping Program #35	1ST DIST	MAHONIA WAY [1](REDBUD RD/SIWANOY DR)
11/25/2024	0.60	Sweeping Program #35	1ST DIST	PALMETTO DR [1](REDBUD RD/REDBUD RD)
11/25/2024	0.72	Sweeping Program #35	1ST DIST	REDBUD RD [1](SWEETBAY DR/LABURNUM R
11/25/2024	0.24	Sweeping Program #35	1ST DIST	SEABROOK CT [1](ALBANTOWNE WAY/CUL D
11/25/2024	1.02	Sweeping Program #35	1ST DIST	SIWANOY DRIVE [1](AHERN DRIVE/CUL DE SA
11/25/2024	1.28	Sweeping Program #35	1ST DIST	WINTERBERRY DR [1](LABURNUM RD/WINTE
11/25/2024	0.08	Sweeping Program #35	1ST DIST	WINTERBERRY CT [1](WINTERBERRY DR/CUL
11/25/2024	0.12	Sweeping Program #35	1ST DIST	YOST COURT [1](AHERN DRIVER/CUL DE SAC
11/25/2024	1.00	Sweeping Program #35	1ST DIST	WILLOUGHBY BEACH RD [1](TRIMBLE RD/KE
12/02/2024	0.14	Sweeping Program #35	1ST DIST	BARRYS LA [1](PINE RD/WEISSER CT)
12/02/2024	0.10	Sweeping Program #35	1ST DIST	ECHOLS CT [1](ECKHART DR/CUL DE SAC)
12/02/2024	0.04	Sweeping Program #35	1ST DIST	ECKHART CT [1](ECKHART DR/CUL DE SAC)
12/02/2024	0.60	Sweeping Program #35	1ST DIST	EMMERICK DR [1](TRIMBLE RD/ENFIELD RD)
12/02/2024	0.72	Sweeping Program #35	1ST DIST	ENSOR DR [1](ERWIN DR/ENFIELD RD)
12/02/2024	0.08	Sweeping Program #35	1ST DIST	ERICKSON CT [1](ECKHART DR/CUL DE SAC)
12/02/2024	1.68	Sweeping Program #35	1ST DIST	ENFIELD RD [1](RT 40/CUL DE SAC)
12/02/2024	0.70	Sweeping Program #35	1ST DIST	ERWIN DR [1](TRIMBLE RD/ENFIELD RD)
12/02/2024	0.48	Sweeping Program #35	1ST DIST	JOPPA CROSSING CT [1](ENFIELD RD/CUL DE S
12/02/2024	0.44	Sweeping Program #35	1ST DIST	JOPPA CROSSING WAY [1](ENFIELD RD/JOPPA (
12/02/2024	0.92	Sweeping Program #35	1ST DIST	JOPPA RD (N) [1](RT 7/RT 40)
12/02/2024	0.44	Sweeping Program #35	1ST DIST	OAK AVE [1](RT 40/END MAINT)
12/02/2024	0.84	Sweeping Program #35	1ST DIST	PINE AVENUE [1](POPLAR GROVE AVE/OAKDA
12/02/2024	0.16	Sweeping Program #35	1ST DIST	STONE CT [1](ENFIELD RD/CUL DE SAC)

Public Works - Bureau of Highways

Work Order Master Report

12/02/2024	0.88	Sweeping Program #35	1ST DIST	TRIMBLE RD (W) [1](JOPPA RD/JOPPA FARM RI
12/02/2024	0.16	Sweeping Program #35	1ST DIST	WIESSER CT [1](BARRYS LA/CUL DE SAC)
12/03/2024	1.36	Sweeping Program #35	1ST DIST	DEMBYTOWN RD [1](TRIMBLE RD/T TURN AR
12/03/2024	2.42	Sweeping Program #35	1ST DIST	FORT HOYLE RD [1](TRIMBLE RD/RT 152)
12/03/2024	0.50	Sweeping Program #35	1ST DIST	FALCONBRIDGE DR [1](TRIMBLE RD/TRIMBLI
12/03/2024	0.24	Sweeping Program #35	1ST DIST	BROOKE CT [1](MAGNOLIA RIDGE/CUL DE SAC
12/03/2024	0.20	Sweeping Program #35	1ST DIST	WHITE PINE LA [1](MAGNOLIA RIDGE/WOODN
12/03/2024	0.34	Sweeping Program #35	1ST DIST	WOODMONT CT [1](MAGNOLIA RIDGE/CUL DI
12/03/2024	0.34	Sweeping Program #35	1ST DIST	MAGNOLIA RIDGE DR [1](TRIMBLE RD/DEAD
12/03/2024	0.28	Sweeping Program #35	1ST DIST	TERRAPIN TERRACE [1](TRIMBLE ROAD (W)/T
12/03/2024	2.44	Sweeping Program #35	1ST DIST	FOSTER BRANCH RD [1](TRIMBLE RD/END OF
12/03/2024	0.64	Sweeping Program #35	1ST DIST	ROGERS FORD LANE [1](TRIMBLE ROAD/UNKT
12/03/2024	0.20	Sweeping Program #35	1ST DIST	SHENANDOAH COURT [1](ROGERS FORD LANI
12/03/2024	0.14	Sweeping Program #35	1ST DIST	POTOMAC ROAD(515 POTOMAC ROAD/CIRCLE
12/03/2024	0.36	Sweeping Program #35	1ST DIST	POTOMAC ROAD(ROGERS FORD LANE/515 POT
12/03/2024	0.20	Sweeping Program #35	1ST DIST	ELK COURT(POTOMAC ROAD/T-TURN AROUNI
12/03/2024	0.30	Sweeping Program #35	1ST DIST	CLIPPER DR [1](JOPPA FARM RD/FT HOYLE RD
12/03/2024	0.24	Sweeping Program #35	1ST DIST	WINGSAIL CT [1](CLIPPER DR/CUL DE SAC W/
12/03/2024	0.30	Sweeping Program #35	1ST DIST	STAYSAIL DR [1](CLIPPER RD/CUL DE SAC W/I
12/03/2024	2.00	Sweeping Program #35	1ST DIST	TRIMBLE RD (E) [1](RT 755/GARNETT RD)
12/03/2024	1.00	Sweeping Program #35	1ST DIST	ARUM CT [1](SILVERSIDE RD/CUL DE SAC)
12/03/2024	0.18	Sweeping Program #35	1ST DIST	BLACKBIRD COURT [1](KINGFISHER RD/CUL D
12/03/2024	0.12	Sweeping Program #35	1ST DIST	BLUE HERON COURT [1](KINGFISHER RD/CUL
12/03/2024	0.12	Sweeping Program #35	1ST DIST	BLUEBERRY CT [1](SILVERSIDE RD/CUL DE SA
12/03/2024	0.22	Sweeping Program #35	1ST DIST	CASPIAN COURT [1](OTTER CREEK ROAD/CUI
12/03/2024	0.46	Sweeping Program #35	1ST DIST	CRESTWOOD CT [1](CRESTWOOD DR/DEAD EN
12/03/2024	0.68	Sweeping Program #35	1ST DIST	FREYS ROAD [1](WILLOUGHBY BEACH RD/EN
12/03/2024	0.08	Sweeping Program #35	1ST DIST	GOLDENEYE COURT [1](OTTER CREEK ROAD/
12/03/2024	1.00	Sweeping Program #35	1ST DIST	FLYING POINT RD [1](WILLOUGHBY BEACH R
12/03/2024	0.28	Sweeping Program #35	1ST DIST	KINGFISHER ROAD [1](FREYS ROAD/CASPIAN
12/03/2024	1.50	Sweeping Program #35	1ST DIST	KENNARD AVE [1](FLYING POINT PARK/END C
12/04/2024	0.30	Sweeping Program #35	1ST DIST	STARR ST [1](MC CANN ST/ROCKWELL ST)
12/04/2024	0.16	Sweeping Program #35	1ST DIST	MORGAN ST [1](STARR ST/WEBSTER ST)
12/04/2024	0.16	Sweeping Program #35	1ST DIST	BROWN ST [1](WEBSTER ST/STARR ST)
12/04/2024	0.20	Sweeping Program #35	1ST DIST	WEBSTER ST [1](TRIMBLE RD/BROWN ST)
12/04/2024	0.22	Sweeping Program #35	1ST DIST	ROCKWELL ST [1](WEBSTER ST/STARR ST)
12/04/2024	0.34	Sweeping Program #35	1ST DIST	ARMSTRONG ST [1](MC CANN ST/BROWN ST)
12/04/2024	0.60	Sweeping Program #35	1ST DIST	MCCANN ST [1](TRIMBLE RD/NUTTAL AVE (E)
12/04/2024	0.72	Sweeping Program #35	1ST DIST	OLD NUTTAL AVE [1](NUTTAL AVE (W)/NUTTA
12/04/2024	1.04	Sweeping Program #35	1ST DIST	NUTTAL AVE (E) [1](RT 755/DEAD END)
12/04/2024	0.46	Sweeping Program #35	1ST DIST	FULFILLMENT DR [1](TRIMBLE RD/CUL DE SA
12/04/2024	0.08	Sweeping Program #35	1ST DIST	SOUTHRIDGE CT [1](SOUTHRIDGE DR/CUL DE
12/04/2024	0.68	Sweeping Program #35	1ST DIST	SOUTHRIDGE DR [1](TRIMBLE RD/CUL DE SAC
12/04/2024	0.16	Sweeping Program #35	1ST DIST	EASTFIELDS WAY [1](TRIMBLE FIELDS DR/SOU
12/04/2024	0.16	Sweeping Program #35	1ST DIST	NORTHFIELDS COURT [1](EASTFIELDS WAY/C
12/04/2024	0.48	Sweeping Program #35	1ST DIST	TRIMBLE FIELDS DRIVE [1](TRIMBLE ROAD/C
12/04/2024	0.24	Sweeping Program #35	1ST DIST	SEVERN WAY [1](TRIMBLE ROAD/SEVERN WA

12/04/2024	0.40	Sweeping Program #35	1ST DIST	GRAYMOUNT WAY [1](TURQUOISE CIRCLE/CI
12/04/2024	0.22	Sweeping Program #35	1ST DIST	TURQUOISE CIRCLE(TRIMBLE ROAD/CIRCLE)
12/04/2024	1.00	Sweeping Program #35	1ST DIST	TRIMBLE RD (E) [1](RT 755/GARNETT RD)
12/09/2024	1.14	Sweeping Program #35	1ST DIST	BANEBERRY DR [1](CHURCH CREEK RD/RT 7)
12/09/2024	2.74	Sweeping Program #35	1ST DIST	CHURCH CREEK RD [1](RIVERSIDE PKWY/RIV
12/09/2024	1.10	Sweeping Program #35	1ST DIST	DECLARATION CIR [1](CHURCH CREEK RD/CH
12/09/2024	0.24	Sweeping Program #35	1ST DIST	CARLYLE GARTH [1](GREY'S RUN CIR/GREY'S
12/09/2024	0.24	Sweeping Program #35	1ST DIST	DOWERY LA [1](GREY'S RUN CIR/CUL DE SAC
12/09/2024	0.34	Sweeping Program #35	1ST DIST	ASHMEAD SQUARE [1](GREY'S RUN CI/ASHME
12/09/2024	0.88	Sweeping Program #35	1ST DIST	FOXGLOVE CT [1](CHURCH CREEK RD/CUL DI
12/09/2024	1.76	Sweeping Program #35	1ST DIST	GREY'S RUN CIR [1](CHURCH CREEK RD/CHUI
12/09/2024	0.50	Sweeping Program #35	1ST DIST	HAMPTON HALL CT [1](GREY'S RUN CIR/HAM
12/09/2024	0.10	Sweeping Program #35	1ST DIST	MAGNESS CT [1](GREYS RUN CI/MAGNESS CT
12/09/2024	0.08	Sweeping Program #35	1ST DIST	LYTLE WAY [1](GREYS RUN CI/CUL DE SAC)
12/12/2024	0.16	Sweeping Program #35	1ST DIST	AHOY CT [1](WEST SHORE DR/WEST SHORE I
12/12/2024	0.22	Sweeping Program #35	1ST DIST	ANGEL DR [1](FRANS DR (N)/T TURN AROUND
12/12/2024	0.90	Sweeping Program #35	1ST DIST	ABINGDON BEACH RD [1](OTTER POINT RD/T
12/12/2024	0.68	Sweeping Program #35	1ST DIST	BECKON DR [1](WEST SHORE DR/LAKE FRON
12/12/2024	0.92	Sweeping Program #35	1ST DIST	FRANS DR (N) [1](LONGLEY RD/PAMELA DR)
12/12/2024	0.30	Sweeping Program #35	1ST DIST	LAKE FRONT DR [1](BECKON DR/WILLOW BE
12/12/2024	1.30	Sweeping Program #35	1ST DIST	LONGLEY RD (W) [1](LONG BAR HARBOR RD/
12/12/2024	1.50	Sweeping Program #35	1ST DIST	OTTER POINT RD [1](RT 40/END MAINT)
12/12/2024	0.52	Sweeping Program #35	1ST DIST	PIRATES CT [1](BECKON DR/END MAINT - NE
12/12/2024	0.24	Sweeping Program #35	1ST DIST	SAND PEBBLE DR [1](RT 40/BECKON DR)
12/12/2024	0.64	Sweeping Program #35	1ST DIST	SEARAY COURT [1](ROUTE 40/CUL DE SAC)
12/12/2024	0.34	Sweeping Program #35	1ST DIST	SKIPJACK COURT [1](SEARAY COURT/CUL DE
12/12/2024	0.12	Sweeping Program #35	1ST DIST	ST ALBANS CT [1](LONGLEY RD/CUL DE SAC)
12/12/2024	0.10	Sweeping Program #35	1ST DIST	ST SEBASTIAN CT [1](FRANS DR (S)/CUL DE S
12/12/2024	0.24	Sweeping Program #35	1ST DIST	STARBOARD DR [1](WEST SHORE DR/PIRATES
12/12/2024	0.38	Sweeping Program #35	1ST DIST	VIKING COURT (E) [1](MAINSHIP WAY/CUL DE
12/12/2024	0.76	Sweeping Program #35	1ST DIST	WEST SHORE DR [1](RT 40/PIRATES CT)
12/12/2024	0.20	Sweeping Program #35	1ST DIST	WILLOW BEND DR [1](LAKE FRONT DR/DEAD
12/12/2024	0.14	Sweeping Program #35	1ST DIST	MAINSHIP WAY [1](SEARAY COURT/VIKING C
04/28/2025	0.06	Sweeping Program #35	1ST DIST	CHERRY CT [1](HANSON RD/CUL DE SAC)
04/28/2025	0.34	Sweeping Program #35	1ST DIST	TUPELO RD [1](BAYBERRY RD/CUL DE SAC)
04/28/2025	0.12	Sweeping Program #35	1ST DIST	TULIP CT [1](JUNIPER RD/CUL DE SAC)
04/28/2025	1.10	Sweeping Program #35	1ST DIST	BAYBERRY RD [1](HANSON RD (N&S)/RT 755)
04/28/2025	0.08	Sweeping Program #35	1ST DIST	GREENBRIER CT [1](BAYBERRY RD/CUL DE S
04/28/2025	0.10	Sweeping Program #35	1ST DIST	HAREWOOD CT [1](HAREWOOD RD/CUL DE S
04/28/2025	0.78	Sweeping Program #35	1ST DIST	HAREWOOD RD [1](BAYBERRY RD/DEAD END
04/28/2025	0.18	Sweeping Program #35	1ST DIST	HEMLOCK RD [1](BAYBERRY RD/HAREWOOD
04/28/2025	0.30	Sweeping Program #35	1ST DIST	HAWTHORNE RD [1](HAREWOOD RD/HAREW
04/28/2025	0.34	Sweeping Program #35	1ST DIST	JUNIPER RD [1](TUPELO RD/BAYBERRY RD)
04/28/2025	0.06	Sweeping Program #35	1ST DIST	CHERRY PL [1](TUPELO RD/CUL DE SAC)
04/28/2025	0.26	Sweeping Program #35	1ST DIST	BERG WAY [1](RT 755/CUL DE SAC)
04/28/2025	0.50	Sweeping Program #35	1ST DIST	SHORE DRIVE [1](ANCHOR DRIVE/CUL-DE-SA
04/30/2025	3.50	Sweeping Program #35	1ST DIST	WILLOUGHBY BEACH RD [1](TRIMBLE RD/KE

Public Works - Bureau of Highways

Work Order Master Report

04/30/2025 2.50 Sweeping Program #35 1ST DIST JOPPA FARM RD (S) [1](RT 40/HAVERHILL RD)

Total: 680.57

Work Order Labor, Equipment, and Material Details

ID	Description	Hours	Amount
Labor			
006314	JONES, TIMOTHY	114.15	$4,370.910
003133	ROBERTS, II, ROBIN	482.25	$24,167.700
	Total:	**596.40**	**$28,538.610**

ID	Description	Hours	Amount	Equip. Emp. ID	Equip. Emplo
Equipment					
214	2019 SWEEPER/INTERNATIONAL/WHII	43.75	$1,857.890	003133	ROBERTS, II
214	2019 SWEEPER/INTERNATIONAL/WHII	83.30	$3,537.410	006314	JONES, TIM(
215	SWEEPER 2022/PETERBILT VIN3BPPHI	12.30	$123.000	006314	JONES, TIM(
215	SWEEPER 2022/PETERBILT VIN3BPPHI	425.95	$4,259.500	003133	ROBERTS, II
	Total:	**565.30**	**$9,777.800**		

ID	Description	Quantity	Amount
Materials			
H08246	ELGIN PART/GUTTER BROOM (5 PC)	1.00	$160.000
000264	LOADS TO YARD	102.10	$0.000
000219	WATER (GALS) FOR PROJECTS/W&S H	150.00	$0.000
	Total:	**253.10**	**$160.000**
	Grand Total:	**1,414.80**	**$38,476.410**

Public Works - Bureau of Highways

Work Order Master Report

Name: **SWEEPING MAINTENANCE JULY24-JUNE25** Started: 07/01/2024 Completed: 05/19/2025

Programmed Maintenance

Date	Units	Activity	Crew	Road / Subdivision
08/28/2024	50.00	Sweeping Program #35	2ND DIST	
Cleaned in the Yard here at Shop				
09/16/2024	8.70	Sweeping Program #35	2ND DIST	
Swept Snow Route #26 Not done				
09/18/2024	7.00	Sweeping Program #35	2ND DIST	
Swept Snow Route #26 Not done				
09/19/2024	4.50	Sweeping Program #35	2ND DIST	
Sweeping Route #26 one				
09/20/2024	4.50	Sweeping Program #35	2ND DIST	
Sweeping Route #27 one				
09/30/2024	16.00	Sweeping Program #35	2ND DIST	TOLLGATE RD S [2](RING FACTORY RD/PLUMT
10/11/2024	12.50	Sweeping Program #35	2ND DIST	
Swept Route 27				
10/14/2024	12.50	Sweeping Program #35	2ND DIST	
Swept Route 27				
11/25/2024	3.00	Sweeping Program #35	2ND DIST	DIXIE DR [2](WAKELY TERR/VAUGHN AVE)
12/02/2024	1.00	Maintenance of Traffic #55	2ND DIST	DIXIE DR [2](WAKELY TERR/VAUGHN AVE)
Flagged for leaf crew				
12/02/2024	1.00	Sweeping Program #35	2ND DIST	DIXIE DR [2](WAKELY TERR/VAUGHN AVE)
Leaf Clean up				
12/03/2024	1.00	Maintenance of Traffic #55	2ND DIST	DIXIE DR [2](WAKELY TERR/VAUGHN AVE)
Flagged for leaf crew				
12/03/2024	1.00	Maintenance of Traffic #55	2ND DIST	PATTERSON MILL RD [2](ROUTE 924/TAR & CH
Flagged for leaf crew				
12/03/2024	0.25	Sweeping Program #35	2ND DIST	DIXIE DR [2](WAKELY TERR/VAUGHN AVE)
Leaf Clean up to promote proper drainage.				
12/03/2024	0.25	Sweeping Program #35	2ND DIST	PATTERSON MILL RD [2](ROUTE 924/TAR & CH
Leaf Clean up to promote proper drainage.				
12/05/2024	16.00	Maintenance of Traffic #55	2ND DIST	
Kept a safe and steady flow of traffic through the work site.				
12/05/2024	1.00	Sweeping Program #35	2ND DIST	PATTERSON MILL RD [2](WHEEL RD/BLACKTC
Removed leaves from road edges to promote proper drainage.				
12/05/2024	1.00	Sweeping Program #35	2ND DIST	LAKE FANNY RD [2](RT 1/RT 1)
Removed leaves from road edges to promote proper drainage.				
12/19/2024	16.00	Maintenance of Traffic #55	2ND DIST	TOLLGATE RD S [2](BUSINESS RT 1/RING FACT
Kept a safe and steady flow of traffic through the work site.				
12/19/2024	0.50	Sweeping Program #35	2ND DIST	TOLLGATE RD S [2](BUSINESS RT 1/RING FACT
Leaf and pine needle clean up along curb line to promote proper drainage.				
12/31/2024	16.00	Maintenance of Traffic #55	2ND DIST	RED PUMP RD [2](TOLLGATE/RT 24)
Kept a safe and steady flow of traffic through the work site.				
12/31/2024	3.00	Sweeping Program #35	2ND DIST	RED PUMP RD [2](TOLLGATE/RT 24)
Leaf and pine needle clean up along curb line to promote proper drainage.				
03/07/2025	1.00	Debris Removal #87-EM	2ND DIST	THOMAS RUN RD [2](RT 22/COOL SPRING RD)
03/07/2025	16.00	Maintenance of Traffic #55	2ND DIST	THOMAS RUN RD [2](RT 22/COOL SPRING RD)
03/10/2025	1.00	Debris Removal #87-EM	2ND DIST	

Public Works - Bureau of Highways

Work Order Master Report

03/12/2025	32.00	Drainage Structure Cleanin	2ND DIST	GLENANGUS DR [2](MACPHAIL RD/WHEEL RI
03/25/2025	87.00	Sweeping Program #35	2ND DIST	
04/16/2025	17.60	Sweeping Program #35	2ND DIST	
Did Rt 42				
04/17/2025	16.90	Sweeping Program #35	2ND DIST	
Swept on Rt 26				
04/18/2025	17.20	Sweeping Program #35	2ND DIST	
Swept on Rt 27				
04/28/2025	24.30	Sweeping Program #35	2ND DIST	
Swept on Rt 28				
05/07/2025	1.00	Sweeping Program #35	2ND DIST	
Sweeping Drain Boxes Covered in Leafs.				
05/08/2025	1.00	Sweeping Program #35	2ND DIST	
Sweeping Drain Boxes Covered in Leafs.				
05/09/2025	1.00	Sweeping Program #35	2ND DIST	PLUMTREE RD [2](BRIDGE/SOMMERVILLE RD
Swept road to clean up from storm damage.				
05/14/2025	19.80	Sweeping Program #35	2ND DIST	
Swept rt #29				
05/15/2025	8.30	Sweeping Program #35	2ND DIST	
Cleaned Rt 30				
05/16/2025	14.90	Sweeping Program #35	2ND DIST	
Swept Rt 30				
05/19/2025	12.70	Sweeping Program #35	2ND DIST	
Swept Rt #32				
Total:	**448.40**			

Public Works - Bureau of Highways

Work Order Master Report

Work Order Labor, Equipment, and Material Details

ID	Description	Hours	Amount
Labor			
006533	AMBERMAN, TRAVIS	55.00	$2,296.250
007125	ANDOOS, KRIS	17.00	$599.930
003220	BONHAM, DAVID	88.00	$2,200.000
007758	CHANEY, RYAN	56.00	$1,400.000
002950	GREENWOOD, ARTHUR	104.00	$5,211.440
007757	HAMRICK, WILLIAM	53.00	$1,430.470
007175	HEINTZ, CHRISTINE	56.00	$1,915.200
007513	IDDINGS, KOLE	24.00	$840.960
007648	LANDRETH, STEVE (RANDY)	28.00	$970.760
001219	LITTLE, KENNETH	52.00	$2,549.040
003670	NAHRGANG, ROBERT	24.00	$1,248.480
007514	TURNER, CLAYTON	44.00	$1,541.760
004295	WILDBERGER, SHANE	12.00	$535.080
	Total:	**613.00**	**$22,739.370**

ID	Description	Hours	Amount	Equip. Emp. ID	Equip. Emplo
Equipment					
313	2016 EXT CAB 4X4/FORD/F350	16.00	$198.560	007648	LANDRETH.
073	2021 FORD F350 CREW CAB/FORD/F35(	16.00	$198.560	002950	GREENWOC
073	2021 FORD F350 CREW CAB/FORD/F35(	16.00	$198.560	007513	IDDINGS, K(
073	2021 FORD F350 CREW CAB/FORD/F35(	32.00	$397.120	007175	HEINTZ, CH
223	ELGIN Whirlwind Sweeper 2020/Internatio	6.00	$254.760	007514	TURNER, CI
223	ELGIN Whirlwind Sweeper 2020/Internatio	8.00	$339.680		
223	ELGIN Whirlwind Sweeper 2020/Internatio	8.00	$339.680	007175	HEINTZ, CH
223	ELGIN Whirlwind Sweeper 2020/Internatio	8.00	$339.680	007758	CHANEY, R'
223	ELGIN Whirlwind Sweeper 2020/Internatio	12.00	$509.520	004295	WILDBERGI
223	ELGIN Whirlwind Sweeper 2020/Internatio	13.00	$551.980	006533	AMBERMAI
223	ELGIN Whirlwind Sweeper 2020/Internatio	36.00	$1,528.560	001219	LITTLE, KEI
223	ELGIN Whirlwind Sweeper 2020/Internatio	48.00	$2,038.080	002950	GREENWOC
223	ELGIN Whirlwind Sweeper 2020/Internatio	72.00	$3,057.120	003220	BONHAM, D
389	PICKUP-3/4 TON-17/FORD/F350 4X4 EX	8.00	$99.280	003670	NAHRGANG
389	PICKUP-3/4 TON-17/FORD/F350 4X4 EX	8.00	$99.280	007757	HAMRICK, \
389	PICKUP-3/4 TON-17/FORD/F350 4X4 EX	8.00	$99.280	007758	CHANEY, R'
389	PICKUP-3/4 TON-17/FORD/F350 4X4 EX	16.00	$198.560	006533	AMBERMAI

Public Works - Bureau of Highways

Work Order Master Report

		Total:	**331.00**	**$10,448.260**
ID	Description		Quantity	Amount
Materials				
000264	LOADS TO YARD		63.00	$0.000
		Total:	**63.00**	**$0.000**
		Grand Total:	**1,007.00**	**$33,187.630**

Public Works - Bureau of Highways

Work Order Master Report

Name: **SWEEPING MAJOR/MINOR JULY24-JUNE25** Started: 07/01/2024 Completed: 04/15/2025

Programmed Maintenance

Date	Units	Activity	Crew	Road / Subdivision
07/01/2024	4.00	Sweeping Program #35	2ND DIST	VALE RD [2](MACROOM CT/CARRS MILL RD)
07/01/2024	4.24	Sweeping Program #35	2ND DIST	MOORES MILL RD [2](RT 924/RT 22)
07/02/2024	3.20	Sweeping Program #35	2ND DIST	THOMAS RUN RD [2](PENNINGTON RD/COOL
07/02/2024	0.72	Sweeping Program #35	2ND DIST	SOUTHAMPTON RD [2](RT 543/MOORES MILL
07/16/2024	5.32	Sweeping Program #35	2ND DIST	PROSPECT MILL RD [2](RT 543/RT 22)
07/16/2024	2.56	Sweeping Program #35	2ND DIST	HENDERSON RD [2](RT 543/RT 1)
07/18/2024	2.28	Sweeping Program #35	2ND DIST	BYNUM RD [2](RT 1/RT 24)
07/18/2024	1.24	Sweeping Program #35	2ND DIST	WATER TOWER WAY [2](MD. RT 23/U.S. RT. 1 M
07/18/2024	8.38	Sweeping Program #35	2ND DIST	TOLLGATE RD S [2](RING FACTORY RD/PLUMT
07/19/2024	0.42	Sweeping Program #35	2ND DIST	BEL AIR SOUTH PKWY [2](RT 924/TOLLGATE R
07/19/2024	2.32	Sweeping Program #35	2ND DIST	PLUMTREE RD [2](RT 924/BRIDGE)
07/22/2024	3.50	Sweeping Program #35	2ND DIST	RING FACTORY RD (W) [2](GATE/CLOSED BRII
07/22/2024	2.82	Sweeping Program #35	2ND DIST	RING FACTORY RD (E) [2](MACPHAIL RD/RT 9
08/08/2024	6.30	Sweeping Program #35	2ND DIST	MACPHAIL RD (E) [2](RT 924/WHEEL RD)
08/08/2024	2.38	Sweeping Program #35	2ND DIST	BRIERHILL DR [2](RT 22/MAC PHAIL RD)
08/22/2024	7.20	Sweeping Program #35	2ND DIST	SCHUCKS RD [2](WHEEL RD/RT 136)
08/22/2024	9.56	Sweeping Program #35	2ND DIST	WHEEL RD [2](RT 543/SHUCKS RD)
08/29/2024	3.26	Sweeping Program #35	2ND DIST	WHITAKER MILL RD [2](RT 1/RING FACTORY F
08/29/2024	5.26	Sweeping Program #35	2ND DIST	OLD JOPPA RD (N) [2](RT 1/RT 152)
09/27/2024	5.26	Sweeping Program #35	2ND DIST	RED PUMP RD [2](TOLLGATE/RT 24)
10/14/2024	3.96	Sweeping Program #35	2ND DIST	JARRETTSVILLE RD [2](RT 1/RT 24)
10/14/2024	0.80	Sweeping Program #35	2ND DIST	COMMERCE RD [2](JARRETTSVILLE RD/ROUN
10/15/2024	2.56	Sweeping Program #35	2ND DIST	OSBORNE PKWY [2](RT. 24/GRAFTON SHOP RI
10/15/2024	1.94	Sweeping Program #35	2ND DIST	BERNADETTE DR [2](OSBORNE PKWY/DEAD E
10/15/2024	1.46	Sweeping Program #35	2ND DIST	FOREST VALLEY DR [2](RT 24/BERNADETTE D
11/12/2024	6.00	Sweeping Program #35	2ND DIST	
Sweeping Major/Minor list				
11/13/2024	0.42	Sweeping Program #35	2ND DIST	BEL AIR SOUTH PKWY [2](RT 924/TOLLGATE R
Sweeping Major/Minor list				
11/14/2024	3.50	Sweeping Program #35	2ND DIST	BEL AIR SOUTH PKWY [2](RT 924/TOLLGATE R
11/14/2024	2.82	Sweeping Program #35	2ND DIST	RING FACTORY RD (E) [2](MACPHAIL RD/RT 9
11/15/2024	6.30	Sweeping Program #35	2ND DIST	MACPHAIL RD (E) [2](RT 924/WHEEL RD)
Sweeping Major/Minor list				
11/18/2024	2.38	Sweeping Program #35	2ND DIST	BRIERHILL DR [2](RT 22/MAC PHAIL RD)
Sweeping Major/Minor list				
11/19/2024	7.20	Sweeping Program #35	2ND DIST	SCHUCKS RD [2](RT 22/WHEEL RD)
Sweeping Major/Minor list				
11/20/2024	8.56	Sweeping Program #35	2ND DIST	WHEEL RD [2](RT 543/SHUCKS RD)
Sweeping Major/Minor list				
11/21/2024	3.26	Sweeping Program #35	2ND DIST	WHITAKER MILL RD [2](RT 1/RING FACTORY F
Sweeping Major/Minor list				
11/21/2024	5.25	Sweeping Program #35	2ND DIST	OLD JOPPA RD (N) [2](RT 1/RT 152)
Sweeping Major/Minor list				
02/25/2025	1.94	Sweeping Program #35	2ND DIST	BERNADETTE DR [2](OSBORNE PKWY/DEAD E

Public Works - Bureau of Highways

Work Order Master Report

02/25/2025	3.96	Sweeping Program #35	2ND DIST	JARRETTSVILLE RD [2](RT 1/RT 24)
02/25/2025	2.56	Sweeping Program #35	2ND DIST	OSBORNE PKWY [2](RT. 24/GRAFTON SHOP RI
03/31/2025	1.34	Sweeping Program #35	2ND DIST	RED PUMP RD [2](TOLLGATE/RT 24)
03/31/2025	2.00	Sweeping Program #35	2ND DIST	VALE RD [2](MACROOM CT/CARRS MILL RD)
04/01/2025	2.00	Sweeping Program #35	2ND DIST	VALE RD [2](MACROOM CT/CARRS MILL RD)
04/02/2025	1.35	Sweeping Program #35	2ND DIST	MOORES MILL RD [2](RT 924/RT 22)
04/03/2025	0.80	Sweeping Program #35	2ND DIST	SOUTHAMPTON RD [2](RT 543/MOORES MILL
04/03/2025	7.00	Sweeping Program #35	2ND DIST	THOMAS RUN RD [2](PENNINGTON RD/RT 543
04/04/2025	2.70	Sweeping Program #35	2ND DIST	PROSPECT MILL RD [2](RT 543/RT 22)
04/04/2025	1.28	Sweeping Program #35	2ND DIST	HENDERSON RD [2](RT 543/RT 1)
04/08/2025	2.50	Sweeping Program #35	2ND DIST	BYNUM RD [2](RT 1/RT 24)
04/08/2025	9.98	Sweeping Program #35	2ND DIST	TOLLGATE RD N [2](VALE RD/BUSINESS RT 1)
04/08/2025	2.36	Sweeping Program #35	2ND DIST	PLUMTREE RD [2](RT 924/BRIDGE)
04/10/2025	0.31	Sweeping Program #35	2ND DIST	BEL AIR SOUTH PKWY [2](RT 924/TOLLGATE R
04/10/2025	1.62	Sweeping Program #35	2ND DIST	RING FACTORY RD (W) [2](TOLLGATE RD/WHI
04/10/2025	1.34	Sweeping Program #35	2ND DIST	RING FACTORY RD (E) [2](MACPHAIL RD/RT 92
04/11/2025	3.13	Sweeping Program #35	2ND DIST	MACPHAIL RD (E) [2](RT 924/WHEEL RD)
04/11/2025	0.79	Sweeping Program #35	2ND DIST	BRIERHILL DR [2](RT 22/MAC PHAIL RD)
04/14/2025	3.60	Sweeping Program #35	2ND DIST	SCHUCKS RD [2](RT 22/WHEEL RD)
04/14/2025	4.78	Sweeping Program #35	2ND DIST	WHEEL RD [2](RT 924/EOM (HARFORD GLEN))
04/15/2025	1.90	Sweeping Program #35	2ND DIST	WHITAKER MILL RD [2](RT 1/RING FACTORY F
04/15/2025	2.70	Sweeping Program #35	2ND DIST	OLD JOPPA RD (N) [2](RT 1/RT 152)
04/15/2025	0.40	Sweeping Program #35	2ND DIST	COMMERCE RD [2](JARRETTSVILLE RD/ROUN
04/15/2025	0.53	Sweeping Program #35	2ND DIST	WATER TOWER WAY [2](MD. RT 23/U.S. RT. 1 M
Total:	**199.50**			

Public Works - Bureau of Highways

Work Order Master Report

Work Order Labor, Equipment, and Material Details

ID	Description	Hours	Amount
Labor			
006533	AMBERMAN, TRAVIS	24.00	$1,002.000
003220	BONHAM, DAVID	63.00	$1,575.000
007758	CHANEY, RYAN	32.00	$800.000
007169	CORIANO, OBRYAN	8.00	$199.440
002950	GREENWOOD, ARTHUR	126.00	$6,313.870
007757	HAMRICK, WILLIAM	71.00	$1,916.290
007175	HEINTZ, CHRISTINE	6.00	$205.200
007513	IDDINGS, KOLE	3.00	$105.120
007648	LANDRETH, STEVE (RANDY)	36.00	$1,248.120
007514	TURNER, CLAYTON	18.50	$648.240
	Total:	**387.50**	**$14,013.280**

ID	Description	Hours	Amount	Equip. Emp. ID	Equip. Emplo
Equipment					
223	ELGIN Whirlwind Sweeper 2020/Internatio	7.00	$297.220	007169	CORIANO, C
223	ELGIN Whirlwind Sweeper 2020/Internatio	8.00	$339.680	007757	HAMRICK, V
223	ELGIN Whirlwind Sweeper 2020/Internatio	9.00	$382.140	007175	HEINTZ, CH
223	ELGIN Whirlwind Sweeper 2020/Internatio	20.00	$849.200	007514	TURNER, CI
223	ELGIN Whirlwind Sweeper 2020/Internatio	23.00	$976.580	007648	LANDRETH.
223	ELGIN Whirlwind Sweeper 2020/Internatio	28.00	$1,188.880	002950	GREENWOC
223	ELGIN Whirlwind Sweeper 2020/Internatio	28.00	$1,188.880	003220	BONHAM, D
223	ELGIN Whirlwind Sweeper 2020/Internatio	32.00	$1,358.720	007758	CHANEY, R'
223	ELGIN Whirlwind Sweeper 2020/Internatio	53.00	$2,250.380		
	Total:	**208.00**	**$8,831.680**		

ID	Description	Quantity	Amount
Materials			
000264	LOADS TO YARD	84.00	$0.000
000219	WATER (GALS) FOR PROJECTS/W&S H	402.00	$0.000
	Total:	**486.00**	**$0.000**
	Grand Total:	**1,081.50**	**$22,844.960**

Public Works - Bureau of Highways

Work Order Master Report

Name: **SWEEPING DISTRICT WIDE 2024/2025** Started: 07/01/2024 Completed: 06/25/2025

Programmed Maintenance

Date	Units	Activity	Crew	Road / Subdivision
07/02/2024	0.30	Sweeping Program #35	3RD DIST	TRAPPE RD [3](RT 1/RT 136)
Swept roadway clean of rocks and other road debris.				
07/02/2024	1.80	Sweeping Program #35	3RD DIST	DELP RD [3](RIDGE RD/COOPER RD)
Swept roadway clean of rocks and other road debris.				
07/02/2024	0.40	Sweeping Program #35	3RD DIST	GLEN COVE RD [3](RT 440/BERKLEY RD)
Swept roadway clean at Love and Glen Cove rd. area .				
07/02/2024	0.40	Sweeping Program #35	3RD DIST	RIDGE RD [2](BROADVIEW AVE/HIGHLAND DI
Swept area at Ridge and Slate Ridge road and Ridge and Ridge at Red road.				
07/02/2024	0.65	Sweeping Program #35	3RD DIST	GRANDE VIEW DR [3](RIDGE RD/T TURN ARO
Swept roadway clean of leaves and other road debris.				
07/03/2024	0.40	Sweeping Program #35	3RD DIST	GLEN COVE RD [3](RT 440/BERKLEY RD)
Sweep rocks from roadway.				
07/03/2024	1.80	Sweeping Program #35	3RD DIST	NOBLES MILL RD (S) [3](HARMONY CHURCH I
Sweep from the bridge to the top of the hill.				
07/03/2024	1.70	Sweeping Program #35	3RD DIST	HARMONY CHURCH RD [3](NOBLES MILL RD/I
Sweep rocks and sticks out of the roadway.				
07/03/2024	0.40	Sweeping Program #35	3RD DIST	HOPEWELL RD [3](RT 155/OLD LEVEL RD)
Sweep rocks out of the roadway.				
07/09/2024	1.00	Sweeping Program #35	3RD DIST	DETHS FORD RD (N) [3](TRAPPE CHURCH RD/I
Sweep debris from roadway.				
07/10/2024	1.00	Sweeping Program #35	3RD DIST	PEACH ORCHARD RD [3](RT 136/SUSQUEHANI
Sweep debris from roadway.				
07/10/2024	0.50	Sweeping Program #35	3RD DIST	LINE BRIDGE RD [3](RT 623/DEAD END)
Sweep debris from roadway.				
07/11/2024	1.80	Sweeping Program #35	3RD DIST	LINE BRIDGE RD [3](RT 623/DEAD END)
Sweep debris from roadway.				
07/15/2024	3.10	Sweeping Program #35	3RD DIST	CEDAR CHURCH RD [3](RT 1/POOLE RD)
Sweep debris from roadway.				
07/15/2024	1.60	Sweeping Program #35	3RD DIST	HUGHES ROAD [3](RT. 1/CEDAR CHURCH RD)
Sweep debris from roadway.				
07/15/2024	0.50	Sweeping Program #35	3RD DIST	HUGHES ROAD [3](RT. 1/RT. 440)
Sweep debris from roadway.				
07/16/2024	0.80	Sweeping Program #35	3RD DIST	ARENA RD [3](RT 1/RT 1)
Sweep debris from roadway.				
07/16/2024	1.80	Sweeping Program #35	3RD DIST	THOMAS BRIDGE RD [3](CHERRY HILL RD/DE.
Sweep debris from roadway.				
07/17/2024	1.00	Sweeping Program #35	3RD DIST	THOMAS BRIDGE RD [3](CHERRY HILL RD/DE.
Sweep debris from roadway.				
07/29/2024	0.50	Sweeping Program #35	3RD DIST	CHERRY HILL RD [3](RT 543/RT 24)
Sweep debris from roadway.				
08/02/2024	5.60	Sweeping Program #35	3RD DIST	RIDGE RD [3](OLD PYLESVILLE RD/PA STATE I
Sweep debris from roadway.				
08/02/2024	1.25	Sweeping Program #35	3RD DIST	QUARRY RD [3](OLD PYLESVILLE RD/END T.C
Sweep debris from roadway.				
08/12/2024	1.25	Sweeping Program #35	3RD DIST	CHERRY HILL RD [3](RT 543/RT 24)
Swept roadway to prepare for wedge and level.				

Public Works - Bureau of Highways

Work Order Master Report

08/12/2024	1.85	Sweeping Program #35	3RD DIST	PEACH ORCHARD RD [3](RT 136/SUSQUEHANI
Swept roadway clean of leaves small stones and other road debris.				
08/21/2024	1.85	Sweeping Program #35	3RD DIST	NOBLES MILL RD (S) [3](HARMONY CHURCH I
Swept asphalt roadway from bridge to top of hill.				
08/21/2024	2.25	Sweeping Program #35	3RD DIST	HARMONY CHURCH RD [3](RT 161/GLENVILLI
Swept asphalt roadway.				
08/23/2024	3.25	Sweeping Program #35	3RD DIST	OLD ROCKS RD [3](DAVIS RD/DEAD END)
Swept debris off the road				
08/23/2024	2.35	Sweeping Program #35	3RD DIST	COEN RD [3](RT 24/OLD ROCKS RD)
Swept debris off the road				
08/23/2024	2.25	Sweeping Program #35	3RD DIST	CHESTNUT ST (N) [3](SLATE RIDGE RD/PA STA
Swept debris off the road				
09/04/2024	2.85	Sweeping Program #35	3RD DIST	GLEN COVE RD [3](RT 440/BERKLEY RD)
Swept roadway to prepare for wedge and level.				
09/04/2024	1.00	Sweeping Program #35	3RD DIST	SCARBORO RD [3](SANDY HOOK RD/RT 440)
Swept roadway to prepare for rutmix.				
09/05/2024	3.00	Sweeping Program #35	3RD DIST	SCARBORO RD [3](RT 440/RT 136)
Swept roadway to prepare for laying of asphalt.				
09/05/2024	0.40	Sweeping Program #35	3RD DIST	PADDRICK RD [3](RT 623/END B.T.)
Swept roadway to remove dirt embedded in the roadway.				
09/17/2024	3.50	Sweeping Program #35	3RD DIST	ALLIBONE RD [3](FORGE HILL RD/KALMIA RD
Swept roadway to remove dirt and debris				
09/23/2024	1.40	Sweeping Program #35	3RD DIST	WOOLSEY DR [3](WHITEFIELD RD/FINNEY AV
Swept roadway to remove dirt and debris				
09/23/2024	0.50	Sweeping Program #35	3RD DIST	FINNEY AVE [3](ROLLING GREEN DR/DEAD EN
Swept roadway to remove dirt and debris				
09/23/2024	0.85	Sweeping Program #35	3RD DIST	WHITE THORN WAY [3](WHITEFIELD RD/T TU
Swept roadway to remove dirt and debris				
09/23/2024	0.40	Sweeping Program #35	3RD DIST	MAXWELL CT [3](WHITEFIELD RD/CUL DE SA
Swept roadway to remove dirt and debris				
09/23/2024	4.00	Sweeping Program #35	3RD DIST	WHITEFIELD RD [3](ROLLING GREEN DR/ROL
Swept roadway to remove dirt and debris				
09/24/2024	1.00	Sweeping Program #35	3RD DIST	WALTERS MILL RD [3](END B.T/SANDY HOOK
Swept roadway to remove dirt and debris swept apron				
09/24/2024	0.60	Sweeping Program #35	3RD DIST	MIDDLETON CT (N) [3](ROLLING GREEN DR/C
Swept roadway to remove dirt and debris				
09/24/2024	1.50	Sweeping Program #35	3RD DIST	ROLLING GREEN DR [3](WHITEFIELD RD/COO
Swept roadway to remove dirt and debris				
09/24/2024	0.50	Sweeping Program #35	3RD DIST	FINNEY AVE [3](ROLLING GREEN DR/DEAD EN
Swept roadway to remove dirt and debris				
09/27/2024	0.40	Sweeping Program #35	3RD DIST	BROTHERTON CT [3](YORK DR/CUL DE SAC)
Swept roadway to remove dirt and debris				
09/27/2024	1.85	Sweeping Program #35	3RD DIST	YORK DR [3](DEAD END/T TURN AROUND)
Swept roadway to remove dirt and debris				
09/27/2024	0.40	Sweeping Program #35	3RD DIST	SOMERSET CT [3](PARADISE RD/CUL DE SAC)
Swept roadway to remove dirt and debris				
09/27/2024	0.40	Sweeping Program #35	3RD DIST	PARADISE RD [3](RT 155/DEAD END)
Swept roadway to remove dirt and debris				
10/07/2024	0.80	Sweeping Program #35	3RD DIST	ROBINSON MILL RD [3](RT 136/END T.C.)
Swept roadway to remove dirt and debris				
10/07/2024	1.50	Sweeping Program #35	3RD DIST	KALMIA RD [3](SANDY HOOK RD/RT 1)

Public Works - Bureau of Highways

Work Order Master Report

		Swept roadway to remove dirt and debris		
10/07/2024	0.50	Sweeping Program #35	3RD DIST	WALTERS MILL RD [3](END B.T/SANDY HOOK
		Swept roadway to remove dirt and debris Cleaned the Apron to get ready to overlay		
10/09/2024	1.00	Sweeping Program #35	3RD DIST	CREEK VIEW CT [3](DEER HILL RD/CUL DE SA
		Swept roadway to remove dirt and debris		
10/09/2024	1.10	Sweeping Program #35	3RD DIST	DEER PARK CT [3](WILKINSON RD/CUL DE SA
		Swept roadway to remove dirt and debris		
10/15/2024	0.90	Sweeping Program #35	3RD DIST	GOUCHER WAY [3](WHEATON LA/WHEATON L
		Swept roadway to remove dirt and debris		
10/15/2024	0.40	Sweeping Program #35	3RD DIST	TULANE CT [3](COLLEGE VIEW DR/CUL DE SA
		Swept roadway to remove dirt and debris		
10/15/2024	2.05	Sweeping Program #35	3RD DIST	WESLEYAN DR [3](COLLEGE VIEW DR/GOUCI
		Swept roadway to remove dirt and debris		
10/15/2024	2.00	Sweeping Program #35	3RD DIST	WHEATON CT [3](WHEATON LA/CUL DE SAC)
		Swept roadway to remove dirt and debris		
10/15/2024	2.00	Sweeping Program #35	3RD DIST	COLLEGE VIEW DR [3](RT 136/DEAD END)
		Swept roadway to remove dirt and debris		
10/16/2024	3.10	Sweeping Program #35	3RD DIST	WHITEFIELD RD [3](ROLLING GREEN DR/ROL
		Swept roadway to remove dirt and debris		
10/16/2024	0.40	Sweeping Program #35	3RD DIST	FINNEY AVE [3](ROLLING GREEN DR/DEAD EN
		Swept roadway to remove dirt and debris		
10/25/2024	1.78	Sweeping Program #35	3RD DIST	WEBSTER-LAPIDUM RD [3](RT 155/LAPIDUM F
		Swept roadway to remove dirt and debris		
03/14/2025	2.08	Sweeping Program #35	3RD DIST	PEACH ORCHARD RD [3](RT 136/SUSQUEHANN
		Swept roadway to remove dirt and debris, Nathan Training in the sweeper		
03/18/2025	2.30	Sweeping Program #35	3RD DIST	PEACH ORCHARD RD [3](RT 136/SUSQUEHANN
		Swept roadway to remove dirt and debris		
03/20/2025	2.10	Sweeping Program #35	3RD DIST	WHITEFIELD CT [3](WHITEFIELD RD/CUL DE S
		Swept roadway clean of dirt and debris.		
03/20/2025	0.30	Sweeping Program #35	3RD DIST	MAXWELL CT [3](WHITEFIELD RD/CUL DE SA
		Swept roadway clear of debris and dirt.		
03/20/2025	0.50	Sweeping Program #35	3RD DIST	FINNEY AVE [3](ROLLING GREEN DR/DEAD EN
		Swept roadway clean of stones dirt and other debris.		
03/24/2025	0.31	Sweeping Program #35	3RD DIST	WHITE THORN WAY [3](WHITEFIELD RD/T TU
		Swept roadway to remove road debris.		
03/24/2025	0.62	Sweeping Program #35	3RD DIST	FINNEY AVE [3](ROLLING GREEN DR/DEAD EN
		Swept roadway to remove dirt and other road debris.		
03/24/2025	0.38	Sweeping Program #35	3RD DIST	WOOLSEY DR [3](WHITEFIELD RD/FINNEY AV
		Swept roadway clean of stones sticks and other road debris.		
04/25/2025	0.40	Sweeping Program #35	3RD DIST	WILKINSON RD [3](FOX RD/(3942) END T.C.)
04/28/2025	2.50	Sweeping Program #35	3RD DIST	ALDINO STEPNEY RD [1](END OF B.T./RT 22)
		Sweeped road for debris Getting ready for Wedge and Level		
04/28/2025	1.18	Sweeping Program #35	3RD DIST	RUFFS MILL RD [3](RT 1/THOMAS RUN RD)
		Sweeped road for debris Getting ready for Wedge and Level		
05/21/2025	1.00	Sweeping Program #35	3RD DIST	PYLE RD [3](GRIER NURSERY RD/CHESTNUT I
		Sweeping loose stone for service request 51323		
05/29/2025	0.77	Sweeping Program #35	3RD DIST	ARCHER RD [3](RT 136/RT 624)
		Swept roadway clean of dirt stones and other road debris.		
05/29/2025	1.45	Sweeping Program #35	3RD DIST	CONSTITUTION RD [3](PA STATE LINE/RT 24)
		Swept roadway clean of dirt and other road debris.		
06/05/2025	0.77	Sweeping Program #35	3RD DIST	ARCHER RD [3](RT 136/RT 624)

Public Works - Bureau of Highways

Work Order Master Report

		Swept roadway clean of dirt and other road debris.		
06/11/2025	1.00	Sweeping Program #35	3RD DIST	PALMER VIEW DR [3](PALMER VIEW DR/DEER
		Swept roadway clean of dirt and other road debris.		
06/11/2025	2.10	Sweeping Program #35	3RD DIST	BRINEGAR RD [3](RT 543/BOYD RD)
		Swept roadway clean of dirt and other road debris.		
06/11/2025	1.50	Sweeping Program #35	3RD DIST	TOBACCO RUN DR [3](TOBACCO RUN RD/CUL
		Swept roadway clean of dirt and other road debris.		
06/11/2025	0.70	Sweeping Program #35	3RD DIST	DEER VALLEY WAY [3](TOBACCO RUN DR/CUI
		Swept roadway clean of dirt and other road debris.		
06/16/2025	4.00	Sweeping Program #35	3RD DIST	SLATE RIDGE RD [3](MAIN ST/RIDGE RD)
		Swept roadway clean of dirt and other road debris.		
06/16/2025	1.40	Sweeping Program #35	3RD DIST	GRANDE VIEW DR [3](RIDGE RD/T TURN ARO
		Swept roadway clean of dirt and other road debris.		
06/17/2025	0.02	Sweeping Program #35	3RD DIST	GRANDE VIEW DR [3](RIDGE RD/T TURN ARO
		Swept roadway clean of dirt and other road debris.		
06/17/2025	0.01	Sweeping Program #35	3RD DIST	ROLLING GREEN DR [3](WHITEFIELD RD/COO
		Swept roadway clean of dirt and other road debris.		
06/17/2025	0.20	Sweeping Program #35	3RD DIST	MAXWELL CT [3](WHITEFIELD RD/CUL DE SA
		Swept roadway clean of dirt and other road debris.		
06/17/2025	0.90	Sweeping Program #35	3RD DIST	WHITE THORN WAY [3](WHITEFIELD RD/T TU
		Swept roadway clean of leaves and other road debris.		
06/17/2025	0.40	Sweeping Program #35	3RD DIST	FINNEY AVE [3](ROLLING GREEN DR/DEAD EI
		Swept roadway clean of silt and dirt.		
06/17/2025	1.20	Sweeping Program #35	3RD DIST	WHITEFIELD RD [3](ROLLING GREEN DR/ROL
		Swept roadway clean of dirt sticks and other road debris.		
06/17/2025	0.80	Sweeping Program #35	3RD DIST	WOOLSEY DR [3](WHITEFIELD RD/FINNEY AV
		Swept roadway clean of dirt.		
06/17/2025	0.20	Sweeping Program #35	3RD DIST	WHITEFIELD CT [3](WHITEFIELD RD/CUL DE S
		Swept roadway clean of leaves and other road debris.		
06/25/2025	5.30	Sweeping Program #35	3RD DIST	PEACH ORCHARD RD [3](RT 136/SUSQUEHANI
		Swept roadway clean of debris and dirt		
Total:	**121.82**			

Public Works - Bureau of Highways

Work Order Master Report

Work Order Labor, Equipment, and Material Details

ID	Description	Hours	Amount
Labor			
000652	BARBEN, STEVEN	18.00	$985.140
005445	HISEY, JOSH	10.00	$448.200
007862	SCHISLER, NATHAN	16.00	$560.640
006816	TORBERT, CHRISTOPHER	186.00	$6,842.950
006100	WALDROP, TIM	56.00	$2,187.360
	Total:	**286.00**	**$11,024.290**

ID	Description	Hours	Amount	Equip. Emp. ID	Equip. Emplo
Equipment					
374 C	2015 JEEP PATRIOT 4X4 6 SPEED/JEEP/I	2.00	$20.560	006816	TORBERT, C
278	2022 FREIGHT LINER/FREIGHT LINER/	1.00	$42.460		
278	2022 FREIGHT LINER/FREIGHT LINER/	8.00	$339.680	005445	HISEY, JOSI
278	2022 FREIGHT LINER/FREIGHT LINER/	16.00	$679.360	000652	BARBEN, ST
278	2022 FREIGHT LINER/FREIGHT LINER/	55.00	$2,335.300	006100	WALDROP, '
278	2022 FREIGHT LINER/FREIGHT LINER/	159.60	$6,776.620	006816	TORBERT, C
178	DUMP-16/INTERNATIONAL/7400-SINGI	4.00	$57.000	006816	TORBERT, C
	Total:	**245.60**	**$10,250.980**		

ID	Description	Quantity	Amount
Materials			
000264	LOADS TO YARD	85.00	$0.000
	Total:	**85.00**	$0.000
	Grand Total:	**616.60**	$21,275.270

Public Works - Bureau of Highways

Work Order Master Report

Name: **SWEEPING PROGRAM 7/24-6/25** Started: 07/01/2024 Completed: 06/30/2025

Programmed Maintenance

Date	Units	Activity	Crew	Road / Subdivision
07/02/2024	4.00	Sweeping Program #35	4TH DIST	
Sweeping washed out spots from storm				
07/22/2024	1.60	Sweeping Program #35	4TH DIST	TROUT FARM RD [4](LADY ANNE CT/CUL DE S
07/23/2024	0.16	Sweeping Program #35	4TH DIST	MELDE CT [4](TROUT FARM RD/CUL DE SAC)
07/23/2024	0.08	Sweeping Program #35	4TH DIST	CLAY CT [4](TROUT FARM RD/CUL DE SAC)
07/23/2024	0.16	Sweeping Program #35	4TH DIST	LONGWOOD CT [4](TROUT FARM RD/CUL DE S
07/23/2024	0.02	Sweeping Program #35	4TH DIST	ZIEGLERS CT [4](TROUT FARM RD/CUL DE SA
07/23/2024	0.08	Sweeping Program #35	4TH DIST	ANDOVER RD [4](TROUT FARM RD/CUL DE SA
07/24/2024	4.00	Sweeping Program #35	4TH DIST	
Debris washed in road dist.wide.				
07/26/2024	0.70	Sweeping Program #35	4TH DIST	CROSS COUNTRY CT [4](RT 165/CUL DE SAC)
07/26/2024	0.78	Sweeping Program #35	4TH DIST	FARMVIEW DR [4](RT 165/CUL DE SAC)
07/26/2024	0.22	Sweeping Program #35	4TH DIST	VICTORIAN VIEW CT [4](FARMVIEW DR/CUL I
07/26/2024	0.40	Sweeping Program #35	4TH DIST	WINDSWEPT CT [4](FARMVIEW DR/CUL DE SA
07/26/2024	0.86	Sweeping Program #35	4TH DIST	PARKWOOD DR [4](RT 165/T TURN)
07/26/2024	1.20	Sweeping Program #35	4TH DIST	HUNT FIELD WAY [4](RT 165/CUL DE SAC)
07/26/2024	0.08	Sweeping Program #35	4TH DIST	ANDOVER RD [4](TROUT FARM RD/CUL DE SA
07/26/2024	0.16	Sweeping Program #35	4TH DIST	LOWE RD [4](RT 165/ANDOVER RD)
07/29/2024	2.78	Sweeping Program #35	4TH DIST	ENGLE RD [4](CHARLES ST/RT 152)
07/29/2024	0.76	Sweeping Program #35	4TH DIST	ENGLE RD [4](RT 152/T TURN)
07/29/2024	0.42	Sweeping Program #35	4TH DIST	JO ANN LA [4](ENGLE RD/T TURN)
07/29/2024	0.46	Sweeping Program #35	4TH DIST	HAZELWOOD DR [4](CUL DE SAC/CUL DE SAC
07/29/2024	0.36	Sweeping Program #35	4TH DIST	PRITCHETT LA [4](ENGLE RD/CUL DE SAC)
08/01/2024	0.42	Sweeping Program #35	4TH DIST	BUCKTHORN DR [4](DALEWOOD DR/CUL DE S
08/01/2024	0.10	Sweeping Program #35	4TH DIST	BUCKTHORN CT [4](BUCKTHORN DR/CUL DE S
08/01/2024	0.52	Sweeping Program #35	4TH DIST	EATON DR [4](NORTH BEND RD/CUL DE SAC)
08/16/2024	0.50	Sweeping Program #35	4TH DIST	POCOCK RD [4](RT 152/BALTO CO LINE)
08/16/2024	3.00	Sweeping Program #35	4TH DIST	CAREA RD [4](PA LINE/TELEGRAPH RD)
08/27/2024	650.00	Sweeping Program #35	4TH DIST	ST PAULS CHURCH RD [4](W HEAPS RD/TELEC
sweeping				
08/30/2024	1.00	Sweeping Program #35	4TH DIST	ST PAULS CHURCH RD [4](W HEAPS RD/TELEC
sweeping				
09/12/2024	1.00	Sweeping Program #35	4TH DIST	NEAL RD [4](ST. PAUL'S CHURCH RD/ONION R
09/13/2024	0.80	Sweeping Program #35	4TH DIST	NEAL RD [4](ST. PAUL'S CHURCH RD/ONION R
09/20/2024	0.30	Sweeping Program #35	4TH DIST	BELLE MEADE RD [4](CARRS MILL RD/HYDEN
09/20/2024	0.20	Sweeping Program #35	4TH DIST	LAMAR CT [4](BELLE MEADE RD/CUL DE SAC
09/20/2024	0.40	Sweeping Program #35	4TH DIST	HYDEN CT [4](CARLO COURT/CUL DE SAC)
09/20/2024	0.32	Sweeping Program #35	4TH DIST	CARLO CT [4](CUL DE SAC/T TURN AROUND)
09/20/2024	0.76	Sweeping Program #35	4TH DIST	MILL DALE CT [4](CARRS MILL RD/CUL DE SA
09/20/2024	0.64	Sweeping Program #35	4TH DIST	MURGATROYD RD [4](CARRS MILL RD/T TURN
09/20/2024	0.60	Sweeping Program #35	4TH DIST	CARLO RD [4](MURGATROYD RD/T TURN ARO
09/24/2024	1.20	Sweeping Program #35	4TH DIST	TROYER RD [4](HARFORD CREAMERY RD/RT 1
sweeping debris off road				

Public Works - Bureau of Highways

Work Order Master Report

09/24/2024	1.50	Sweeping Program #35	4TH DIST	BRADENBAUGH RD [4](RT 23/MADONNA RD)
sweeping debris off road				
09/24/2024	1.50	Sweeping Program #35	4TH DIST	HESS RD [4](RT 152/BALTO CO LINE)
sweeping nails from roadway (caller said there were nails in road)				
09/25/2024	1.00	Sweeping Program #35	4TH DIST	
sweeping odds and ends on grafton shop,carrs mill ,boggs rd				
10/25/2024	1.50	Sweeping Program #35	4TH DIST	CAREA RD [4](PA LINE/TELEGRAPH RD)
11/05/2024	0.52	Sweeping Program #35	4TH DIST	STONE HAVEN DR [4](RT 24/T TURN AROUND)
S/R#50301				
11/05/2024	0.16	Sweeping Program #35	4TH DIST	AZURE CT [4](STONE HAVEN DR/CUL DE SAC)
11/18/2024	0.52	Sweeping Program #35	4TH DIST	EATON DR [4](NORTH BEND RD/CUL DE SAC)
S/R				
11/18/2024	0.20	Sweeping Program #35	4TH DIST	BUCKTHORN DR [4](DALEWOOD DR/CUL DE S
11/26/2024	1.46	Sweeping Program #35	4TH DIST	CLARET DR [4](RT 152/T TURN AROUND)
11/27/2024	0.74	Sweeping Program #35	4TH DIST	COOL WOODS CT [4](RT 146/CUL DE SAC)
11/27/2024	0.40	Sweeping Program #35	4TH DIST	CHATAU CT [2](OLD FALLSTON RD/CUL DE SA
11/27/2024	0.70	Sweeping Program #35	4TH DIST	BURGUNDY DR [4](CLARET DR/CABERNET CT
11/27/2024	0.10	Sweeping Program #35	4TH DIST	CABERNET CT (N) [4](CABERNET CT (S)/CUL D
12/17/2024	7.00	Sweeping Program #35	4TH DIST	
Route # 76				
12/18/2024	1.00	Sweeping Program #35	4TH DIST	WILDWOOD DR [4](CARRS MILL RD/DEAD EN
12/18/2024	0.16	Sweeping Program #35	4TH DIST	WILD ORCHID DR [4](CUL DE SAC/CUL DE SAC
12/18/2024	0.20	Sweeping Program #35	4TH DIST	MILL CREEK ROAD (SOUTH) [4](WILDWOOD I
12/18/2024	0.18	Sweeping Program #35	4TH DIST	GRIST CT [4](WILDWOOD RD/CUL DE SAC)
12/18/2024	0.50	Sweeping Program #35	4TH DIST	MILL CREEK RD (NORTH) [4](WILDWOOD DR/
12/18/2024	0.10	Sweeping Program #35	4TH DIST	GROVETON CT [4](MILL CREEK RD(N)/CUL DE
12/18/2024	0.26	Sweeping Program #35	4TH DIST	HILLSBORO CT [4](WILDWOOD DR/CUL DE SA
12/18/2024	0.22	Sweeping Program #35	4TH DIST	CARRS MILL CT [4](CARRS MILL RD/CUL DE S
12/18/2024	0.76	Sweeping Program #35	4TH DIST	MILL DALE CT [4](CARRS MILL RD/CUL DE SA
12/18/2024	0.50	Sweeping Program #35	4TH DIST	GRANDVIEW CT [4](ANGLESIDE RD/CUL DE S.
12/18/2024	0.20	Sweeping Program #35	4TH DIST	SPRINGVIEW CT [4](GRANDVIEW CT/CUL DE S
12/30/2024	0.75	Sweeping Program #35	4TH DIST	CAREA RD [4](PA LINE/TELEGRAPH RD)
S/R#50548				
01/30/2025	0.75	Sweeping Program #35	4TH DIST	CAREA RD [4](PA LINE/TELEGRAPH RD)
02/10/2025	1.00	Sweeping Program #35	4TH DIST	LARCHMONT DR [4](BRENTWOOD DR/T TURN
SWEEPING SALT. SERVICE REQUEST				
02/27/2025	1.00	Sweeping Program #35	4TH DIST	AMOS RD [4](HITCHCOCK RD/END B.T.)
SWEEPING UP POTHOLE DEBRIS				
02/27/2025	1.00	Sweeping Program #35	4TH DIST	CARRS MILL CT [4](CARRS MILL RD/CUL DE S
SWEEPING UP POTHOLE DEBRIS				
02/27/2025	1.00	Sweeping Program #35	4TH DIST	HILLCROFT DR [4](PHILLIPS MILL RD/T TURN
SWEEPING UP POTHOLE DEBRIS				
03/05/2025	0.16	Sweeping Program #35	4TH DIST	AZURE CT [4](STONE HAVEN DR/CUL DE SAC)
03/05/2025	0.52	Sweeping Program #35	4TH DIST	STONE HAVEN DR [4](RT 24/T TURN AROUND)
03/05/2025	2.00	Sweeping Program #35	4TH DIST	KREITLER RD [4](MORSE RD/T TURN AROUNI
03/05/2025	1.64	Sweeping Program #35	4TH DIST	KREITLER VALLEY RD [4](KREITLER RD/DEAI
03/06/2025	2.00	Sweeping Program #35	4TH DIST	KREITLER RD [4](MORSE RD/T TURN AROUNI
03/06/2025	1.64	Sweeping Program #35	4TH DIST	KREITLER VALLEY RD [4](KREITLER RD/DEAI
03/06/2025	1.64	Sweeping Program #35	4TH DIST	BAYWOOD DR [4](KREITLER VALLEY RD/KREI

Public Works - Bureau of Highways

Work Order Master Report

03/06/2025	0.18	Sweeping Program #35	4TH DIST	BRANCH CT (E) [4](KREITLER RD/CUL DE SAC
03/07/2025	1.64	Sweeping Program #35	4TH DIST	BONAIRE RD [4](HIGH POINT RD/T TURN ARO
03/07/2025	0.12	Sweeping Program #35	4TH DIST	FIFE CT [4](BONAIRE RD/CUL DE SAC)
03/07/2025	0.52	Sweeping Program #35	4TH DIST	TEAFORD RD [4](HIGH POINT RD/BONAIRE RI
03/07/2025	0.20	Sweeping Program #35	4TH DIST	BYTON CT [4](TEAFORD RD/CUL DE SAC)
03/10/2025	1.60	Sweeping Program #35	4TH DIST	TROUT FARM RD [4](LADY ANNE CT/CUL DE S
03/10/2025	0.16	Sweeping Program #35	4TH DIST	ZIEGLERS CT [4](TROUT FARM RD/CUL DE SA
03/10/2025	0.10	Sweeping Program #35	4TH DIST	CLAY CT [4](TROUT FARM RD/CUL DE SAC)
03/10/2025	0.16	Sweeping Program #35	4TH DIST	MELDE CT [4](TROUT FARM RD/CUL DE SAC)
03/10/2025	0.16	Sweeping Program #35	4TH DIST	LONGWOOD CT [4](TROUT FARM RD/CUL DE S
03/11/2025	0.08	Sweeping Program #35	4TH DIST	SUFFOLK CT [4](SUFFOLK LA./CUL DE SAC)
03/11/2025	0.09	Sweeping Program #35	4TH DIST	CANTERBURY LA [4](HESS RD/CUL DE SAC)
03/11/2025	0.28	Sweeping Program #35	4TH DIST	ASCOT LA [4](CANTERBURY LA/CANTERBURY
03/11/2025	0.50	Sweeping Program #35	4TH DIST	WELLINGTON WAY [4](FOREST GLEN DR/CUL I
03/11/2025	50.00	Sweeping Program #35	4TH DIST	BRYSON CT [4](GLEN ELYN WAY/CUL DE SAC)
03/11/2025	0.08	Sweeping Program #35	4TH DIST	BENNINGTON CT [4](FOREST GLEN DR/CUL DI
03/11/2025	0.33	Sweeping Program #35	4TH DIST	FERNWOOD CT [4](GLEN ELYN WAY/CUL DE S
03/11/2025	0.50	Sweeping Program #35	4TH DIST	BRANDON HUNT LA [4](PEMBERTON RIDGE/CI
03/11/2025	0.25	Sweeping Program #35	4TH DIST	STEVENS CT [4](BRANDON HUNT LA/CUL DE S
03/18/2025	1.25	Sweeping Program #35	4TH DIST	CLOVERDALE DR [4](RT 152/LARCHMONT DR)
03/18/2025	0.25	Sweeping Program #35	4TH DIST	THORNWOOD CT [4](CLOVERDALE DR/CUL D
03/18/2025	1.50	Sweeping Program #35	4TH DIST	LARCHMONT DR [4](BRENTWOOD DR/T TURN
03/18/2025	1.00	Sweeping Program #35	4TH DIST	ANDERSON LA [4](JARRETTSVILLE RD/END CC
03/18/2025	1.00	Sweeping Program #35	4TH DIST	DULANEY DR [4](JARRETTSVILLE RD/ANDERS
03/20/2025	0.34	Sweeping Program #35	4TH DIST	STILLWATER CT [4](PARKWOOD DR/CUL DE S/
03/20/2025	0.44	Sweeping Program #35	4TH DIST	TREELINE DR [4](PARKWOOD DR/T TURN ARC
03/20/2025	0.14	Sweeping Program #35	4TH DIST	MORAN CT [4](PARKWOOD DR/CUL DE SAC)
03/20/2025	0.18	Sweeping Program #35	4TH DIST	LOWE RD [4](RT 165/ANDOVER RD)
03/20/2025	0.80	Sweeping Program #35	4TH DIST	PARKWOOD DR [4](RT 165/T TURN)
03/20/2025	1.14	Sweeping Program #35	4TH DIST	ANDOVER RD [4](TROUT FARM RD/CUL DE SA
03/24/2025	1.46	Sweeping Program #35	4TH DIST	CLARET DR [4](RT 152/T TURN AROUND)
03/28/2025	1.26	Sweeping Program #35	4TH DIST	DULANEY DR [4](JARRETTSVILLE RD/ANDERS
03/31/2025	0.10	Sweeping Program #35	4TH DIST	BURGUNDY DR [4](CLARET DR/CABERNET CT
03/31/2025	0.30	Sweeping Program #35	4TH DIST	CABERNET CT (N) [4](CABERNET CT (S)/CUL D
03/31/2025	0.20	Sweeping Program #35	4TH DIST	PORT LANE [4](CLARET DR/T TURN)
03/31/2025	0.44	Sweeping Program #35	4TH DIST	BORDEUX CT [4](CUL-DE-SAC/CUL DE SAC)
03/31/2025	0.40	Sweeping Program #35	4TH DIST	CHATEAU CT [4](CLARET DR/CUL DE SAC)
03/31/2025	0.70	Sweeping Program #35	4TH DIST	BURGUNDY DR [4](CLARET DR/CUL DE SAC)
04/01/2025	2.00	Sweeping Program #35	4TH DIST	WILDWOOD DR [4](CARRS MILL RD/DEAD EN
sweeping				
04/01/2025	1.20	Sweeping Program #35	4TH DIST	WILD ORCHID DR [4](CUL DE SAC/CUL DE SA(
sweeping				
04/01/2025	1.20	Sweeping Program #35	4TH DIST	HILLSBORO CT [4](WILDWOOD DR/CUL DE SA
sweeping				
04/01/2025	0.85	Sweeping Program #35	4TH DIST	GRIST CT [4](WILDWOOD RD/CUL DE SAC)
sweeping				
04/01/2025	1.00	Sweeping Program #35	4TH DIST	MILL CREEK RD (NORTH) [4](WILDWOOD DR/
sweeping				

Public Works - Bureau of Highways

Work Order Master Report

04/01/2025	1.00	Sweeping Program #35	4TH DIST	GROVETON CT [4](MILL CREEK RD(N)/CUL DE
sweeping				
04/03/2025	0.76	Sweeping Program #35	4TH DIST	WELLINGTON WAY [4](FOREST GLEN DR/CUL I
04/03/2025	0.14	Sweeping Program #35	4TH DIST	BRYSON CT [4](GLEN ELYN WAY/CUL DE SAC)
04/03/2025	0.14	Sweeping Program #35	4TH DIST	NEW FANE CT [4](GLEN ELYN DR/CUL DE SAC
04/03/2025	0.10	Sweeping Program #35	4TH DIST	SQUIRE CT [4](FOREST GLEN DR/CUL DE SAC)
04/03/2025	0.22	Sweeping Program #35	4TH DIST	BENNINGTON CT [4](FOREST GLEN DR/CUL DE
04/03/2025	0.20	Sweeping Program #35	4TH DIST	RAINTREE CT [4](WELLINGTON WAY/CUL DE
04/03/2025	1.56	Sweeping Program #35	4TH DIST	GLEN ELYN WAY [4](WELLINGTON WAY/DEAI
04/03/2025	0.20	Sweeping Program #35	4TH DIST	CLEARFIELD CT [4](GLEN ELYN WAY/CUL DE
04/03/2025	0.18	Sweeping Program #35	4TH DIST	FERNWOOD CT [4](GLEN ELYN WAY/CUL DE S
04/03/2025	0.34	Sweeping Program #35	4TH DIST	BRANDON HUNT LA [4](PEMBERTON RIDGE/CI
04/03/2025	0.24	Sweeping Program #35	4TH DIST	STEVENS CT [4](BRANDON HUNT LA/CUL DE :
04/04/2025	0.48	Sweeping Program #35	4TH DIST	PEMBERTON RIDGE [4](MOORES RD/CUL DE S
04/04/2025	0.36	Sweeping Program #35	4TH DIST	MORNINGSIDE CT [4](PEMBERTON RIDGE/CU.
04/04/2025	0.20	Sweeping Program #35	4TH DIST	BLYTHE CT [4](MOORES RD/CUL DE SAC)
04/04/2025	0.16	Sweeping Program #35	4TH DIST	SHADY GROVE CT [4](MOORES RD/CUL DE SA
04/04/2025	0.50	Sweeping Program #35	4TH DIST	MERCER DR [4](MOORES RD/CUL DE SAC)
04/04/2025	0.76	Sweeping Program #35	4TH DIST	PLACID DR [4](SHADY GROVE DR/CUL DE SAC
04/04/2025	0.34	Sweeping Program #35	4TH DIST	RAYNHAM CT [4](PLACID DR/CUL DE SAC)
04/04/2025	0.98	Sweeping Program #35	4TH DIST	GREENE LA [4](MOORES RD/DEAD END)
04/04/2025	0.12	Sweeping Program #35	4TH DIST	SUFFOLK CT [4](SUFFOLK LA./CUL DE SAC)
04/04/2025	0.12	Sweeping Program #35	4TH DIST	THAMES CT [4](SUFFOLK LA/CUL DE SAC)
04/04/2025	0.90	Sweeping Program #35	4TH DIST	SUFFOLK LA [4](HESS RD/DEAD END)
04/07/2025	1.10	Sweeping Program #35	4TH DIST	CANTERBURY LA [4](HESS RD/CUL DE SAC)
sweeping				
04/07/2025	0.48	Sweeping Program #35	4TH DIST	AINTREE LA [4](SUFFOLK LA/CANTERBURY L
sweeping				
04/07/2025	0.64	Sweeping Program #35	4TH DIST	ASCOT LA [4](CANTERBURY LA/CANTERBURY
sweeping				
04/07/2025	2.78	Sweeping Program #35	4TH DIST	ENGLE RD [4](RT 152/T TURN)
sweeping				
04/07/2025	0.42	Sweeping Program #35	4TH DIST	JO ANN LA [4](ENGLE RD/T TURN)
sweeping				
04/07/2025	0.46	Sweeping Program #35	4TH DIST	HAZELWOOD DR [4](CUL DE SAC/CUL DE SAC
sweeping				
04/30/2025	0.30	Sweeping Program #35	4TH DIST	CITATION RD [4](RT 23/CHALLEDON RD)
04/30/2025	0.20	Sweeping Program #35	4TH DIST	BELMONT DR [4](CITATION RD/T TURN AROUI
04/30/2025	0.10	Sweeping Program #35	4TH DIST	CHALLEDON CT [4](CHALLEDON RD/CUL DE S
04/30/2025	0.20	Sweeping Program #35	4TH DIST	AUTUMN DR [4](COX RD/NODLEIGH TERR)
04/30/2025	0.10	Sweeping Program #35	4TH DIST	TREBOR CT [4](NODLEIGH TERR/CUL DE SAC)
04/30/2025	0.10	Sweeping Program #35	4TH DIST	BRONSON CT [4](MANOR VIEW CT/CUL DE SA(
04/30/2025	0.50	Sweeping Program #35	4TH DIST	MANOR VIEW CT [4](NODLEIGH TERR/CUL DE
04/30/2025	0.50	Sweeping Program #35	4TH DIST	CROFTLEIGH CT [4](NODLEIGH TERR/CUL DE
04/30/2025	0.20	Sweeping Program #35	4TH DIST	NODLEIGH TERR [4](MANOR VIEW CT/CUL DE
05/01/2025	0.14	Sweeping Program #35	4TH DIST	COX TERR [4](COX RD/CUL DE SAC)
05/01/2025	0.40	Sweeping Program #35	4TH DIST	OVERLOOK DR [4](COX RD/T TURN)
05/01/2025	0.14	Sweeping Program #35	4TH DIST	KNOLL CT [4](CROWN HILL RD/CUL DE SAC)

Public Works - Bureau of Highways

Work Order Master Report

05/01/2025	0.60	Sweeping Program #35	4TH DIST	CROWN HILL RD [4](OVERLOOK DR/CUL DE S
05/02/2025	0.52	Sweeping Program #35	4TH DIST	JOSHUA CT [4](MT HOREB RD/CUL DE SAC)
05/02/2025	0.28	Sweeping Program #35	4TH DIST	GANFORD CT [4](YOUNGSTON RD/CUL DE SA
05/02/2025	0.14	Sweeping Program #35	4TH DIST	GILFORD CT [4](YOUNGSTON RD/CUL DE SAC
05/02/2025	1.25	Sweeping Program #35	4TH DIST	YOUNGSTON RD [4](RT 165/CUL DE SAC)
05/13/2025	0.28	Sweeping Program #35	4TH DIST	DALE CT [4](GREEN RD/CUL DE SAC)
05/13/2025	1.03	Sweeping Program #35	4TH DIST	FALLS GROVE WAY [4](OAKMONT RD/BLAKE
05/13/2025	0.90	Sweeping Program #35	4TH DIST	COPPERWOOD WAY [4](FALLS GROVE WAY/BL
05/13/2025	0.12	Sweeping Program #35	4TH DIST	LAMONT CT [4](COPPERWOOD WAY/CUL DE S
05/13/2025	0.26	Sweeping Program #35	4TH DIST	CHATSWORTH CT [4](COPPERWOOD WAY/CUL
05/13/2025	0.10	Sweeping Program #35	4TH DIST	BLAKEWOOD CT [4](FALLSGROVE WAY/CUL D
05/13/2025	0.12	Sweeping Program #35	4TH DIST	NORWOOD CT (N) [4](CUL DE SAC/FALLSGRO
05/14/2025	0.50	Sweeping Program #35	4TH DIST	CARRS MILL RD [4](WILDWOOD DR/RT 152)
Sweeping S/R				
05/14/2025	0.38	Sweeping Program #35	4TH DIST	FOX MEADOW CT [4](RT 152/CUL DE SAC)
05/14/2025	1.50	Sweeping Program #35	4TH DIST	FURNACE RD [4](RT 165/RT 152)
Sweeping for pre tar/chip				
05/15/2025	1.50	Sweeping Program #35	4TH DIST	FURNACE RD [4](RT 165/RT 152)
Sweeping for pre tar/chip				
05/19/2025	2.00	Sweeping Program #35	4TH DIST	CAREA RD [4](PA LINE/TELEGRAPH RD)
05/20/2025	1.00	Sweeping Program #35	4TH DIST	CAREA RD [4](PA LINE/TELEGRAPH RD)
05/29/2025	1.00	Sweeping Program #35	4TH DIST	FURNACE RD [4](RT 165/RT 152)
preparing rd for tar and chip				
06/13/2025	1.25	Sweeping Program #35	4TH DIST	TROYER RD [4](HARFORD CREAMERY RD/RT
sweeping debris from road edge				
06/13/2025	1.25	Sweeping Program #35	4TH DIST	NORTHCLIFF DR [4](RT 146/CUL DE SAC)
sweeping debris from road edge/entire neighborhood				
06/18/2025	0.66	Sweeping Program #35	4TH DIST	ROUND HILL RD [4](PLEASANTVILLE RD/T TU
06/18/2025	0.56	Sweeping Program #35	4TH DIST	HAMPSHIRE DR [4](CUL-DE-SAC/CUL DE SAC)
06/18/2025	0.56	Sweeping Program #35	4TH DIST	GIVENSWOOD DR [4](ROUND HILL RD/T TURN
06/18/2025	0.32	Sweeping Program #35	4TH DIST	HAVERBROOK DR [4](ROUND HILL RD/HAMPS
06/30/2025	1.00	Sweeping Program #35	4TH DIST	
sweeping sand up from hyd leak on loader from weekend				
Total:	**831.46**			

Public Works - Bureau of Highways

Work Order Master Report

Work Order Labor, Equipment, and Material Details

ID	Description	Hours	Amount
Labor			
005860	BLANKENSHIP, DANA	2.00	$81.480
004313	BRANDT, BRIAN	14.00	$663.210
000496	BUECHE, ROBERT	22.00	$1,177.880
000576	HARPLE, JEFFREY	24.00	$1,335.120
003904	JENKINS, WILLIAM MARK	14.00	$658.840
003341	MACOMBER, JOHN	36.00	$1,775.520
004442	MELEFSKY, PAUL	12.00	$561.360
004286	NICEWANDER, ROBERT	8.00	$383.140
007760	RICHARDSON, MARC	56.00	$1,912.940
002738	TYSON, DENNIS	23.00	$1,161.730
002701	WAUGH, ROY	209.50	$10,665.830
007759	ZANKOWITZ, MADISON	30.00	$1,051.200
	Total:	**450.50**	**$21,428.250**

ID	Description	Hours	Amount	Equip. Emp. ID	Equip. Emplo
Equipment					
213	2019 WHIRLWIND SWEEPER/WHIRLWI	4.00	$169.840	004442	MELEFSKY,
213	2019 WHIRLWIND SWEEPER/WHIRLWI	8.00	$339.680	000496	BUECHE, RC
213	2019 WHIRLWIND SWEEPER/WHIRLWI	8.00	$339.680	004286	NICEWANDI
213	2019 WHIRLWIND SWEEPER/WHIRLWI	8.00	$339.680	007760	RICHARDSC
213	2019 WHIRLWIND SWEEPER/WHIRLWI	14.00	$594.440	003904	JENKINS, W
213	2019 WHIRLWIND SWEEPER/WHIRLWI	15.00	$636.880	000576	HARPLE, JE
213	2019 WHIRLWIND SWEEPER/WHIRLWI	16.00	$679.360	002738	TYSON, DEI
213	2019 WHIRLWIND SWEEPER/WHIRLWI	19.00	$806.740	003341	MACOMBEF
213	2019 WHIRLWIND SWEEPER/WHIRLWI	30.00	$1,273.800	007759	ZANKOWIT:
213	2019 WHIRLWIND SWEEPER/WHIRLWI	39.00	$1,655.940		
213	2019 WHIRLWIND SWEEPER/WHIRLWI	184.00	$7,812.650	002701	WAUGH, RO
058	PICKUP-3/4 TON-17/FORD/F350 4X4 EX	2.00	$24.820	007760	RICHARDSC
344	SWEEPER-2017/ELGIN SWEEPER FREI(	2.00	$84.920	005860	BLANKENSI
	Total:	**349.00**	**$14,758.430**		

ID	Description	Quantity	Amount
Materials			
H00681	BITUMINOUS CONCRETE/COLD PATCI	5.00	$70.950
000264	LOADS TO YARD	131.00	$0.000

Public Works - Bureau of Highways

Work Order Master Report

Total:	**136.00**	$70.950
Grand Total:	**935.50**	$36,257.630

Pesticide Application July - August 2022

Name of Applicator	Date/time	Customer/Address of Treatment	Site of application & target pest	Size of area treated	Common name of pesticide used	EPA reg. # of pesticide used	Rate and/or cocentration of pesticide	total amount of pesticide used	Type of application equiplent	wind speed direction	Additional comment
Delano	7/12/22	Equestrian center	grass hard surfaces	1k sq ft	Farmworks 41%Glyphosate	84009-12	10%	0.5 gal	bps	still	spot spray
Delano	7/18/22	Otter point landing	grass and weeds hard surfaces	10k sq ft	Farmworks 41% Glyphosate	84009-12	10%		bps	3.2 se	spot spray
Delano	7/22/22	SHF	Grass/mosquito preventative	4k sq ft	Cutter backyard bug control	9688-262-121	applicator mixed	20oz	applicator bottle	5ssw	
Delano	8/1/22	Norrisville complex	weeds batting cages	800 sq ft	Farmworks 41% Glyphosate	84009-12	10%	1/2 gal	bps	1.8 ssw	
Delano	8/1/22	Cedar lane complex	weeds/ irrigation pump	1600 sq ft	Farmworks 41% Glyphosate	84009-12	10%	2 gal	bps	1.3 sw	Heavy vegetation
Delano	8/1/22	Churchville Glenville	weeds restroom buikding	200 sq ft	Farmworks 41%	84009-12	10%	<1qt	bps	still	
Delano	8/5/22	SHF	Weeds/ mulch beds and hard surfaces	10ac+	Farmworks 41% Glyphosate	84009-12	10%	4 gal	bps	still	

Pesticide Application Record Feb-April, 2023

Name of Applicator	Date/time	Customer/Address of Treatment	Site of application & target pest	Size of area treated	Common name of pesticide used	EPA reg. # of pesticide used	Rate and/or cocentration of pesticide	total amount of pesticide used	Type of application equiplent	wind speed direction	Additional comment
Delano	2/22/23	SHF	Weeds - pre emergent - mulch beds near office	5k sq ft approx	Jewel	58185-34	granualr	10 cups	handheld broadcast spreader	4 ene	
Delano	2/22/23	SHF	Weeds, pre emergent	12k sq ft approx	Jewel	58185-34	Granular	20 cups	handheld broadcast spreader	6 E	
Delano	2/23/23	SHF	exisitng weeds walkways	10k spot spray	Farmworks 41% Glyphosate	84009-12	10%	1 gal	backpack sprayer	still	
Delano	3/21/23	SHF	front of house and fromal garden	3k approx	Jewel	58185-34	Ganular	28 cups	Handheld broadcast spreader	8WNW	
Delano	4/13/23	Cedar Lane	parking lot islands and hard surfaces	15ac +	Farmworks 41% Glyphosate	84009-12	10%	8 Gal	utility vehicle mounted sprayer	8n	
Dealno	4/13/23	Harford Center 4n Earlton rd	vegetation around buildings	2k sq ft	Farmworks 41% Glyphosate	84009-12	10%	2 gal	utility vehicle mounted sprayer	8w	spot spray/heavy vegetation
Delano	4/13/23	SHF	mulck beds	12k sq ft approx	Farmworks 41% Glyphosate	84009-12	12%	4 gal	utility vehicle mounted sprayer	6wsw	
Dealno	4/19/23	Harford Ctr. 4 north earlton rd	cut vines	4 sq ft approx	Tordon RTU	62719-31	Full strength	3 oz	applicator bottle	na	
Delano	4/19/23	Edgely Grove Farm - main house	cut vines and stumps	2 sq ft approx	Tordon RTU	6219-31	Full Strength	2 Oz	applicator bottle	na	
Delano	4/26/23	Annies playground	Cut vines and stumps.	10 sq ft approx							

Pesticide Application Record - May,2023

Name of Applicator	Date/time	Customer/Address of Treatment	Site of application & target pest	Size of area treated	Common name of pesticide used	EPA reg. # of pesticide used	Rate and/or cocentration of pesticide	total amount of pesticide used	Type of application equiplent	wind speed direction	Additional comment
Delano	5/1/23	EGF Annie's playground	cut stumps -	5 sq. ft	Stump Stop	42750-173-84009	full strength	8 oz	applicator bottle	/na	playground cloed
Delano	5/1/23	EGF Annie's playground	cut stumps -	4 sq ft	Tordon RTU	6219-31	full strength	6 oz	applicator bottle	n/a	playground closed
Delano	5/1/23	EGF Annie's playground	mulch beds/weeds	5000 sq ft	Farmworks 40% Glyphosate	84009-12	10%	8 oz	Backpack sprayer	snw	playground closed.
Delano	5/8/23	EGF Annie's Playground	hard surfaces	10k sq ft+	Farmworks 40% Glyphosate	84009-12	10%	16 oz	Backpack sprayer	7 nw	playground closed
Delano	5/16/23	Library Admin bldg. -- Brass Mill rd.	cut stumps -	4 sq ft	Stump Stop	82750-173-840-09	Full Strength	8oz	applicator bottle	na	
Delano	5/18/23	SHF	mulch beds/weeds	300 sq ft	Jewel	58185-34	granuar	6 cups	handheld broadcast spreader	sse 4	
Delano	5/31/23	FHHAC (Kids 1st)	Mulch beds/hard surfcaes weeds	5k sq ft+	Farmworks 40% Glyphosate	84009-12	10%	2 gal	Backpack sprayer	ene4	
Delano	5/31/23	Grove - Harford Agricultural ctr	mulch beds hard surface weeds	2k sq ft	Farmworks 40% Glyphosate	84009-12	10%	1/2 gal	backpack sprayer	still	
Delano	5/31/23	F&O HQ	mulch beds	1k sq ft	Farmworks 40% Glyphosate	84009-12	10%	1qt	backpack sprayer	still	
Delano	5/31/23	Shuck's Rd Park	mulch beds, hard surface weeds	10 ac+	Farmworks 40% Glyphosate	84009-12	10%	5 gal	backpack sprayer	ne 6	spot spray

Pesticide Application Record - June 2023

Name of Applicator	Date/time	Customer/Address of Treatment	Site of application & target pest	Size of area treated	Common name of pesticide used	EPA reg. # of pesticide used	Rate and/or cocentration of pesticide	total amount of pesticide used	Type of application equiplent	wind speed direction	Additional comment
Delano	6/2/23	SHF	Event area - biting insects	3 ac+	Cutter Backyard bug control	9688-262-121	Mixed by applicator bottle	44oz	hose sprayer applicatorpa kaging	nne3	
Delano	6/2/23	SHF	Tent frame	< 1sq ft	Spectracide wasp and hornet killer	9688-190-8845	full strength	2 oz	aeresol can		
Delano	6/7/23	Record rd park	parking lot hard surface cracks weeds	20k+	Farmworks 40% Glyphosate	84009-12	10%	2 gal	utility vehicle mounted sprayer	nw8	
Delano	6/7/23	Record rd park	cut stumps and vines	2 sq ft	Tordn rtu	6219-31	full strngth	4 oz	applicator bottle	na	
Delano	6/7/23	Lynn stacie getz	weeds mulch beds and hard surface cracks	10k+	Farmworks 40% Glyphosate	84009-12	10%	2 gal	utility vehicle mounted sprayer	nnw8	spot spray
Delano	6/7/23	Cedar land complex	Weeds, parking lot islands and hard surfaces	10 ac+	Farmworks 40% Glyphosate	84009-12	10%	20 gal	utility vehicle mounted sprayer	nw 10	
Delano	6/7/23	SHF	Hard surface and some mulch beds weeds.	10 ac+	Farmworks 40% Glyphosate	84009-12	10%	4 gal	utility vehicle mounted sprayer	nnw5	
Delano	6/26/23	ERTC	Hard srufaces, AC enclosure	5 ac+	Farmworks 40% Glyphosate	84009-12	10%	4 gal	BPS	still	spot spray
Delano	6/26/23	HCG Parkng lot (Firestone and Kahoe)	hard surfaces	5ac +	Farmworks 40% Glyphosate	84009-12	10%	1 gal	bps	still	spot spray

Maryland ENVIRONMENTAL SERVICE

Harford County Noxious Weed Control Program Hebicide Summary FY23

	County Highways					HWDC &Other Environmental Properties						Other Properties within the County										SHA					
Date	RoundUp Powermax 3 (Gal.)	Ranger Pro (Gal.)	Transline (Gal.)	Hi-Dep (Gal.)	80/20 Surf. (Gal.)	RoundUp Powermax 3 (Gal.)	Ranger Pro (Gal.)	Hi-Dep (Gal.)	Transline (Gal.)	Platoon (Gal.)	80/20 Surf. (Gal.)	Garlon 3A (Gal.)	RoundUp Custom (Gal.)	RoundUp Powermax 3 (Gal.)	Ranger Pro (Gal.)	Hi-Dep (Gal.)	Transline (Gal.)	Platoon (Gal.)	90/10 Surf. (Gal.)	80/20 Surf. (Gal.)	Date	Roundup Custom (Gal.)	Razor Pro (Gal.)	Transline (Gal.)	80/20 Surf. (Gal.)	Platoon (Gal.)	90/10 Surf. (Gal.)
July-22	0.00	2.00	0.00	0.00	1.00	0.00	0.50	0.00	1.00	0.00	1.50	0.00	0.00	2.00	4.50	0.00	1.00	0.00	0.00	4.25	July-22	0.00	0.00	0.00	0.00	0.00	0.00
August-22	0.00	3.00	0.00	0.00	2.00	0.00	20.00	0.00	0.00	0.00	13.00	0.00	0.00	0.00	14.00	0.00	0.00	0.00	0.00	10.00	August-22	0.00	0.00	0.00	0.00	0.00	0.00
September-22	0.00	8.50	0.00	0.00	6.00	0.00	8.00	0.00	0.00	0.00	5.00	0.00	3.00	0.00	16.50	6.00	0.00	0.00	1.50	16.50	September-22	3.00	0.00	0.00	0.00	0.00	1.50
October-22	0.00	1.00	0.00	0.00	0.25	0.00	0.00	0.00	0.00	0.00	0.00	0.00	0.00	0.00	1.50	0.00	0.00	0.00	0.00	1.50	October-22	0.00	0.00	0.00	0.00	0.00	0.00
November-22	0.00	0.00	0.00	0.00	0.00	0.00	0.00	0.00	0.00	0.00	0.00	0.00	0.00	0.00	0.00	0.00	0.00	0.00	0.00	0.00	November-22	0.00	0.00	0.00	0.00	0.00	0.00
April-23	0.00	0.00	0.00	0.50	0.25	0.00	0.75	0.50	0.00	0.00	0.75	0.00	0.00	0.00	0.00	0.00	0.00	0.00	0.00	0.00	April-23	0.00	0.00	0.00	0.00	0.00	0.00
May-23	0.00	0.00	0.00	1.00	0.25	3.50	0.00	2.50	0.00	0.00	3.00	4.00	0.00	0.00	3.00	4.00	1.00	0.50	0.00	4.75	May-23	0.00	0.00	1.00	1.50	0.50	0.00
June-23	2.00	0.00	0.00	1.50	1.50	2.00	0.00	0.00	0.00	1.00	1.50	0.00	0.00	4.00	0.00	1.50	0.00	10.50	0.00	9.00	June-23	0.00	0.00	0.00	6.00	10.50	0.00
Totals (Gallons)	**2.00**	**14.50**	**0.00**	**3.00**	**11.25**	**5.50**	**29.25**	**3.00**	**1.00**	**1.00**	**24.75**	**4.00**	**3.00**	**6.00**	**39.50**	**11.50**	**2.00**	**11.00**	**1.50**	**60.50**	**Totals (Gallons)**	**3.00**	**0.00**	**1.00**	**7.50**	**11.00**	**1.50**

County Highways

RoundUp Powermax 3 (Gal.)	**2.00**
Ranger Pro (Gal.)	**14.50**
Transline (Gal.)	**0.00**
Hi-Dep (Gal.)	**3.00**
80/20 Surf. (Gal.)	**11.25**

HWDC &Other Env. Properties

RoundUp Powermax 3 (Gal.)	**5.50**
Ranger Pro (Gal.)	**29.25**
Hi-Dep (Gal.)	**3.00**
Platoon (Gal.)	**1.00**
Transline (Gal.)	**1.00**
80/20 Surf. (Gal.)	**24.75**

Other Properties within the County

Garlon 3A	**4.00**
RoundUp Custom	**3.00**
RoundUp Powermax 3 (Gal.)	**6.00**
Ranger Pro (Gal.)	**39.50**
Hi-Dep (Gal.)	**11.50**
Transline (Gal.)	**2.00**
Platoon (Gal.)	**11.00**
90/10 Surf. (Gal)	**1.50**
80/20 Surf. (Gal.)	**60.50**

SHA

Roundup Custom (Gal.)	**3.00**
Razor Pro (Gal.)	**0.00**
Transline (Gal.)	**1.00**
80/20 Surf. (Gal.)	**7.50**
Platoon (Gal.)	**11.00**
90/10 Surf. (Gal.)	**1.50**

Pesticide Application Record - July and August 2023 (FY 24)

Name of Applicator	Date/time	Customer/Address of Treatment	Site of application & target pest	Size of area treated	Common name of pesticide used	EPA reg. # of pesticide used	Rate and/or cocentration of pesticide	total amount of pesticide used	Type of application equiplent	wind speed direction	Additional comment
Delano	7/5/2023	Robert copenhave park	hard surfaces weeds	1/2 ac approx	Farmworks 41% glyohosate	84009-12	10%	8 oz	BPS	still	spot spray.
Delano	7/5/2023	Eden Mill nature center	Buffer trail poison ivy	1/4 mile of trail	Farmworks 41% glyohosate	84009-12	10%	1 gal	bps	still	poison ivy targeted only.
Delano	7/3/2023	Flying point park	Weeds flower beds	600 sq ft	Farmworks 41% glyohosate	84009-12	10%	16 oz	bps	5 ene	heavy vegetation in spots.
Delano	7/12/2023	Equestrian Ctr	front flower beds	2k sq ft	Jewel	58185-34	granual full strength	8 cups	handheld broadcast spreader	7.2wsw	
Delano	7/20/2023	SHF	shrubs, japanese beetle and hornworm	200 sq ft	Triazicide	9688-277-8845	applicator mixed	4 oz	hose end applicator	still	
Delano	7/20/2023	SHF	Weeds, hard surfaces and mulch beds	10 ac+	Farmworks 41% glyohosate	84009-12	10%	4 gal	bps	5s	
Delano	7/21/2023	Prospect mill park	hard surface weeds	10ac+	RM3 Total Vegetation Control	84009-3	7.3 oz/gal	8 gal	vehicle mounted sprayer	5.8 w	
Delano	7/21/2023	Cedar lane Park	parkng islands and hard surfaces	20ac+	RM3 Total Vegetation Control	84009-3	7.3 oz/gal	15 gal	vehicle mounted sprayer	4.6w	
Delano	7/21/2023	Otter point landing	hard surfaces weeds	500 sq ft approx	Farmworks 41% glyohosate	84009-12	10%	8 oz	Backpack sprayer	3.7w	
Delano	7/21/2023	Anita C Leight center.	poison ivy in display garden	1k sq ft approx	Farmworks 41% glyohosate	84009-12	10%	8oz	Backpack sprayer	3w	

Delano	7/24/2023	Lin Stacie Getz	hard surface weeds	1400 sq ft approx	Farmworks 41% glyohosate	84009-12	10%	16 oz	Backpack sprayer	6.2 E	
Delano	7/25/2023	Lynn Stacie Getz	Mulch bed/weeds	3k sq ft approx	Farmworks 41% glyohosate	8409-12	10%	1 gal	Backpack sprayer	3.3se	heavy application, want to revert area to turf grass
Delano	7/25/2023	Lynn Stacie getz	cut stumps	10 sq inches	Tordon RTU	6219-31	full strength	1 oz	bottle applicator	NA	
Delano	7/25/2023	Tucker Feild	weeds between football feilds	1k sq ft	RM3 Total Vegetation Control	84009-3	7.3 oz/gal	1/2 gal	Backpack sprayer.	6.7 s	
Delano	7/31/2023	HdGAC	cut stumps near parking area	10 sq in	Tordon RTU	6219-31	full strength	>1oz	applicator bottle	na	
Delano	8/7/2023	F&O 611 fountain green rd.	weeds fenceline	600 linear ft	RM3 Total vegetation control	84009-3	7.3 oz/gal	2 gal	Backpack sprayer	3 ne	
Delano	8/9/2023	SHF, old greenhouse/shop	wasp nest	12 sq inches	Spectracide wasp and hornet killer	9688-190-8845	full strength	20 oz	aerosol can	wnw4	
Delano	8/14/2023	F&O 611 fountain green rd.	weeds perimeter outside of fenceline.	6k sq ft approx	Farmworks 41% Glyposate	84009-12	10%	2 gal	BPS		
Delano	8/16/2023	Lynn Stacie Getz playground	all vegetation behind main sign.	400 sq ft	Farmworks 41% Glyposate	84009-12	10%	16 oz	bps	4.2 NE	
Delano	8/17/2023	SHF	cut stump	2 sq ft	Farmworks 41% Glyposate	84009-12	full strength	<1oz	poured directly from bottle cap		
Delano	8/23/23/	ERTC	fence line	650 linear ft	RM3 Total vegetation control	84009-3	7.3 oz/gal	2 gal	Backpack sprayer		
Delano	8/28/2023	District Courtheouse	Hard surfaces	20k Sq ft	RM3 Total vegetation control	84009-3	7.3 oz/gal	2 gal	Backpack sprayer	2.2n	spot spray
Delano	8/28/2023	23 Courtland St	Hard surfaces	200 sq ft	RM3 Total vegetation control	84009-12	7.3 oz/gal	8 oz	Backpack sprayer	still	
Delano	8/28/2023	HC Health department lot (Hayes St Lot)	hard surfaces	2k sq ft approx	RM3 Total vegetation control	84009-3	7.3 oz/gal	1 gal	bps	4.2 nne	

Delano	8/29/2023	Churchville (Glenville)	Around building.	250 linear feet	RM3 Total vegetation control	84009-3	7.3 oz/gal	1/2 gal	BPS	2.2 nne	
Delano	8/30/2023	Cedar Lane	mulch areas	30ksq ft+	RM3 Total vegetation control	84009-3	7.3 oz/gal	13 gal	Utility vehicle mounted sprayer	5.5 nne	
Delano	8/30/2023	Abringdon park/dog park	driveway guardrail	1k linear ft.	RM3 Total vegetation control	84009-3	7.3 oz/	1 gal	Utility vehicle mounted sprayer	6ne	
Delano	8/31/2023	SHF	cut stump	15 sq inches	Tordon RTU	6219-31	full strength	<1oz	applicator bottle	na	

Pesticide Application Record - Spring and Summer 2024

Name of Applicator	Date/time	Customer/Address of Treatment	Site of application & target pest	Size of area treated	Common name of pesticide used	EPA reg. # of pesticide used	Rate and/or cocentration of pesticide	total amount of pesticide used	Type of application equiplent	wind speed direction	Additional comment
Delano	3/13/24	Darlington Park	mulch around trees	1k sq ft approx	Jewel	58185-34	Full strength granualr	8 cups	handheld broadcast spreader	ene 6	
Delano	3/15/24	SHF	Mulch beds	1ac+	Jewel	58185-34	Full strength granualr	48 cups	handheld broadcast spreader	still	
Delano	4/14/24	Cedar Lane complex	parking lot islands and craks	7.3 ac.	Farmworks 41%glyphosate	84009-12	10%	12 gal	vehicle mounted sprayer	still	Spot spray
Delano	4/14/12	Prospect mill park	parking lot cracks	5.3 ac	Farmworks 41%glyphosate	84009-12	10%	8 gal	vehicle mounted sprayer	8 sse	spot spray
dealno	4/14/12	SHF	walkways and mulch beds	.38 acres	Farmworks 41%glyphosate	84009-12	10%	2 gal	vehicle mounted sprayer	4 sse	spot spray
Delano	4/18/2024	SHF	Mulch beds near gazebo	1K SQ FT	Farmworks 41%glyphosate	84009-12	10%	1/2 Gal	vehicle mounted sprayer	still	spot spray
Delano	5/7/2024	Edgewater village park	Hard surfaces	10k sq ft	Farmworks 41%glyphosate	84009-12	10/	1 gal	backpack sprayer	7e	spot spray
Delano	5/8/24	Cedar Lane Complex	Parking islands and cracks	7.3 ac	Farmworks 41%glyphosate	84009.2	10%	9 gal	vehicle mounted sprayer	7sse	spot spray
Delano	5/8/2024	Prospect mill park	hard surfaces	5.3 ac	Farmworks 41%glyphosate	84009-2	10%	1 gal	vehicle mounted sprayer	9ese	spot spray
Delano	6/4/24	HCGHQ-PLOT (Tire Lot)	weeds hard surfaces	10ac+	Farmworks 41% glyphosate	84009-12	10%	1 qt	bps	3.5 e	spot spray - also included kahoe building.
Delano	6/5/24	Perryman Park	Weeds along fenceline	3/4 mile+ of fenceline	RM43	84009-3	7.3 oz/gal	5 gal	utility vehicle mounted sprayer	3.8 se	3.8
Delano	6/5/24	Cedar Lane	parking lot islands	7.3 Ac	rm43	84009-3	7.3 oz/gal	8 gal	utility vehicle mounted sprayer	1.4 e	spot spray
Delano	6/5/24	Eden mill	trails/ poison ivy	1.5 linear miles of trail spot spray	Farmworks 41% glyphosate	84009-12	10%	2 qt	bps	3.5 e	spot spray
Delano	6/13/24	SHF	Weeds hard surfaces	5 ac+	rm43	84009-3	7.3 oz/gal	1gal	bps	still	spot spray

Delano	6/18/24	Library Admin Bldg	Fences and area surrounding parking	1500 sq ft	rm43	84009-3	7.3 oz/gal	2 gal	Bps	5.4 se	heavy vegetation
Delano	6/20/24	SHF	Outter wall of workshop	10 sq ft	Farmworks 41% glyphosate	84009-12	10%	8 oz	bps	7ssw	

Maryland ENVIRONMENTAL SERVICE

Harford County Noxious Weed Control Program Hebicide Summary FY24

	County Highways					HWDC &Other Environmental Properties						Other Properties within the County								
Date	RoundUp Powermax 3 (Gal.)	Ranger Pro (Gal.)	Transline (Gal.)	Hi-Dep (Gal.)	80/20 Surf. (Gal.)	RoundUp Powermax 3/Custom (Gal.)	Ranger Pro (Gal.)	Hi-Dep (Gal.)	Bucaneer (Gal.)	Platoon (Gal.)	80/20 Surf. (Gal.)	Garlon 3A (Gal.)	Bucaneer (Gal.)	RoundUp Powermax 3 (Gal.)	Ranger Pro (Gal.)	Hi-Dep (Gal.)	Transline (Gal.)	Platoon (Gal.)	90/10 Surf. (Gal.)	80/20 Surf. (Gal.)
July-23	0.00	3.00	0.00	0.00	1.50	1.00	1.00	0.00	0.00	0.00	3.00	0.00	0.00	4.00	0.00	10.50	0.00	0.00	1.00	6.50
August-23	0.00	3.00	0.00	0.00	2.00	0.00	10.00	0.00	0.00	0.00	7.50	0.00	0.00	3.00	1.00	0.00	0.00	0.00	0.00	3.00
September-23	0.00	10.00	0.00	0.00	7.50	0.00	12.00	0.00	0.00	0.00	8.00	0.00	11.00	9.00	0.00	0.00	0.00	0.00	0.00	10.25
October-23	0.00	1.00	0.00	0.00	0.50	0.00	0.00	11.00	0.00	0.00	6.50	0.00	8.50	2.00	0.00	1.50	0.00	0.00	0.00	7.50
November-23	0.00	0.00	0.00	0.00	0.00	0.00	0.00	0.00	0.00	0.00	0.00	0.00	0.00	0.00	0.00	0.00	0.00	0.00	0.00	0.00
April-24	0.00	0.00	0.00	6.00	1.50	0.00	0.00	4.00	7.50	0.00	8.50	0.00	0.00	0.00	0.00	1.00	0.00	0.00	0.00	0.25
May-24	0.00	0.00	0.00	4.00	2.00	0.00	0.00	0.00	7.50	0.00	4.50	0.00	9.00	5.00	1.00	2.00	0.00	0.00	0.00	10.50
June-24	0.00	0.00	0.00	0.00	0.00	2.00	0.00	0.00	7.50	0.00	6.00	3.50	6.00	0.00	0.00	17.50	0.00	0.00	0.00	16.50
Totals (Gallons)	**0.00**	**17.00**	**0.00**	**10.00**	**15.00**	**3.00**	**23.00**	**15.00**	**22.50**	**0.00**	**44.00**	**3.50**	**34.50**	**23.00**	**2.00**	**32.50**	**0.00**	**0.00**	**1.00**	**55.50**

County Highways

RoundUp Powermax 3 (Gal.)	**0.00**
Ranger Pro (Gal.)	**17.00**
Transline (Gal.)	**0.00**
Hi-Dep (Gal.)	**10.00**
80/20 Surf. (Gal.)	**15.00**

HWDC &Other Env. Properties

RoundUp Powermax 3 (Gal.)	3.00
Ranger Pro (Gal.)	23.00
Hi-Dep (Gal.)	15.00
Platoon (Gal.)	0.00
Bucaneer (Gal.)	22.50
80/20 Surf. (Gal.)	44.00

Other Properties within the County

Garlon 3A	3.50
RoundUp Custom	34.50
RoundUp Powermax 3 (Gal.)	23.00
Ranger Pro (Gal.)	2.00
Hi-Dep (Gal.)	32.50
Transline (Gal.)	0.00
Platoon (Gal.)	0.00
90/10 Surf. (Gal)	1.00
80/20 Surf. (Gal.)	55.50

3267	HA CO on call landscaping	Treatment Date	Applicator	Treatment method 1	Chemical used	Percent Used	Amount used	Target Species	Size of Treatment Area	Treatment method 2	Chemical used	Percent Used	Amount Used	Target Species
3744	Stillmeadow Drive Outfall Landscaping													
3801	Harford Christian School													
3852	Edwards Lane													
3921	Cedar Lane Regional													
		8/28/2024	Chimei Nguerekata 24386- 99681	Cut Stem	Garlon 3A 62719-37	41%	66 oz	Porcelain berry, bittersweet vine, english ivy	0.1 acres	N/A				
		8/29/2024	Chimei Nguerekata 24386- 99681	Cut Stem	Garlon 3A 62719-37	41%	15 oz	Porcelain berry, bittersweet vine, english ivy		Foliar	Garlon 3A 62719-37; Aquaneat 228-365	Garlon 3A @ 2.5 %; Aquaneat @ 3.5 %	0.5 gallons	Porcelain berry, bittersweet vine, english ivy, multiflora rose, wineberry, bush honeysuckle
3947	Herman Tree Screen													
3987	Edgely Grove Farm													
		5/12/2025	Chimei Nguerekata 24386- 99681	Foliar	Garlon 3A 62719-37; Aquaneat 228-365	Garlon 3A @ 2.5 %; Aquaneat @ 3.5 %	16 gallons	thistle, multiflora	2.14 acres	N/A				
		5/23/2025	Katherine Smith- 24386-100223	Foliar	Garlon 3A 62719-37; Aquaneat 228-365	Garlon 3A @ 2.5 %; Aquaneat @ 3.5 %	7.5 gallons	thistle, multiflora	0.96 acres	N/A				
		6/9/2025	Mark Reyes 24386-98948	Foliar	Garlon 3A 62719-37; Aquaneat 228-365	Garlon 3A @ 2.5 %; Aquaneat @ 3.5 %	8 gallons	thistle, multiflora	1.69 acres	N/A				
		7/14/2025	Amy Thames 24386-Registered	Foliar	Aquaneat 228-365	2%	8 gallons	thistle	1.11 acres	N/A				
3992	Harford Christian													
4032	N Harford HS-MS-ES													
		7/8/2024	Mark Reyes 24386-98948	Foliar	Aquaneat 228-365	2%	8 gallons	porcelain berry, field bindweed	1.33 acres	N/A				
		7/9/2024	Mark Reyes 24386-98948	Foliar	Aquaneat 228-365	2%	12 gallons	porcelain berry, field bindweed	1.52 acres	N/A				
		8/29/2024	Chimei Nguerekata 24386- 99681	Cut Stem	Garlon 3A 62719-37	41%	45 oz	Porcelain berry		N/A				
		8/30/2024	Chimei Nguerekata 24386- 99681	Cut Stem	Garlon 3A 62719-37	41%	45 oz	Porcelain berry	0.6 acres	N/A				
		7/8/2025	Amy Thames 24386-Registered	Foliar	Garlon 3A 62719-37; Aquaneat 228-365	Garlon 3A @ 2.5 %; Aquaneat @ 3.5 %	12 gallons	Porcelain berry, bittersweet vine, english ivy, multiflora rose, wineberry, bush honeysuckle		Foliar	Intensity One 34704-9876	0.85%	9 gallons	crabgrass
4052	Cedar Lane Add Plant													
		11/6/2024	Chimei Nguerekata 24386- 99681	Foliar	Garlon 3A 62719-37; Aquaneat 228-365	Garlon 3A @ 2.5 %; Aquaneat @ 3.5 %	2 gallons	Porcelain berry, bittersweet vine, english ivy, multiflora rose, wineberry, bush honeysuckle	0.22 acres	N/A				
4067	Church Creek Landscape													
4086	Edgewater Village													
4089	Fountain Green ES													
4139	Cedar Lane Mowing & Tree Repair													
4140	Edgewood													
4150	Roye Williams ES													
		8/6/2025	Saud Lara- 24386-Registered	Foliar	Aquaneat 228-365	4%	15 gallons	Porcelain berry, bittersweet vine, english ivy, multiflora rose, wineberry, bush honeysuckle	2.46 acres					
		8/7/2025	Saud Lara- 24386-Registered	Foliar	Aquaneat 228-365	4%	17 gallons	Porcelain berry, bittersweet vine, english ivy, multiflora rose, wineberry, bush honeysuckle	4.4 acres					
4181	Church Creek Livestakes 2025													
4189	Magnolia ES & MS													
		8/26/2025	Saud Lara- 24386-Registered	Foliar	Garlon 3A 62719-37; Aquaneat 228-365	Garlon 3A @ 2.5 %; Aquaneat @ 3.5 %	2 gallons	Porcelain berry, bittersweet vine, english ivy, multiflora rose, wineberry, bush honeysuckle, crab grass	0.54					
		8/27/2025	Saud Lara- 24386-Registered	Foliar	Garlon 3A 62719-37; Aquaneat 228-365	Garlon 3A @ 2.5 %; Aquaneat @ 3.5 %	96 gallons	Porcelain berry, bittersweet vine, english ivy, multiflora rose, wineberry, bush honeysuckle, crab grass	1.54					

4220	Magnolia bittersweet								
		7/29/2025	Saud Lara- 24386-Registered	Cut stem	Aquaneat 228-365	25%	45 oz	Bittersweet vine	
4227	Whiteford Shop								
		8/21/2025	Saud Lara- 24386-Registered	Foliar	Garlon 3A 62719-37; Aquaneat 228-365	Garlon 3A @ 2.5 %; Aquaneat @ 3.5 %	55 gallons	crab grass	
4230	Harford Glen								
		8/20/2025	Saud Lara- 24386-Registered	Foliar	Garlon 3A 62719-37; Aquaneat 228-365	Garlon 3A @ 2.5 %; Aquaneat @ 3.5 %	3 gallons	lespedeza	0.17

**Indicates no chemical was used here since June 2024. Either NNI work was not performed or it was mechanical/manual.

Harford County Noxious Weed Control Program Hebicide Summary FY25

	County Highways					HWDC &Other Environmental Properties						Other Properties within the County								
Date	RoundUp Powerma x 3 (Gal.)	Ranger Pro (Gal.)	Transline (Gal.)	Hi-Dep (Gal.)	80/20 Surf. (Gal.)	RoundUp Powermax 3/Custom (Gal.)	Ranger Pro (Gal.)	Hi-Dep (Gal.)	Bucaneer (Gal.)	Platoo n (Gal.)	80/20 Surf. (Gal.)	Garlon 3A (Gal.)	Bucaneer (Gal.)	RoundUp Powermax 3 (Gal.)	Ranger Pro (Gal.)	Hi-Dep (Gal.)	Transline (Gal.)	Platoon (Gal.)	90/10 Surf. (Gal.)	80/20 Surf. (Gal.)
July-24	0.00	3.00	0.00	0.00	1.50	1.00	1.00	0.00	0.00	0.00	3.00	0.00	0.00	4.00	0.00	10.50	0.00	0.00	0.00	6.50
August-24	0.00	3.00	0.00	0.00	2.00	0.00	10.00	0.00	0.00	0.00	7.50	0.00	0.00	9.00	1.00	0.00	0.00	0.00	4.00	3.00
September-24	0.00	10.00	0.00	0.00	7.50	0.00	12.00	0.00	0.00	0.00	8.00	0.00	11.00	9.00	0.00	0.00	0.00	0.00	0.00	10.25
October-24	0.00	1.00	0.00	0.00	0.50	0.00	0.00	11.00	0.00	0.00	6.50	0.00	8.50	2.00	0.00	1.50	0.00	0.00	0.00	7.50
November-24	0.00	0.00	0.00	0.00	0.00	0.00	0.00	0.00	0.00	0.00	0.00	0.00	0.00	0.00	0.00	0.00	0.00	0.00	0.00	0.00
April-25	0.00	0.00	0.00	0.00	0.00	0.00	0.00	1.00	3.00	0.00	1.50	0.00	0.00	0.00	0.00	0.00	0.00	0.00	0.00	0.00
May-25	0.00	0.00	0.00	0.75	0.50	0.00	0.00	1.25	7.00	0.00	2.25	0.00	0.00	0.00	0.00	0.00	0.00	0.00	0.00	0.00
June-25	0.00	0.00	0.00	0.00	0.00	0.00	0.00	2.00	6.00	0.00	2.75	0.00	0.00	0.00	0.00	0.00	2.50	0.00	2.50	0.00
Totals (Gallons)	**0.00**	**17.00**	**0.00**	**0.75**	**12.00**	**1.00**	**23.00**	**15.25**	**16.00**	**0.00**	**31.50**	**0.00**	**19.50**	**24.00**	**1.00**	**12.00**	**2.50**	**0.00**	**6.50**	**27.25**

County Highways	
RoundUp Powermax 3 (Gal.)	**0.00**
Ranger Pro (Gal.)	**17.00**
Transline (Gal.)	**0.00**
Hi-Dep (Gal.)	**0.75**
80/20 Surf. (Gal.)	**12.00**

HWDC &Other Env. Properties	
RoundUp Powermax 3 (Gal.)	1.00
Ranger Pro (Gal.)	23.00
Hi-Dep (Gal.)	15.25
Platoon (Gal.)	0.00
Bucaneer (Gal.)	16.00
80/20 Surf. (Gal.)	31.50

Other Properties within the County	
Garlon 3A	0.00
RoundUp Custom	19.50
RoundUp Powermax 3 (Gal.)	24.00
Ranger Pro (Gal.)	1.00
Hi-Dep (Gal.)	12.00
Transline (Gal.)	2.50
Platoon (Gal.)	0.00
90/10 Surf. (Gal)	6.50
80/20 Surf. (Gal.)	27.25

HARFORD COUNTY

PUBLIC WORKS

SALT MANAGEMENT PLAN

The following Salt Management Plan has been developed to guide Harford County's winter maintenance operations. It identifies key actions and strategies for the responsible use of road salt, ensuring public safety while minimizing environmental impacts, in accordance with the Maryland Statewide Salt Management Plan.

June 2025

Table of Contents

1. Preface 6
2. Introduction 6
2.1 Public Safety 6
2.2 Environmental Protection 6
2.3 Efficient Transportation System 6
2.4 Fiscal Responsibility 7
2.5 Continual Improvement 7
2.6 Local Development of Salt Management Plans 7
2.7 Purpose of this Document 7
2.8 Responsibilities 7
2.9 Vision, Mission & Mandate 8
2.10 Policy Statement 8
2.11 Application 8
2.12 Key Plan Tenants 8
3. Safety and Mobility 9
3.1 Passable Roadway Expectations 9
3.2 Class 1: Emergency Roads 10
3.3 Class 2: Main Roads 10
3.4 Class 3: Secondary Roads and Cul-de-sacs 10
3.5 Exceptions 10
3.6 Walkways and Parking Lots 11
4. Establishment of Goals to Reduce the Negative Impacts of Salt and Liquid Deicers 11
5. Materials and Equipment 11
5.1 Types of Winter Materials 12
5.2 Material Storage and Handling 12
5.3 Snow and Ice Control Equipment 13
5.3.1 County Equipment 13

5.3.2 Hired Equipment Contract for Snow Removal Services 14
6. Training Initiatives 14
7. Winter Storm Management 15
7.1 Weather and Pavement Condition Forecast 15
7.2 Pre-Storm Planning 15
7.3 Anti-Icing Operations 16
7.4 Winter Storm Operations 17
7.5 Severe Winter Storms 18
7.6 Stockpiling and Disposal of Removed Snow 19
7.7 Operations in Sensitive Areas 19
7.8 Automatic Vehicle Location (AVL) 20
8. Post Storm Operations 20
8.1 Equipment Cleaning and Maintenance 20
8.2 Material Cleanup at Storage Facilities 21
8.3 Operations Review for Continual Improvement 21
8.4 Post Storm Data Analysis 22
9. Spill Prevention and Control Plan for Winter Operations 22
9.1 Salt Spill Prevention 22
9.2 Brine Mixing and Storage Tanks 23
10. Recordkeeping and Annual Reports 23
11. Annual Winter Wrap-Up Meeting 24
12. Public Education and Outreach 24
13. Testing and Evaluation of New Materials, Equipment, and Strategies for Continual Improvement 24
14. Summary 25
15. Appendix A: Salt Management Plan Overview 26
15.1 Winter Maintenance Policies 26
15.2 Trends and Data Analysis 27

15.3 Materials Ordering and Delivery 28
15.4 Material Storage and Handling 29
15.5 Material Record Keeping 30
15.6 Equipment Upgrading 31
15.7 Equipment Calibration 32
15.8 Equipment Washing 33
15.9 Snow and Ice Control Training 33
15.10 Environmentally Sensitive Areas 34
15.11 Technology Review 35
15.12 Public Outreach and Education 36
16. Appendix B: Salt Management Plan Goals 37
16.1 Short-Term Goals 37
16.1.1 Winter Maintenance Policies 37
16.1.2 Winter Maintenance Training 37
16.2 Long-Term Goals 37
16.2.1 Equipment Upgrading 37
16.2.2 Environmentally Sensitive Areas 37
17. Appendix C: Areas and Waterways Environmentally Sensitive to Salt 38

List of Acronyms

AVL	Automatic Vehicle Location
BMP	Best Management Practice
DLA	Direct Liquid Application
DPW	Department of Public Works
GHP	Good Housekeeping Plan
LOS	Level of Service
MDE	Maryland Department of the Environment
MS4	Municipal Separate Storm Sewer System
SHA	State Highway Administration
SMP	Salt Management Plan
SOP	Standard Operating Procedure
SPCCP	Spill Prevention, Control, and Countermeasure Plan
SWPPP	Stormwater Pollution Prevention Plan
WPR	Watershed Protection & Restoration Office

1. Preface

In 2010, the Maryland State Legislature passed two bills, House Bill 0903 and Senate Bill 0775, which required the establishment of a Statewide Salt Management Plan. The legislature tasked the Maryland State Highway Administration (SHA), in conjunction with the Maryland Department of the Environment (MDE), to develop a road salt management best practices guidance document by October 1, 2011, for use by the state and local jurisdictions. This salt management guidance document aimed to mitigate the environmental impacts of salt use in the state by outlining best practices for its delivery, storage, handling, application during winter storms, and post-storm cleanup. The primary goal and objective of the Statewide Salt Management Plan is to provide a framework for highway agencies to deliver safe, efficient roadway systems during winter storms in a cost effective, environmentally sound, and sustainable manner.

2. Introduction

The purpose of this document is to outline strategies and guidelines for the effective use of salt during winter operations in Harford County, Maryland. Its aim is to minimize the environmental impacts of salt runoff while maintaining safe roadway conditions on the 2,171.8 lane miles of County maintained roadways, in addition to parking lots and walkways of County-owned properties.

This living document will be updated regularly to incorporate the latest advancements in snow and ice control practices, materials and technologies. The County has already adopted several innovative solutions to reduce salt usage during winter storms.

2.1 Public Safety

Effective winter storm maintenance is essential to ensure the safety of both the travelling public and road maintenance personnel. This Salt Management Plan (SMP) places safety as its primary goal, with environmental stewardship as a closely aligned objective.

2.2 Environmental Protection

Because high concentrations of salt can negatively affect highway structures, roadside soil, vegetation, and nearby waterways, this plan's Best Management Practices (BMPs) will emphasize the careful handling and application of winter materials, such as rock salt and brine solutions, while aiming to minimize their overall use. By applying the appropriate amount of salt or using environmentally friendly alternatives, the County can maintain roadway safety while minimizing environmental impacts.

2.3 Efficient Transportation System

Efficient transportation systems are vital for sustaining economic stability and ensuring the quality of life expected by County residents and visitors. It is also essential to keep roads passable for first responders. This SMP has been developed with these priorities in mind.

2.4 Fiscal Responsibility

The County Executive drafts Harford County's operating budgets, which are then subject to approval by the County Council. Consequently, the SMP will align with the fiscal limitations established through this budgeting process.

2.5 Continual Improvement

To reduce salt usage and its environmental impacts, the County is committed to enhancing its current practices. This includes ongoing evaluation of equipment, goals, materials, methods, and technologies to support continuous improvement in sustainable and effective salt management. Recognizing that some changes may have fiscal implications, the County understands that improvements will need to be implemented incrementally.

2.6 Local Development of Salt Management Plans

MDE issued Harford County's 5th generation Municipal Separate Storm Sewer System (MS4) Permit on December 30, 2022. Part IV.D.4.d of the MS4 Permit establishes the requirement that *"the County shall reduce the use of winter weather deicing and anti-icing materials, without compromising public safety, by developing a County Salt Management Plan (SMP) to be submitted to the Department in its third year annual report and implemented thereafter*." In addition, the MS4 Permit states that "*the SMP shall be based on the guidance provided on best road salt management practices described in the Maryland Department of Transportation, State Highway Administration's Maryland Statewide Salt Management Plan, developed and updated annually as required by the Maryland Code, Transportation §8-602.1.*" This plan has been prepared in accordance with the requirements of the MS4 Permit.

2.7 Purpose of this Document

The purpose of this document is to establish a policy and procedural framework that enables Harford County to continuously improve the management of deicing materials used in winter maintenance operations. This approach aligns with the best practices outlined in the Statewide Salt Management Plan. This management plan is designed to be dynamic, allowing the County to evaluate and gradually implement new strategies, technologies and operational changes in a fiscally responsible manner while ensuring that roadway safety remains uncompromised.

2.8 Responsibilities

Several County agencies play a vital role in ensuring public safety through effective winter road maintenance. These agencies are responsible for developing, implementing, reviewing, and continuously improving the success of the SMP. Through a coordinated effort, the following County agencies work together to reduce the environmental impacts of salt use while maintaining safe travel conditions:

- Department of Public Works (DPW) Division of Highways
- Department of Parks & Recreation

- Board of Education
- Harford Community College
- DPW Division of Water & Sewer
- DPW Bureau of Solid Waste Services

2.9 Vision, Mission & Mandate

Vision: *Harford County is committed to being recognized as a leader in advancing winter maintenance operations and reducing environmental impacts while ensuring public safety.*

Mission: *The County's operations staff will optimize the use of deicers across all County-maintained roads, while actively working to minimize their environmental impact.*

Mandate: *The County's operations staff will maintain safe winter conditions for drivers and pedestrians, following service level policies and funding set by the Administration and County Council.*

2.10 Policy Statement

The County is committed to delivering efficient and effective winter maintenance to ensure the safety of all road users. These efforts will align with best practices and recognized standards, while striving to minimize adverse environmental impacts. These commitments will be achieved through the following actions:

- Adhering to the procedures contained within the SMP.
- Monitoring, reviewing, and updating the SMP annually to incorporate new technologies and developments, and to ensure the continued effectiveness of the plan.
- Committing to ongoing training and education on the use of deicing materials.

2.11 Application

The Director of the DPW will formally endorse the SMP, which will apply to all Harford County employees and contractors involved in winter maintenance operations.

2.12 Key Plan Tenants

According to the Statewide Salt Management Plan, the following best practices should serve as a foundation for implementing strategies to minimize the environmental impact of salt use in Maryland. These practices include:

- Safety and Mobility
- Establishment of Goals to Reduce the Negative Impacts of Salt and Liquid Deicers
- Materials and Equipment
- Training Initiatives
- Winter Storm Management
- Post Storm Operations

- Spill Prevention and Control Plan for Winter Operations
- Recordkeeping and Annual Reports
- Annual Winter Wrap-Up Meeting
- Public Education and Outreach
- Testing and Evaluation of New Materials, Equipment, and Strategies for Continual Improvement

3. Safety and Mobility

Harford County is fully committed to ensuring public safety and mobility during winter storms in a cost-effective manner, while striving to minimize environmental impacts. Outside of winter events, the County's Level of Service (LOS) framework guides the prioritization of road maintenance. However, during a winter storm, these LOS priorities may be adjusted to respond to the immediate needs of the community.

In alignment with the Maryland Statewide Salt Management Plan, Harford County defines a "passable roadway" as a roadway surface that is free of snow drifts, snow ridges, and as much ice and snow as is practical, allowing vehicles to travel safely at a "reasonable speed for the conditions." During and immediately following winter storm events, "reasonable speed" is defined as the speed at which a vehicle can travel without losing traction. It is understood that this speed is typically lower than the posted speed limit.

The following priority classifications have been adopted by the County DPW – Division of Highways based on the direction of the Maryland Statewide Salt Management Plan.

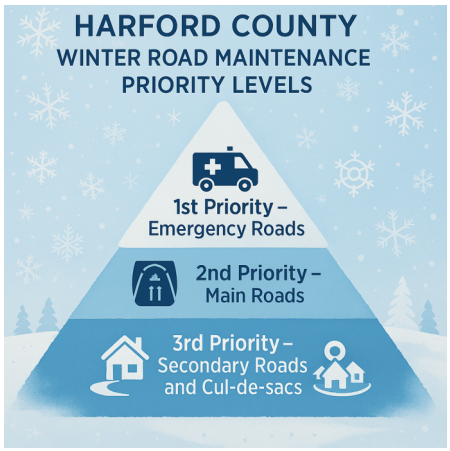

3.1 Passable Roadway Expectations

As previously noted, a passable roadway is defined as a roadway surface that is free of snow drifts, snow ridges, and as much ice and snow as is practical, allowing vehicles to travel safely at a reasonable speed for the conditions. It is important to distinguish this from bare pavement, which is completely free of ice, snow, and moisture. Bare pavement conditions are typically achieved

only after weather conditions have improved and all snow and slush have been cleared from the roadway.

3.2 Class 1: Emergency Roads

For winter events forecasted to begin as snow or sleet, emergency roads may be pre-treated with salt brine prior to the anticipated start of the event. Pre-treatment helps prevent frozen precipitation from bonding to the roadway surface.

When snowfall begins, the County initiates snow response operations by applying salt to roadways. Once snow accumulation reaches one inch or more, crews transition to plowing operations. Plowing remains the primary method for snow removal. The County will strive to prevent snow from packing on all critical lane areas. Snow plows will operate continuously in both directions to keep all travel lanes clear and accessible. Salt or salt brine will be re-applied only as needed to prevent bonding of precipitation to the roadway surface.

3.3 Class 2: Main Roads

For winter events forecasted to begin as snow or sleet, some main roads may be pre-treated with salt brine prior to the anticipated start of the event. Pre-treatment helps prevent frozen precipitation from boding to the roadway surface.

When snowfall begins, the County initiates snow response operations by applying salt to roadways. Once snow accumulation reaches one inch or more, crews transition to plowing operations. Plowing remains the primary method for snow removal. The County will strive to prevent snow from packing on all critical lane areas. Snow plows will operate continuously in both directions to keep all travel lanes clear and accessible. Salt or salt brine will be re-applied only as needed to prevent bonding of precipitation to the roadway surface.

3.4 Class 3: Secondary Roads and Cul-de-sacs

Secondary Roads and Cul-de-sacs may be treated once both emergency and main roads are deemed passable. Plowing remains the primary method for snow removal in these areas. Snow plows will operate continuously in both directions to keep all travel lanes clear and accessible. After the snow has stopped, the County initiates cleanup mode and clears all snow from the roadway, pushing it to the edge of the street on both sides, up to the curb. Salt or salt brine will be re-applied only as needed to prevent bonding of precipitation to the roadway surface.

3.5 Exceptions

Exceptions to these guidelines may arise when multiple winter storms occur in such quick succession that achieving passable roadways or bare pavement between events is not feasible. Factors such as storm severity, roadway temperatures, geography, time of day, day of the week, and the availability of resources will influence how quickly bare pavement conditions can be restored.

Maintaining passable roadways during these events is essential to ensuring that emergency responders can achieve adequate response times safely.

3.6 Walkways and Parking Lots

Sidewalks and walkways at 74 County-owned properties are treated by Department of Parks & Recreation contractors with TruMelt™ 3% Magnesium Pellets. TruMelt™ 3% Magnesium Pellets is a blend of 97% sodium chloride and 3% magnesium pellets and melts effectively down to 0° F. Parking lots and roadways on these County-owned properties are treated with standard road salt by Department of Parks & Recreation contractors.

On 57 Harford County Public School properties, sidewalks and walkways are maintained by Board of Education custodial staff, while parking lots and roadways are treated by facilities management staff.

At Harford Community College, staff and contractors apply roadway salt to all asphalt surfaces. For concrete areas, concrete-safe salt and liquid ice melt are used to ensure surface integrity and safety.

4. Establishment of Goals to Reduce the Negative Impacts of Salt and Liquid Deicers

Harford County's SMP outlines best practices that balance the use of snow and ice control measures to ensure roadway safety with the responsible management of those materials to minimize environmental impact. The primary goal is to maintain safe and efficient roadways during winter storms while promoting environmental stewardship.

Understanding how storm intensity correlates with material usage is a key component in the County's plan. The County will track salt usage and other control efforts against the severity of winter storms to establish baseline usage.

Due to the unpredictable nature of winter storms, setting annual salt reduction targets is challenging. Instead, these measurements will be used to identify and respond to usage trends over time. By analyzing these trends and adhering to a responsible plan, the County can establish long-term goals to reduce salt usage and its environmental impact – while continuing to prioritize roadway safety and mobility.

5. Materials and Equipment

Winter operations require specialized plowing and application equipment, as well as appropriate materials, to keep roads safe and passable. All equipment will be properly serviced, calibrated, and repaired as necessary prior to the start of the winter season to ensure optimal performance.

In addition, winter maintenance materials will be stored, handled, and distributed correctly throughout the roadway network to maximize their effectiveness. Proper preparation of materials is essential for environmentally responsible winter operations.

5.1 Types of Winter Materials

Salt (sodium chloride) is the primary snow and ice control material used by many agencies across the country. It remains the most effective option for winter storms in Maryland due to its affordability, ease of storage, and widespread availability. Granular road salt is primarily applied to public roadways and County-owned parking lots during active storms once precipitation has begun. While it will continue to serve as the County's primary deicing material, minimizing its use is critical to reduce environmental impacts.

The second most used material is salt brine (liquid sodium chloride), which is primarily applied in anti-icing operations before a storm begins. It can also be used during storms as a Direct Liquid Application (DLA). Salt brine becomes significantly less effective as temperatures drop below 15-20°F (-9 to -7°C). Salt brine is applied to roadways as a pre-treatment during anti-icing operations, typically between two hours and two days before the onset of frozen precipitation. This helps prevent snow and ice from bonding to the pavement. Brine is also used to pre-wet granular salt, reducing bounce and scatter and enhancing its effectiveness.

On unpaved roads, aggregates like sand are sometimes applied alone or combined with salt to improve traction. The use of aggregates generally requires the removal of restrictive devices located in the spreader and the restrictive plates must be properly installed to ensure the correct distribution. Although aggregates have no snow or ice melting capabilities, they provide traction by increasing friction on slippery or icy surfaces. However, aggregates can clog drainage systems and require intensive post-storm cleanup. When used, they should be applied sparingly.

Sidewalks and walkways at County-owned properties are treated by Department of Parks & Recreation contractors with TruMelt™ 3% Magnesium Pellets, a blend of 97% sodium chloride and 3% magnesium pellets.

5.2 Material Storage and Handling

The County is committed to maintaining its salt storage infrastructure to ensure safe and environmentally responsible operations. Proper upkeep of salt structures, combined with effective housekeeping practices, allows the County to:

- Safely store road salt throughout the year,
- Prevent environmental contamination from salt runoff,
- Ensure readiness for winter road treatment operations.

Currently, the County operates seven salt domes located across five facilities. Monthly inspections and maintenance are conducted to preserve the domes' structural integrity and ensure compliance with environmental standards.

A new salt barn is being planned to supplement the existing salt dome at the Abingdon Highway Maintenance Facility. Its expanded design will allow dump truck loading operation to occur entirely under cover, significantly reducing the risk of salt spills and environmental exposure. The new salt barn is scheduled to be completed prior to the beginning of the 2026/2027 winter season.

Salt brine is stored in five well-maintained, clearly labeled, double-walled 5,500-gallon storage tanks at four facilities. Salt brine storage tanks are inspected monthly and routine maintenance is performed on all tank components, including fittings, valves, and pumps to ensure they remain in proper working condition. To enhance operational efficiency, the County installed brine storage tanks at all maintenance facilities.

If any drips or leaks are detected, maintenance or repairs are carried out as promptly as possible. Until repairs can be completed, leaks are contained to prevent environmental contamination and ensure operational safety.

5.3 Snow and Ice Control Equipment

Equipment will be selected based on the operational needs of the County. Harford County is committed to purchasing and utilizing the most effective snow and ice control equipment available, within the constraints of its approved budget.

5.3.1 County Equipment

Dump trucks will be equipped with well-maintained front plows to remove as much snow as possible from roadways. Additionally, dump trucks will have properly maintained salt spreaders and spinners that distribute salt efficiently and minimize waste. Whenever possible, the County will invest in electronic salt spreading equipment. These systems have fixed application rates that operators cannot adjust, reducing material overuse and improving data accuracy.

All salt spreading equipment, regardless of type, will be calibrated annually before the winter season begins and maintained as needed. Proper calibration is essential for effective and responsible salt management.

The County currently deploys a diverse fleet of equipment for snow removal operations on County roads, including:

- 49 pickup trucks with snow plows and salt spreaders
- 47 single-axle dump trucks with snow plows and salt spreaders
- 14 single-axle dump trucks with snow plows and brine pre-wet applicator systems
- 6 tri-axle dump trucks with snow plows and brine pre-wet applicator systems
- 5 graders with V-shaped snow plows
- 4 brine pre-treatment applicator inserts
- 1 one-ton dump truck with snow plow and salt spreader
- 8 loaders
- 4 backhoes

- 3 skid loaders
- 1 loader-mounted snowblower

Additional snow removal equipment is operated by other County departments:

- Department of Parks and Recreation:
  - 7 single-axle dump trucks with snow plows and salt spreaders
  - 7 pickup trucks with snow plows and salt spreaders
- Division of Water and Sewer:
  - 2 single-axle dump trucks with snow plows and salt spreaders
- Harford Community College:
  - 1 snow plow
  - 1 salt spreader

Since FY 2017, the County has progressively adopted advanced winter maintenance technologies, beginning with salt brine applicators and followed by pre-wetting systems in FY 2022 and FY 2023. Expansion of this equipment will continue as budgetary resources allow.

5.3.2 Hired Equipment Contract for Snow Removal Services

At present, the DPW Division of Highways snow removal operations rely solely on internal resources, with no contractor assistance. The Department of Parks & Recreation is responsible for snow and ice management at 74 County owned properties, including Sheriff's Offices, public libraries, recreation centers and other government buildings. Snow and ice removal for the Department of Parks & Recreation is conducted by contractors under the supervision of the Department's Maintenance Division.

Harford County DPW Bureau of Solid Waste Services has an intergovernmental agreement with Maryland Environmental Service for solid waste management services at the Harford Waste Disposal Center and the Tollgate Yard Trim Acceptance Facility. As part of the agreement, Maryland Environmental Service is responsible for maintaining landfill roads, including snow removal.

Contractors are retained by the DPW Division of Water and Sewer exclusively for emergency situations and only on an as-needed basis. At Harford Community College, snow and ice removal and control operations are conducted by College Facilities Maintenance personnel in coordination with contracted service providers. For Harford County Public School properties, all snow and ice management activities are performed exclusively by Board of Education staff.

6. Training Initiatives

Training is a critical component of effective salt management and is recognized as a BMP in winter operations. The County will provide annual training on salt management for maintenance managers, frontline personnel, and contractors. These sessions will emphasize BMPs that

promote the use of the minimum amount of material necessary to maintain safe and passable roadways and walkways.

Each year, Division of Highways employees participate in equipment configuration training, followed by snow plow simulator sessions in September. At present, 32 operators are trained annually on the simulator; however, the County is evaluating strategies to expand simulator training capacity. To further support preparedness, dry runs are scheduled every October. New hires receive onboarding instruction and are assigned to work alongside experienced operators during their initial storm shifts for firsthand guidance. The County will conduct training sessions focused on smart salting practices, the environmental and infrastructural impacts of oversalting, and BMPs to ensure these principles are consistently applied.

7. Winter Storm Management

Winter storm management involves effective planning, execution, and review.

7.1 Weather and Pavement Condition Forecast

Accurate weather and pavement condition forecasting are a key component of effective winter storm management. This is essential during all phases of a storm event – from 24 to 72 hours in advance for planning, during the storm as conditions evolve, and post-storm to guide cleanup operations and prevent safety hazards.

Harford County relies on data and reports obtained from multiple weather stations, Weather Sentry, and the National Weather Service, throughout each stage of winter storm management.

7.2 Pre-Storm Planning

Effective resource planning prior to winter storms directly contributes to improved performance during storm events. Harford County typically begins planning for standard winter storms 18 to 24 hours in advance, while preparations for major storms may begin as early as 72 hours prior to the event.

County personnel will report to their maintenance facilities with sufficient lead time to inspect equipment and perform any necessary minor repairs. All units are inspected and must be fully operational before deployment. Any required maintenance will be completed prior to the start of the winter season or immediately following storm event.

Operators will load salt and other ice control materials in accordance with environmental guidelines outlined in each facility's Stormwater Pollution Prevention Plan (SWPPP) or Good Housekeeping Plan (GHP).

The County conducts pre-storm communications with facility personnel to:

- Share the latest weather and road condition forecasts,
- Emphasize the importance of effective plowing and sensible salting,

- Review appropriate salt application rates,
- Recommend the use of additives such as salt brine,
- Facilitate discussion and identify opportunities for operational improvement.

7.3 Anti-Icing Operations

Anti-icing is a proven, proactive winter maintenance strategy practiced nationwide and will be implemented whenever conditions are appropriate. Harford County has conducted anti-icing operations since FY 2017 and has significantly expanded its use in recent winters. The County pretreats roadways with brine if the conditions are ideal to apply it.

However, anti-icing is not performed for every forecasted event. It is not conducted when:

- A storm is expected to begin as rain, which would wash away the brine and waste materials.
- Pavement temperatures are forecasted to be 15°F (-9.4°C) or lower, reducing the effectiveness of brine.
- Residual salt from a recent storm is still present on the roadway, making additional anti-icing unnecessary.

The following decision flow chart can be used to determine whether brine should be applied prior to a winter event:

Brine Application Decision Chart

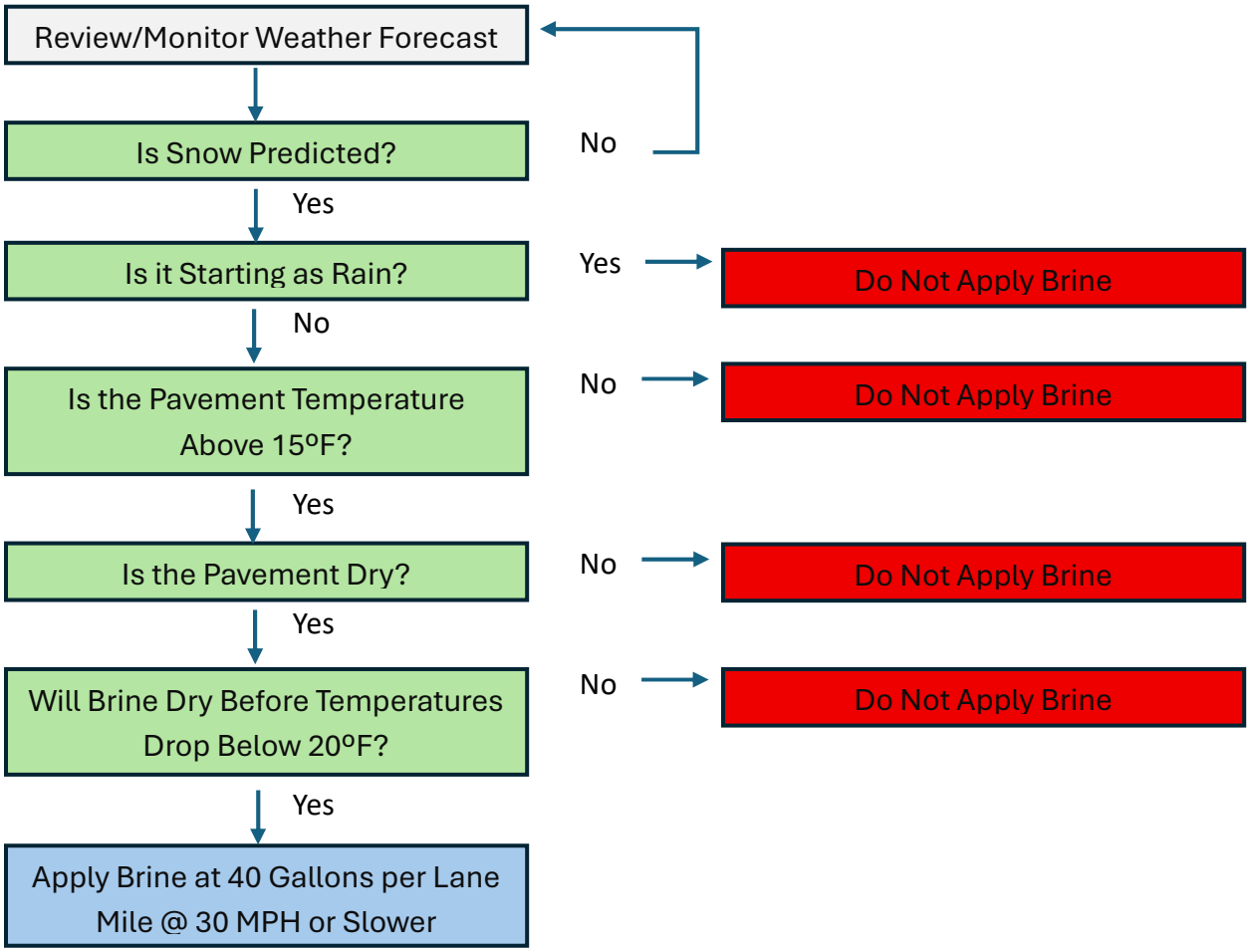

7.4 Winter Storm Operations

Once a storm begins and precipitation starts to accumulate on road surfaces, Harford County initiates snow removal operations. If the storm begins with light snowfall, a light application of pre-wetted granular salt or salt brine may be used. Operators may perform extra passes on their assigned routes during moderate to heavy snowfall to maintain safe road conditions.

Pre-wetted salt and brine adhere better to pavement surfaces, reducing material loss from bounce and scatter. Additionally, pre-wetted salt dissolves more quickly, increasing its effectiveness in melting snow and ice.

The key to effective deicing is timing: materials should be applied early enough to prevent snow and ice from bonding to the pavement, but not so early that traffic displaces the material onto shoulders. Proper timing allows for more efficient plowing and reduces the need for heavy salt applications later in the storm.

Ice control materials should be applied near the crown of the road, allowing brine to flow downhill and coat the entire surface. Salt spinner speeds will be set low enough to keep material on the roadway and prevent waste into ditches or roadsides.

As the initial application loses effectiveness and snow accumulation increases, plowing operations begin. If the initial treatment was successful, snow removal will be easier and more efficient. After plowing, operators will reapply just enough material to prevent further bonding of snow to the pavement. This cycle may need to be repeated throughout the storm to maintain safe driving conditions.

The LOS provided during a storm can vary based on several factors:

- Time of day: Overnight storms may allow for some accumulation without compaction, requiring less salt.
- Traffic volume: Storms during rush hour can lead to snow compaction, requiring more aggressive treatment.
- Storm severity and type: Heavier or longer-duration storms may require more frequent applications.

Pre-treatment before rush hour is especially important. If ice control materials are not applied in time, traffic can compact snow, making it harder to remove and increasing the need for salt. Early treatment helps reduce overall salt usage and improves roadway safety.

7.5 Severe Winter Storms

Severe winter storms present unique challenges for the County's SMP. The County must be prepared to escalate its response throughout the event – from pre-planning through final cleanup. County personnel play a critical role in maintaining passable roadways, especially for emergency services, while managing heavy snow, freezing rain, or blizzard conditions.

During storms with heavy snow accumulation, the County prioritizes continuous plowing operations while limiting salt applications. A light application of pre-wetted salt or brine may be used to prevent snow from bonding to the pavement, but the focus will remain on keeping roads clear through plowing. Once the storm subsides and most snow has been removed, a final salt application can help eliminate residual frozen precipitation. As always, salt use should be efficient and targeted.

In the event of an ice storm, the County pre-treats roadways with brine and re-applies it as needed to prevent ice bonding. Trucks are strategically positioned throughout the road network to ensure rapid response to problem areas. Aggregates such as sand may be used to enhance

roadway traction during winter storms. When mixed with salt, aggregates help reduce overall salt usage while maintaining safe driving conditions. However, if a salt-aggregate mixture is applied, cleanup may be required after the storm ends and road surfaces dry to remove residual materials from the roadway.

Rush hour storms pose additional challenges. If salt is not applied before traffic builds, snow can become compacted, making it more difficult to remove and requiring heavier salting. Pre-treatment before peak traffic periods is essential to minimize salt use and maintain road safety.

Blizzards and back-to-back storms demand more intensive plowing, which can strain plow cycle times. To prevent snow and ice from bonding between cycles, salt should be applied during each pass to keep snow in a plowable state.

Above all, the safety of County employees is the top priority. Maintaining adequate staffing levels and ensuring that operators and repair technicians receive sufficient rest is critical to the success of the SMP. A well-rested workforce is essential for sustained, effective storm response.

7.6 Stockpiling and Disposal of Removed Snow

Currently, Harford County does not stockpile snow at any location during severe storm events.

7.7 Operations in Sensitive Areas

Winter maintenance operations may occur in areas that are environmentally sensitive to salt and salt runoff. Harford County will coordinate with MDE to establish clear criteria for identifying and managing these areas.

While MDE and SHA recognize the importance of all Maryland waters, the following areas have been identified as highly susceptible to salt exposure:

- Wetlands of Special State Concern as defined in COMAR 26.23.06,
- Tier II waters as defined in MDE's Total Maximum Daily Load (TMDL) Integrated 303D Reports,
- Use III, non-tidal cold-water streams or Use III-P, non-tidal cold-water streams – public water use,
- Wellhead Protection Program as defined by MDE's program.

In addition to these designated areas, roadside or receiving waters that show signs of salt contamination should be monitored. Salt management practices in these areas will be reviewed and adjusted as needed to reduce environmental impact.

The County will develop site-specific plans for operations in sensitive areas. These plans may include:

- Reducing or eliminating salt usage,
- Applying alternative snow and ice control materials,
- Adjusting plowing strategies,

- Increasing post-storm street sweeping activities.

Sensitive areas will also be considered when identifying winter storm treatment routes. These routes will be clearly communicated to all personnel involved in salting operations and, where appropriate, to the public.

Finally, the County will explore and test new strategies and technologies in these areas to improve service levels while minimizing environmental impact.

7.8 Automatic Vehicle Location (AVL)

A critical component of effective winter storm management is maintaining real-time awareness of snow-fighting equipment locations. Many agencies across the country have implemented AVL systems to support this effort. All Harford County snow removal vehicles are equipped with AVL systems.

AVL systems track the real-time location of dump trucks and other snow-fighting equipment during winter events. This information is displayed on monitors, allowing managers to:

- Monitor operational progress across the road network,
- Quickly locate and dispatch the nearest available vehicle to respond to roadway incidents or emergencies,
- Improve response time and coordination during severe weather.

In addition to location tracking, AVL systems can monitor material application rates, including the speed and rate at which salt is being spread, and roads are being plowed. This data can be analyzed post-storm to:

- Identify operational inefficiencies,
- Optimize future storm responses,
- Support training and performance evaluation.

Most importantly, AVL technology enhances driver safety by enabling better oversight, reducing unnecessary exposure to hazardous conditions, and ensuring timely support when needed.

8. Post Storm Operations

Post storm operations encompass a range of critical activities, including equipment cleaning, stockpile management, and operational assessments.

8.1 Equipment Cleaning and Maintenance

The County washes and cleans all vehicles and equipment after every storm. Vehicles and equipment are washed and cleaned via a drive-through wash bay. The wash bay wastewater is discharged to the sanitary system for treatment.

County maintenance facilities that perform vehicle maintenance are subject to the MDE General Permit for Discharges from Stormwater Associated with Industrial Activities (Discharge Permit No. 20-SW). These facilities are required to develop and implement a site-specific SWPPP. While each SWPPP is tailored to the individual site, all plans include consistent protocols, inspections, documentation, and reporting requirements related to potential pollution sources such as equipment cleaning and maintenance operations.

Facilities not covered under Discharge Permit No. 20-SW will implement a Good Housekeeping Plan in place of a SWPPP. These plans ensure that all maintenance activities are conducted in compliance with environmental regulations and best management practices.

Winter vehicle and equipment maintenance records are tracked in the County's work order system.

8.2 Material Cleanup at Storage Facilities

Immediately following the conclusion of winter storm operations, all unused salt will be returned to an approved salt storage facility. Any exposed materials will either be moved into a covered structure or securely covered with a tarp to prevent runoff and environmental contamination.

If salt or abrasive materials were mixed in an uncovered area, any remaining stockpile will be promptly returned to the designated storage facility.

All handling and storage procedures will follow the facility's site-specific:

- Spill Prevention, Control, and Countermeasure Plan (SPCCP),
- Stormwater Pollution Prevention Plan (SWPPP),
- If neither applies, the Good Housekeeping Plan (GHP), particularly BMP Fact Sheet GH-10: Deicing Materials.

These protocols ensure compliance with environmental regulations and help prevent contamination of stormwater systems.

8.3 Operations Review for Continual Improvement

Reviewing operations after winter events is a key best management practice for both winter and salt management. Harford County will conduct these reviews at the end of each winter season. These reviews will focus on three key elements:

- What worked well,
- What did not work well,
- Opportunities for improvement.

The third element – opportunities for improvement – is essentially important, as it leads to the development and refinement of best practices.

8.4 Post Storm Data Analysis

Responsible agencies maintain comprehensive and up-to-date records of their winter operations, with a particular focus on salt usage. Key data points that will be captured include:

- Salt usage by truck,
- Salt usage by district,
- Salt usage county wide.

Salt usage is typically measured in relation to both the number of lane miles served and the amount of snowfall encountered. A key performance metric is pounds of salt used per lane mile per inch of snow.

This metric enables the County to assess and compare performance between trucks operating on the same route, across different routes and facilities, and over time, to identify trends and opportunities for improvement.

As the County continues to implement its SMP, this data will support the development of seasonal analyses and help identify long-term trends in salt usage and operational efficiency.

All collected data will be included in the County's Annual Report submitted to the MDE as part of its NPDES MS4 Permit compliance.

9. Spill Prevention and Control Plan for Winter Operations

Agencies should prioritize preventing the uncontrolled release of winter materials into the environment, particularly at storage facilities and along roadways. To address this, Harford County has developed and implemented site-specific SWPPPs or GHPs for each of its maintenance facilities. These plans identify sources of stormwater pollution and outline strategies to mitigate them. While tailored to individual sites, all plans share a consistent approach to managing winter material spills.

9.1 Salt Spill Prevention

To prevent salt spillage, trucks will never be overloaded at storage facilities. Overloading can cause salt to spill from the sides or rear of the truck, both at the facility and while in route. This practice not only wastes material but also violates established best practices for salt management.

In the event of spillage, cleanup will occur during the storm if conditions allow, or immediately after the event concludes. Prompt recovery helps minimize environmental impact and material loss.

A simple yet effective best practice is the use of high shields on the sides of the spreader boxes. The use of high shields prevents the loss of salt from the spreader box during times of travel and operation.

Salt spills can also occur even when the trucks are not overloaded. For example, if the auger in a salt spreader becomes jammed, the operator may need to manually clear it, which can result in salt falling onto the pavement. Additionally, when salt levels in the truck bed are low, operators may raise the bed to shift material toward the rear, which can also lead to spillage.

Regardless of the cause, any spilled salt will be promptly swept up and returned to the truck bed. Operators will perform this task safely, ensuring they do not endanger themselves or nearby motorists. Effective salt management will always be balanced with safety.

9.2 Brine Mixing and Storage Tanks

To minimize the risk of leaks and spills from liquid storage tanks, each facility will incorporate regular inspections into their routine environmental walkarounds. As part of this effort, the County currently conducts monthly inspections of its salt brine tanks. To prevent accidental releases, all tanks are equipped with appropriate secondary containment systems. For salt brine tanks, this is achieved through double-walled construction.

If drips or leaks are detected, maintenance or repairs will be carried out immediately. In cases where immediate repair is not possible and the leak is located outside the secondary containment; temporary containment measures must be put in place to prevent environmental contamination.

10. Recordkeeping and Annual Reports

Throughout the year, Harford County collects data to facilitate analysis of salt usage. Findings from this analysis are presented informally at the end of season annual meeting and are used to:

- Identify lessons learned and opportunities for improvement,
- Highlight operational trends,
- Recommend adjustments for future winter operations,
- Inform senior management on potential changes to policies, procedures, and expenditures,
- Assess budgetary implications based on operational data.

The data and information serve as a critical tool for continuous improvement and strategic planning. This information will also be included in the MS4 annual report.

The County continues to explore new technologies to enhance data collection and analysis capabilities.

11. Annual Winter Wrap-Up Meeting

Harford County conducts an annual review of winter operations. The review highlights opportunities for improvement in areas such as salt usage, equipment performance, and overall operational efficiency.

12. Public Education and Outreach

Agencies should make every effort to keep the public informed about their winter operations and storm response activities. Transparent communication helps manage expectations and encourages community cooperation during snow events.

Harford County provides several online resources to support this effort:

- Snow Removal FAQs: This page answers common questions about snow removal procedures. (https://www.harfordcountymd.gov/faq.aspx?TID=40)
- Snow Events Page: This resource outlines snowplow priorities for county roads, explains requirements during a snow emergency plan, and offers helpful tips for residents to support efficient snow removal. (https://www.harfordcountymd.gov/1165/Snow-Events)
- Snow Plow Tracker: Activated during snowstorms of six inches or more, this tool allows residents and travelers to monitor plowing progress in near real-time. The tracker updates every 15 minutes during active use. (https://www.harfordcountymd.gov/1821/Snow-Plow-Tracker)

These tools enhance public awareness and engagement, and they reflect the County's commitment to responsive and transparent winter operations.

The County will develop a practical salt use guide for residents and businesses. This guide will highlight the environmental impacts of salt, offer tips for responsible application, and present effective alternatives to traditional sodium chloride.

13. Testing and Evaluation of New Materials, Equipment, and Strategies for Continual Improvement

Harford County is dedicated to continuously enhancing the efficiency and effectiveness of its winter operations. A key focus of this commitment is improving salt management practices while maintaining high operational standards.

To achieve this, the County actively explores and tests innovative approaches, including:

- Experimenting with alternative and advanced winter materials,

- Updating and refining standard operating procedures (SOPs),
- Deploying new plow spreaders and other advanced equipment,
- Adopting modern strategies for storm response and resource allocation.

The County is equipping all new Highway Maintenance dump trucks with pre-wet systems to reduce the amount of salt applied to roadways. County staff collaborate with other agencies and attend the National Snow Conference to exchange best practices, explore new technologies, and stay informed about relevant advancements. These efforts reflect the County's proactive approach to innovation and its ongoing pursuit of operational excellence in winter maintenance.

14. Summary

Harford County views these Best Practices for Salt Management as a strategic framework to ensure public safety while minimizing environmental impact during winter weather operations.

This Salt Management Plan is intended to be a living document – regularly reviewed and updated to reflect evolving best practices, new technologies, and operational insights. These practices are essential tools for delivering safe, efficient, and environmentally responsible winter services to the residents and travelers of Harford County.

15. Appendix A: Salt Management Plan Overview

This section outlines the County's current and planned practices for effective road salt management in support of winter maintenance operations. The content is organized into the following key areas:

- Winter Maintenance Policies
- Trends and Data Analysis
- Material Ordering and Delivery
- Material Storage and Handling
- Material Record Keeping
- Equipment Upgrading
- Equipment Calibration
- Equipment Washing
- Snow and Ice Control Training
- Environmentally Sensitive Areas
- Technology Review
- Public Outreach and Education

While not meant to be a comprehensive consideration of every possible best management practice, this section highlights existing strategies and identifies feasible improvements based on current operational and budgetary conditions.

15.1 Winter Maintenance Policies

General:	• The County intends to review winter maintenance program policies annually to assess whether updates to the defined levels of service are necessary or appropriate.
Goal/Timetable:	• Winter maintenance policies will be reviewed annually and updated as needed.
Responsibility:	• DPW Highways Division and Department of Parks & Recreation
Environmental Impacts:	• Winter maintenance policies form the foundation for program delivery and can have a significant impact on the environment.
Performance Measure:	• Approved winter maintenance policy.

15.2 Trends and Data Analysis

General:	• The County aims to monitor and evaluate winter severity in relation to salt usage to better understand operational demands. • Through trend analysis and the implementation of a responsible salt management strategy, long-term goals can be developed to reduce salt usage while ensuring roadway safety and mobility.
Goal/Timetable:	• During the 2024-2025 winter season, the County began tracking salt usage relative to both the number of lane miles served and the total inches of snowfall received.
Responsibility:	• DPW Highways Division and Watershed Protection & Restoration Office
Environmental Impacts:	• Effective salt management requires an accurate accounting of salt usage in relation to storm severity to identify trends and set goals.
Performance Measure:	• Pounds of salt used per lane mile per inch of snow.

15.3 Materials Ordering and Delivery

General:	• The County is dedicated to following best practices for ordering and distributing deicing materials. Salt is typically delivered in the fall and replenished as needed throughout the winter season. To ensure quality and prevent exposure to the elements, all materials are stored in covered facilities such as domes or barns.
	• To minimize environmental salt loss, the following procedures are implemented annually during material ordering and delivery:
	  ○ Ensure salt deliveries are covered with a waterproof tarpaulin during wet weather conditions.
	  ○ Keep loading pads clean and free of excess material to prevent runoff and contamination.

Goal/Timetable:	• All deliveries are to be accompanied by a weigh ticket and the following information recorded:
	  ○ Weight ticket with truck number and net weight
	  ○ Weather conditions
	  ○ Tarping completed, if required
	  ○ Loading pad cleaning following transfer
	• The initial stockpiling will be completed prior to May 1st of each year.

Responsibility:	• DPW Highways Division and Department of Parks & Recreation
Environmental Impacts:	• Poor housekeeping during the delivery and handling of salt can lead to increased environmental loss through runoff or spillage. Additionally, if deicing materials absorb excessive moisture, they may become clumped or unusable, compromising their effectiveness during winter operations.
Performance Measure:	• Percentage of deliveries delivered in good weather or tarped in bad weather. • Percentage of material put into storage within 24 hours. • Loading pad is left in a clean state following transfer of material indoors. • Compliance of good housekeeping practices through periodic yard inspection.

15.4 Material Storage and Handling

General:	• The County is committed to maintaining best practices for the storage and handling of winter maintenance materials to ensure operational efficiency and environmental protection. • Currently, salt is stored in seven (7) covered salt domes located across five (5) Highway Maintenance Facilities. • A paved loading pad is used for loading spreader trucks; however, there is currently no covered area designated for loading or unloading materials. • Each year, the salt domes undergo inspection as part of the County's annual Stormwater Pollution Prevention Plan (SWPPP) comprehensive site inspection. These inspections are conducted to identify and address any deficiencies that could pose environmental risks.
Goal/Timetable:	• To ensure effective and environmentally responsible handling of salt and deicing liquids, the following measures will be implemented each year: ○ When loading spreaders outside the storage structure, operations will occur on an impervious loading pad. Any spilled material will be promptly collected and returned to the storage structure. ○ Spreaders will not be loaded beyond their rated capacity to prevent spillage during transport and application. ○ Do not load frozen blocks of material into spreaders. Instead, move them to a designated corner within the storage structure to thaw and dry before reintroducing them to the stockpile. ○ Document all inspections and repairs of the storage structure to maintain integrity and compliance.
Responsibility:	• DPW Highways Division and Department of Parks & Recreation
Environmental Impacts:	• Improper housekeeping practices in the storage and handling of salt can significantly increase the risk of environmental contamination through runoff, spillage, or material degradation.
Performance Measure:	• Compliance through monthly inspection.

15.5 Material Record Keeping

General:	• The County aims to maintain accurate records of deicing material usage by route, vehicle, and storm event to support accountability and operational efficiency. • Currently, material usage is tracked by the amount of salt loaded out of the salt domes. The amount of salt used during winter operations is also tracked by the AVL system.
Goal/Timetable:	• By providing an accurate record of material usage by district and vehicle and by storm, the County will be able to fine tune the amount of material to be spread for varying climatic and pavement conditions. The immediate goal will be to compare usage with benchmarked routes and to rationalize the amount of material ordered with the residual inventory.
Responsibility:	• DPW Highways Division, Department of Parks & Recreation and Watershed Protection & Restoration Office
Environmental Impacts:	• Effective salt management requires an accurate accounting of salt usage by vehicle, route, and storm.
Performance Measure:	• Record of material usage by vehicle, route, and storm together with a year-end material reconciliation.

15.6 Equipment Upgrading

General:	• The County aims to ensure that its winter maintenance fleet can deliver appropriate amounts of deicing materials under a wide range of climatic conditions. • Currently, all County-owned snow management vehicles are equipped with AVL systems. • The County currently utilizes 49 pickup trucks equipped with salt spreaders and snow plows, 47 single-axle dump trucks equipped with salt spreaders and snow plows, 14 single-axle dump trucks equipped with brine pre-wet application systems and snow plows, 6 tri-axle dump trucks equipped with brine pre-wet application systems and snow plows, 5 graders equipped with V snow plows and 4 brine pretreatment applicator inserts.
Goal/Timetable:	• As the spreader fleet comes up for replacement within the vehicle replacement program, pre-wet capabilities are to be added.
Responsibility:	• DPW Highways Division and Department of Parks & Recreation
Environmental Impacts:	• Equipment upgrades will improve the capability of placing the right amount of deicing materials in the right place at the right time and allow for an increased level of data collection which, in turn, leads to more effective use of salt.
Performance Measure:	• Percentage of equipment equipped with electronic spreader controls and pre-wet capability.

15.7 Equipment Calibration

General:	• Properly calibrated equipment is essential for the effective and efficient application of deicing materials on County roadways. Accurate calibration ensures that the right amount of material is applied, reducing waste and minimizing environmental impact. • Currently, snow management equipment is calibrated annually and recalibrated after every event.
Goal/Timetable:	• The practice of calibrating the spreaders prior to the winter season has already been implemented. Also, during the winter season, the spreader units are recalibrated after every storm event.
Responsibility:	• DPW Highways Division
Environmental Impacts:	• Proper equipment calibration and maintenance will ensure that the proper volume of deicing salts can be spread onto the highway.

Performance Measure:	• Spreader calibration by November 1 of each year.
	• Spreader recalibration after each event.
	• Comparisons to be developed over the winter season:
	  ○ Amount of material spread rates across vehicles and across districts.
	  ○ Effectiveness of each vehicle unit.
	  ○ Actual speed ratio performance against industry speed rates.

15.8 Equipment Washing

General:	• The County is committed to reducing the discharge of chlorides, oil, grease, and grit into the environment through improved equipment maintenance and washing practices. • Currently, winter maintenance equipment is washed at an indoor location. The wastewater produced from the washing operations is discharged into the sanitary system.
Goal/Timetable:	• The practice of washing all equipment indoors will minimize discharges into the environment.
Responsibility:	• DPW Highways Division and Department of Parks & Recreation
Environmental Impacts:	• Vehicle wash water contains salts, oil, grease and dirt and can have an adverse effect on the environment if allowed to be discharged into the environment.
Performance Measure:	• Percentage of vehicles washed indoors before being placed in readiness for the next shift.

15.9 Snow and Ice Control Training

General:	• The County is committed to ensuring that all personnel involved in snow and ice control, as well as salt management, receive adequate and up-to-date training.
Goal/Timetable:	• To ensure that all staff are trained and their training is refreshed annually in snow and ice control including salt management practices.
Responsibility:	• DPW Highways Division and Watershed Protection & Restoration Office
Environmental Impacts:	• A solid understanding of best practices in housekeeping and snow and ice control measures enhances the effectiveness of the plan and reduces the potential for environmental harm.
Performance Measure:	• Percentage of staff receiving snow and ice control training.

15.10 Environmentally Sensitive Areas

General:	• The County aims to assess the environmental impacts of winter maintenance practices on sensitive areas. • To date, no data has been available regarding how these activities affect the County's environmentally sensitive areas.

Goal/Timetable:	• Current Permit Term
	  ○ Watershed Protection and Restoration (WPR) staff, in collaboration with DPW Highways Division and Department of Parks & Recreation staff, will coordinate with the MDE to establish criteria for identifying areas sensitive to salt exposure and runoff.
	  ○ Environmentally sensitive areas within the County will be identified and ranked. For the most vulnerable areas, a sampling program will be developed to evaluate the impacts of winter maintenance practices conducted by the County.
	• Next Permit Term
	  ○ A monitoring program will be initiated to track changes in environmentally sensitive areas over time, creating a historical record of the effects of winter maintenance activities.
	  ○ Where feasible, an appropriate action plan will be developed and implemented to mitigate identified impacts.

Responsibility:	• DPW Highways Division, Department of Parks & Recreation and Watershed Protection & Restoration Office
Environmental Impacts:	• Environmentally sensitive areas affected by winter maintenance practices may require tailored solutions and targeted action plans to effectively mitigate adverse impacts.
Performance Measure:	• Identification and ranking of environmentally sensitive areas monitoring test results against current practices and mitigation measures.

15.11 Technology Review

General:	• Existing and emerging technologies will be continuously evaluated for their potential to improve or modify current winter maintenance practices.
Goal/Timetable:	• Each year, new technologies and proven alternative methods for managing winter storms will be reviewed. Where appropriate, pilot studies will be recommended to test and evaluate winter maintenance methodologies.
Responsibility:	• DPW Highways Division and Department of Parks & Recreation
Environmental Impacts:	• Emerging techniques, procedures, and technologies may offer more effective ways to monitor and reduce the amount of salt entering the environment.
Performance Measure:	• Annual report on new developments in snow and ice control.

15.12 Public Outreach and Education

General:	• The County intends to develop a comprehensive communication strategy to inform both County staff and the public about the winter maintenance program.
Goal/Timetable:	• Snow Removal FAQs, a page containing answers to common questions regarding snow removal procedures has been published to the County's website. • The Snow Events Page is a resource that outlines snowplow priorities for county roads, explains requirements during a snow emergency plan, and offers helpful tips for residents to support efficient snow removal. This resource has been published on the County's website. • Snow Plow Tracker is a tool published on the County's website that allows residents and travelers to monitor plowing progress in near real-time. The tool is activated during snowstorms of six inches or more and updates every 15 minutes during active use. • The County will develop a practical salt use guide for residents and businesses.
Responsibility:	• DPW Highways Division, Department of Parks & Recreation and Watershed Protection & Restoration Office
Environmental Impacts:	• Increasing awareness of the role and management of snow and ice control in winter maintenance operations will help residents and staff better understand the challenges involved in responding to winter storms.
Performance Measure:	• Maintain up-to-date information on winter maintenance operations on the Department's website, including service updates, safety tips, and educational resources. Development of a practical salt use guide for residents and businesses.

16. Appendix B: Salt Management Plan Goals

The Salt Management Plan outlines both short-term and long-term goals, along with proposed timelines for implementation by the County. Pending approval from the Administration, these plan elements will be incorporated into the capital and operating budgets. Below is a summary of the key goals:

16.1 Short-Term Goals

16.1.1 Winter Maintenance Policies

The County has established service and maintenance standards that have been accepted by the community. These policies serve as the foundation for program delivery and play a critical role in minimizing environmental impacts. The current objective is to review all departmental standards related to winter maintenance and to seek formal endorsement of the proposed service levels and maintenance policies.

16.1.2 Winter Maintenance Training

A solid understanding of good housekeeping practices, snow and ice control strategies, and program delivery expectations are critical to the success of the Salt Management Plan. To support this, all staff involved in winter operations will receive comprehensive winter maintenance and operations training.

16.2 Long-Term Goals

16.2.1 Equipment Upgrading

The winter maintenance fleet should be capable of delivering precise amounts of deicing materials under a wide range of weather conditions. The most cost-effective approach to upgrading the fleet is to implement enhancements as vehicles are scheduled for replacement. As part of the County's heavy equipment replacement program, new spreader trucks will be equipped with electronic controllers and pre-wet systems.

These upgrades will enhance the fleet's ability to apply the right amount of material in the right place at the right time. They will also support improved data collection, enabling more efficient salt usage and better-informed operational decisions.

16.2.2 Environmentally Sensitive Areas

Elevated chloride concentrations from winter maintenance activities can negatively impact the environment. The Statewide Salt Management Plan recommends assessing these impacts through a structured monitoring program. As a first step, environmentally sensitive areas will be identified and ranked, beginning with the most vulnerable. Where appropriate, targeted monitoring programs can then be implemented to evaluate the effects of the County's winter maintenance practices. Over time, and based on monitoring results, action plans will be developed to mitigate chloride impacts and protect environmental health.

17. Appendix C: Areas and Waterways Environmentally Sensitive to Salt

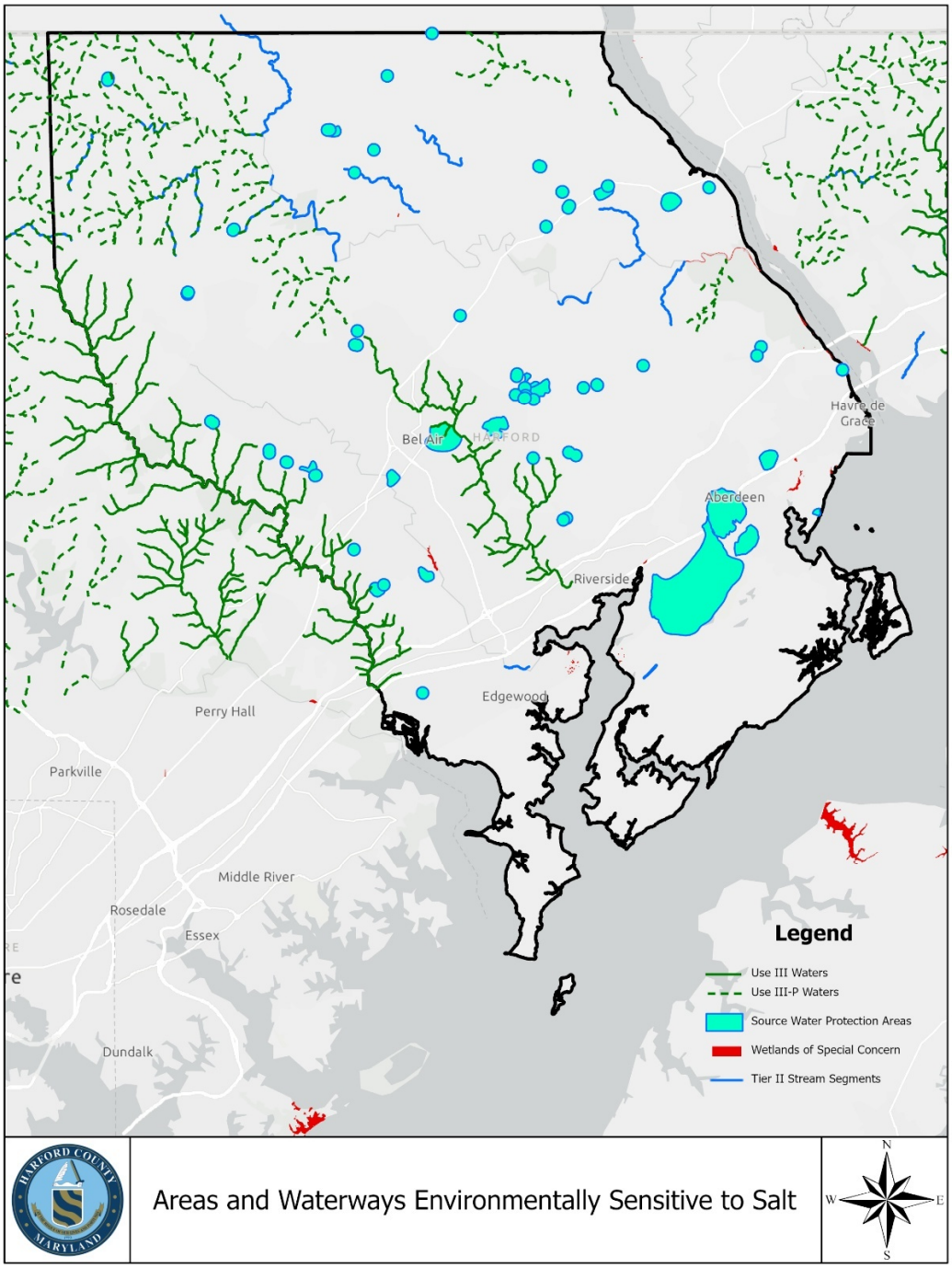

Litter and Floatables

Waste reduction is the preferred method in the solid waste management hierarchy. Reductions in waste generation lessen the burden of solid waste management by decreasing the amount of material entering the system. The waste reduction plan reflects a multi-faceted approach.

The curbside collection of waste and recyclables is available to residents and services are provided by local trash collection companies. Residents who do not subscribe to a curbside collection service may drop-off material at the HWDC. A 2014 phone survey indicated about 85 percent of all residents recycle with about 80 percent subscribing to a curbside collection program and about four percent self-hauling to the HWDC.

Media Outlets

The County has consistently spent considerable resources targeting County residents with various forms of advertisement through local radio, newspapers, magazines, and website ads. In addition, the Office of Recycling maintains a website, www.Harfordrecycles.org which includes in-depth information on the importance of waste reduction and information regarding all the recycling programs available for County residents. The website is updated frequently to highlight seasonal programs and events such as Christmas tree recycling and grass cycling. The Harford County Reuse Guide is maintained on this website as well as a list of frequently asked questions. Brochures are available for Harford County residents both on the website and in print. Topics include grass cycling, single stream recycling, business recycling, textile and electronics recycling, used motor oil and antifreeze recycling, general recycling available at the HWDC, and mulch and compost information.

Social media has become a critical tool for outreach and education. The Office of Recycling maintains an active Facebook page https://www.facebook.com/HarfordCountyRecycling which encourages communication and engagement with residents and businesses concerning waste reduction and recycling opportunities. The Facebook page allows the Office of Recycling to post educational information, address questions, and promote recycling. Contests and giveaways are employed to encourage participation and discussion on the page.

School Programs

Harford County Public Schools recognizes the importance of recycling, and as such, every fourth grade science class in the Harford County Public School system provides lessons designed to teach the importance of waste reduction and recycling. The Office of Recycling provides presentations, lessons, and activities to accompany the curriculum. This support extends to middle and high schools and school groups are also encouraged to visit the HWDC to see landfilling and recycling in action.

The Office of Recycling also supports school participation in the Maryland Association for Environmental and Outdoor Education (MAEOE) Green School Program. The Harford County Office of Recycling has been certified as a Green Leader to fully engage and assist with application completion, presentations, lessons and activities, teacher training, and coordinating/creating community partnerships for completion of outlined program objectives.

Community Programs

Community outreach is another important aspect of public education. Community groups are encouraged to contact the Office of Recycling and schedule presentations and tours of the HWDC. In addition, the Office of Recycling participates in local special events, expos, fairs, and business events to highlight recycling.

Business Program

Businesses are also encouraged to recycle through the Partners in Recycling program. This program recognizes businesses who are recycling with a display sticker, a listing on our website, and inclusion in media advertising. The Office of Recycling aids businesses looking to recycle in the form of waste assessments, educational materials, and training sessions in waste reduction and recycling. The Office of Recycling also reaches out to businesses and offers on-site visits to discuss business recycling opportunities and the result on their bottom-line. Businesses that are recycling are encouraged to apply for recognition through the annual Business Recycling Awards program. Awards are given to businesses who demonstrate a commitment to recycling and source reduction in their organization. Award winners receive a plaque during a public award ceremony and are included in an announcement through various media outlets.

Business recycling in Harford County is strictly voluntary. Unfortunately, many businesses do not recycle which is evident by significant quantities of recyclables observed entering the landfill for disposal. Whenever large quantities of recyclables are received, the County attempts to track the origin of the load and pinpoint the business that generated the recyclables. Some conversations with these business owners indicate that (1) the local trash collection companies market their services in ways that do not lessen the business owner's costs for recycling and/or (2) it is corporate policy not to recycle unless local government laws require recycling.

Parks and Recreation Programs

As part of the Harford County Land Preservation, Parks, and Recreation Plan, the Department identified recycling and other conservation practices as part of the overall strategic plan. Working in partnership with Harford County Public Schools, Parks and Recreation began a pilot program to implement single stream recycling at all public school stadiums and then expanded the program to include all school sites as part of a County-wide implementation at all Department parks and facilities. Because of the successful partnership with Harford County Public Schools,

the Department of Parks and Recreation fully implemented single stream recycling at all parks, centers, offices, sports fields, and special events. Working in cooperation with the Harford County Office of Sustainability and the Division of Environmental Services, Recycling Office, Parks and Recreation purchased 400 additional recycling containers, lids, and signage to implement the "Recycling Just Like at Home" program.

Computer and Electronic Program

The proliferation of computer and consumer electronics has resulted in continued growth in this portion of the U.S. waste stream. Electronic recyclables include computers, non-CRT computer monitors, computer peripherals, non-CRT televisions, stereophonic equipment, VCRs, DVRs, cellphones, and similar electronic products. Harford County has a contract in place with an eCycling vendor. Harford County intends to continue to offer this service to County residents and businesses in the future.

Household Hazardous Waste Program

Household hazardous waste was collected from residents at four dedicated events during this reporting period. To be accepted, all items must be in containers with quantities normally found in retail stores. Items accepted included oil-based paints and stains, solvents, herbicides, pesticides, mercury thermometers, mercury containing thermostats, fluorescent light tubes and CFLs, pool chemicals, caustic cleaners, acids, and other items that may cause harm if not safely handled or applied.

Property Management and Maintenance Training Records

Location	Number of Trainees
Harford County Highways/Parks	74
Scarboro Landfill	17
Tollgate Landfill	16
Sod Run WWTP	33
Fleet Maintenance	28

Maryland Environmental Service
Harford County Roadside Litter Control Program
Fiscal Year 2025

Date	Litter Control Tires	Litter Control Miles	Lbs. of Solid Waste Collected	Lbs. of Recyclables Collected	Adopt- A-Road Tires	Adopt- A-Road Miles	Adopt- A- Road Solid Waste Collected	Adopt- A- Road Recyclables Collected	NOA Tires Collected	NOA Recyclables Collected	NOA Solid Waste Collected
July-24	11	37.91	1533	798	0	3.9	25	10	2	0	5900
August-24	19	64.47	6560	2640	5	6.3	510	50	0	0	420
September-24	12	42.16	5351	1674	0	4.2	40	1860	0	0	0
October-24	38	24.35	4000	1950	0	6.5	200	115	1	0	1080
November-24	21	36.63	3580	1365	1	5.3	280	750	6	0	7780
December-24	16	61.64	5100	1990	0	4.5	20	20	0	0	0
January-25	25	66.88	3120	2085	0	1.0	40	0	3	0	2660
February-25	32	66.61	3530	2920	0	2.7	25	35	0	140	300
March-25	61	49.39	4110	3160	22	23.9	24	1910	0	0	200
April-25	33	60.7	7940	1860	3	13.5	1780	665	0	0	0
May-25	34	46.24	3525	2270	0	4.6	145	120	0	0	3060
June-25	1	49.11	2875	419	0	4.5	1065	70	9	0	1380
Totals	**303**	**606.09**	**51224**	**23131**	**31**	**80.9**	**4154**	**5605**	**21**	**140**	**22780**

Litter Control Miles	606.1
Adopt-A-Road Miles	80.9
Total Miles For Fiscal Year	687.0

Adopt-A-Road Signed Contracts: 94

Recyclables Collected in Lbs.	23,131
Adopt-A-Road Recyclables Collected In Lbs.	5,605
NOA Recyclables Collected in Lbs.	140
Total Recyclables Collected In Lbs.	28,876

Litter Control Tires Collected	303
Adopt-A-Road Tires Collected	31
NOA Tires Collected	21
Total Tires Collected	355

Solid Waste Collected in Lbs.	51224
Adopt-A-Road Solid Waste Collected In Lbs.	4,154
NOA Solid Waste Collected in Lbs.	22,780
Total Solid Waste Collected in Lbs.	78,158

Harford County Office of Recycling Outreach Log FY 2025				
Name	**Date**	**Number of Participants**	**Contact**	**Program Type**
MAEOE Green Leader Meeting	7.8.24	20	Mary Westerfelt	Public Outreach
Mason Dixon Country	7.11.24	62	Kelly Rose	Public Outreach
BioDevco Tour	7.12.24	35	Andrew Cassilly	Tour-HWDC
Harford County Farm Fair	7.20.24	2000	Alice Archer	Public Outreach
Harford County Farm Fair	7.21.24	2000	Alice Archer	Public Outreach
Harford County Farm Fair	7.22.24	2000	Alice Archer	Public Outreach
Harford County Farm Fair	7.23.24	2000	Alice Archer	Public Outreach
Harford County Farm Fair	7.24.24	2000	Alice Archer	Public Outreach
Harford County Farm Fair	7.25.24	2000	Alice Archer	Public Outreach
Harford County Farm Fair	7.26.24	2000	Alice Archer	Public Outreach
Harford County Farm Fair	7.27.24	2000	Alice Archer	Public Outreach
Harford Glenn Environmental Center	8.8.24	5	Howard Eakes	Public Outreach
Whiteford Library	8.19.24	100	Wendy Doring	Public Outreach
Master Gardener Monthly Meeting	9.5.24	62	Joyce Brownign	Public Outreach
Harford County Equine Roundtable	10.22.24	30	Kim Doran	Public Outreach
MAEOE Committee Meeting	10.29.24	35	Mary Westerfelt	Public Outreach
Eden Mill Fall Festival	11.2.24	1500	Ronnie Greavey	Public Outreach
Master Gardener Monthly Meeting	11.7.24	80	Joyce Browning	Public Outreach
MAEOE Committee Meeting	11.13.24	35	Mary Westerfelt	Public Outreach
America Recycles Day Event- Ag Center	11.16.24	500	Wendy Doring	Public Outreach
Mason Dixon Business Association	11.20.24	100	Wendy Doring	Public Outreach
Homeschool Presentation- Havre de Grace Library	11.22.24	50	Wendy Doring	Public Outreach
Havre de Grace Oyster Festival	11.23.24	500	Wendy Doring	Public Outreach
Churchcreek Elementary School	12.3.24	500	Kristen Neal	Public Outreach
Harford County 4-H Santa Breakfast	12.7.24	500	Wendy Doring	Public Outreach
University of Maryland MG Meeting	1.2.25	100	Isabella Mooney	Public Outreach
Dublin Elementary School Green School Prep	1.7.25	5	Diane Thompson	School Presentations
Facility Tour	1.17.25	2	Isabella Mooney	Tour- HWDC
University of Maryland MG Meeting	2.6.25	100	Isabella Mooney	Public Outreach
Agronomy Meeting- University of MD AG	2.18.25	200	Andy Kness	Public Outreach
North Bend Elementary School	2.26.25	200	Greg Lane	Public Outreach
Bel Air Middle School Ecology Club	2.27.25	75	Erin Baker	Public Outreach
NEWDA Spring Social Media Training	2.28.25	30	Diana Reigart	Public Outreach
University of Maryland MG Meeting	3.6.25	100	Isabella Mooney	Public Outreach
Havre de Grace Green Team	3.12.25	100	Danielle Green	Public Outreach
Harford County Environmental Advisory Board	3.18.25	20	Jeff Schoenberger	Public Outreach
Compost Bin and Rain Barrel Pickup	4.12.25	135	Wendy Doring	Public Outreach
Hickory Elementary School Second Grade	4.23.25	200	Angela Foye	Public Outreach
Earth Day Celebration Poplar Grove	4.26.25	800	Wendy Doring	Public Outreach
CAB Advisory Board	5.15.25	100	Wendy Doring	Public Outreach
Chesapeake Festival Havre de Grace Green Team	5.17.25	800	Wendy Doring	Public Outreach
NEWDA Trash and Recycling Legislative Review	5.21.25	20	Wendy Doring	Public Outreach
MRN Conference	6.9.25	200	Peter Houstle	Public Outreach
			Number of Events	**Number of Participants**
Public Outreach			**40**	**23,259**
School Presentations			**1**	**5**
HWDC Tour			**2**	**37**
Total			**42**	**23,301**
Number of Social Media Posts			**880**	
Advertising			**4**	

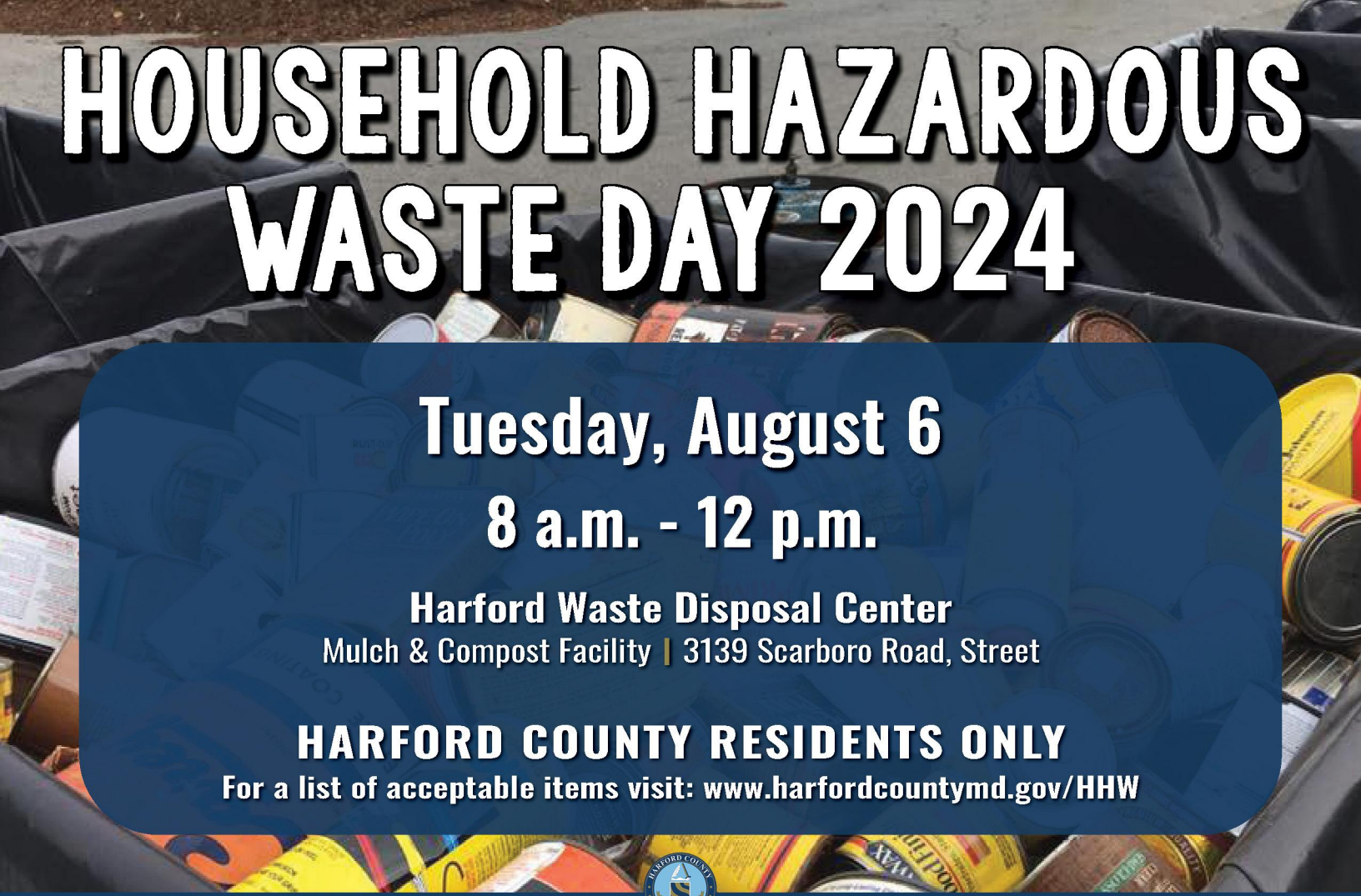

HOUSEHOLD HAZARDOUS WASTE DAY 2024

Tuesday, August 6

8 a.m. - 12 p.m.

Harford Waste Disposal Center

Mulch & Compost Facility | 3139 Scarboro Road, Street

HARFORD COUNTY RESIDENTS ONLY

For a list of acceptable items visit: www.harfordcountymd.gov/HHW

Maryland ENVIRONMENTAL SERVICE

HARFORD COUNTY

Bob Cassilly, County Executive

@HarfordCountyRecycling

410.638.3417

harfordrecycles@menv.com



HOUSEHOLD HAZARDOUS WASTE DAY 2024

Saturday, November 2

8 a.m. - 12 p.m.

Harford Waste Disposal Center

Mulch & Compost Facility | 3139 Scarboro Road, Street

HARFORD COUNTY RESIDENTS ONLY

For a list of acceptable items visit: www.harfordcountymd.gov/HHW

FREE on site document shredding available! Limit four boxes per vehicle.

Maryland ENVIRONMENTAL SERVICE

HARFORD COUNTY

Bob Cassilly, County Executive

@HarfordCountyRecycling

410.638.3417

harfordrecycles@menv.com

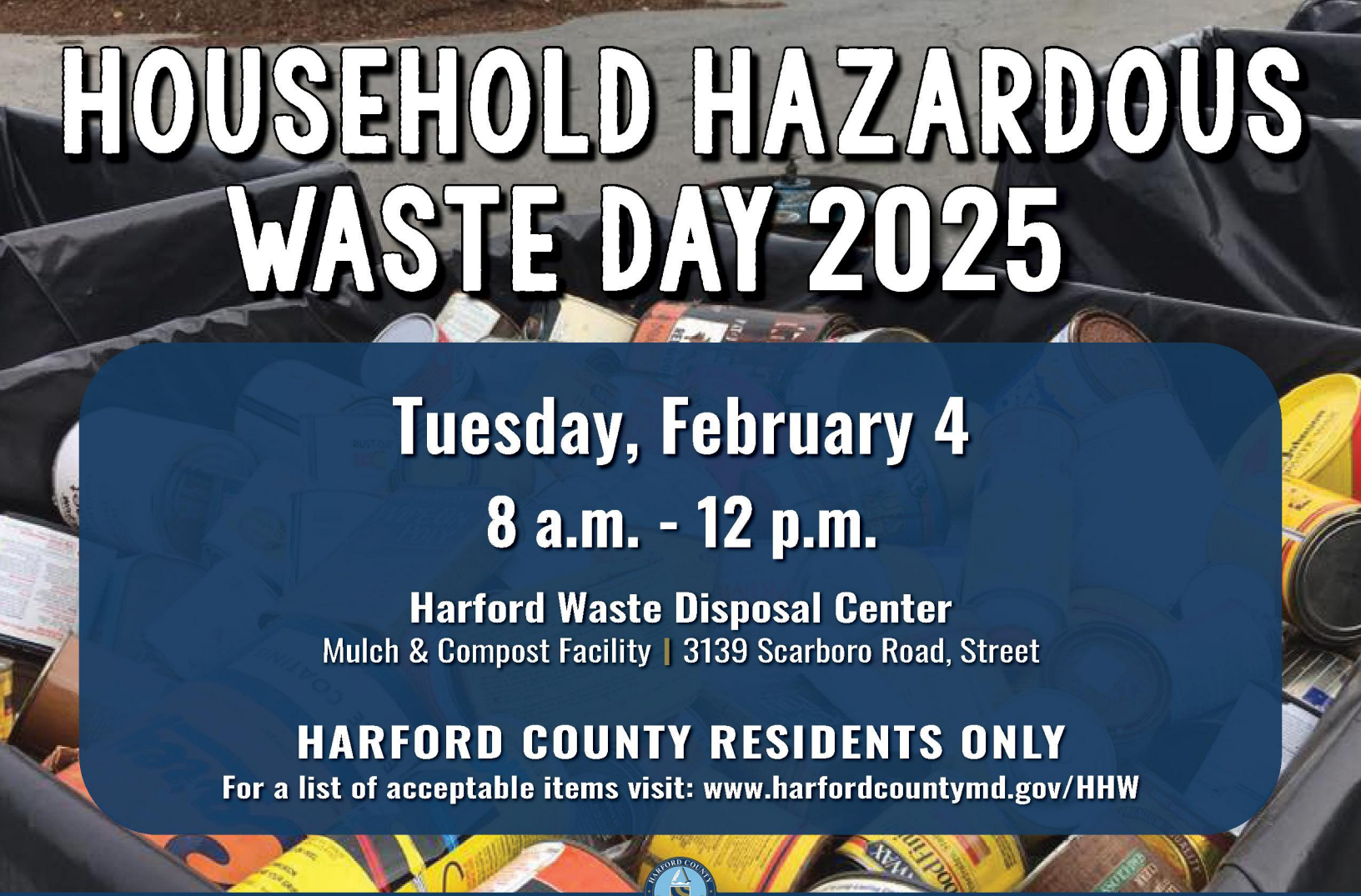

HOUSEHOLD HAZARDOUS WASTE DAY 2025

Tuesday, February 4

8 a.m. - 12 p.m.

Harford Waste Disposal Center

Mulch & Compost Facility | 3139 Scarboro Road, Street

HARFORD COUNTY RESIDENTS ONLY

For a list of acceptable items visit: www.harfordcountymd.gov/HHW

Maryland ENVIRONMENTAL SERVICE

HARFORD COUNTY

Bob Cassilly, County Executive

@HarfordCountyRecycling

410.638.3417

harfordrecycles@menv.com



HOUSEHOLD HAZARDOUS WASTE DAY 2025

Saturday, May 10

8 a.m. - 12 p.m.

Harford Waste Disposal Center

Mulch & Compost Facility | 3139 Scarboro Road, Street

HARFORD COUNTY RESIDENTS ONLY

For a list of acceptable items visit: www.harfordcountymd.gov/HHW

FREE on site document shredding available! Limit four boxes per vehicle.

Maryland ENVIRONMENTAL SERVICE

HARFORD COUNTY

Bob Cassilly, County Executive

@HarfordCountyRecycling

410.638.3417

harfordrecycles@menv.com

Harford County

Abingdon

Highway Maintenance Facility

Stormwater Pollution Prevention Plan

June 2023

Revised April 2024
Revised May 2025

Submitted by:

Harford County Government
Department of Public Works
Division of Highways and Stormwater Management

Facility Operator:
Matt McKay, District Supervisor
mbmckay@harfordcountymd.gov
(410) 612-1616 x7650

Facility Location:
3111 Philadelphia Rd
Abingdon, MD 21009

Robert G. Cassilly
Harford County Executive

Robert S. McCord
Director of Administration

Joseph J. Siemek, P.E.
Director of Public Works

Steven A. Walsh, P.E.
Deputy Director of Public Works

FOREWORD

The Harford County Department of Public Works Division of Highways and the Watershed Protection and Restoration Office have developed a Stormwater Pollution Prevention Plan, also known as the *Harford County Abingdon Highway Maintenance Facility Storm Water Pollution Prevention Plan.* This *Plan* was developed in accordance with the *General Permit For Discharges From Stormwater Associated With Industrial Activities (Discharge Permit No. 20-SW; NPDES Permit No. MDR0000)* as established by Maryland Department of the Environment, effective February 1, 2023. The *Plan* also satisfies those requirements established by the Maryland Department of the Environment's National Pollutant Discharge Elimination System (NPDES) MS4 permit.

The Division of Highways and the Watershed Protection and Restoration Office shall review the *Harford County Abingdon Highway Maintenance Facility Storm Water Pollution Prevention Plan* at a minimum of every three (3) years. Should any of the following conditions listed below occur, the personnel shall revise and reissue the *Plan* to the appropriate individuals and the Maryland Department of the Environment (MDE):

- Applicable laws are revised;
- The *Plan* fails in an emergency; or
- The facility changes in design or operation which results in an increased potential for fires, explosions, or release of hazardous waste.

All revisions to the *Harford County Abingdon Highway Maintenance Facility Storm Water Pollution Prevention Plan* shall be documented by providing the date and noting the section(s) which have been revised since its initial development.

Contents

SECTION 1: FACILITY DESCRIPTION AND CONTACT INFORMATION 4
1.1 Facility Information 4
1.2 Contact Information/Responsible Parties 5
1.3 Stormwater Pollution Prevention Team 6
1.4 Activities at the Facility 6
1.5 General Location Map 7
1.6 Site Map 8
SECTION 2: POTENTIAL POLLUTANT SOURCES 9
2.1 Industrial Activity and Associated Pollutants 9
2.2 Spills and Leaks 9
2.3 Non-Stormwater Discharges Documentation 9
2.4 Salt Storage 10
2.5 Visual Monitoring Summary 10
2.6 PFAS and PCB Source Identification 10
SECTION 3: STORMWATER CONTROL MEASURES 10
3.1 Minimize Exposure 10
3.2 Good Housekeeping 12
3.3 Maintenance 13
3.4 Spill Prevention and Response 14
3.5 Erosion and Sediment Controls 15
3.6 Management of Runoff 15
3.7 Salt Storage Piles or Piles Containing Salt 16
3.8 20-SW Sector-Specific Non-Numeric Effluent Limits 16
3.9 Employee Training 17
3.10 Non-Stormwater Discharges 18
3.11 Waste, Garbage and Floatable Debris 18
3.12 Dust Generation and Vehicle Tracking of Industrial Materials 18
SECTION 4: SCHEDULES AND PROCEDURES FOR MONITORING 19
SECTION 5: INSPECTIONS 20

SECTION 6: SWPPP CERTIFICATION 21
SECTION 7: SWPPP MODIFICATIONS 22
SWPPP ATTACHMENTS.....24

SECTION 1: FACILITY DESCRIPTION AND CONTACT INFORMATION

1.1 Facility Information

Name of Facility: Harford County Abingdon Highway Maintenance Facility
Street: 3111 Philadelphia Rd
City: Abingdon State: MD ZIP Code: 21009
County: Harford
Permit Registration Number: 20SW1271 (Previous 12SW1271)

Latitude/Longitude (Use decimal format)
Latitude: Longitude:
39.453584 º N (decimal) -76.282966º W (decimal)

Estimated area of industrial activity at site exposed to stormwater: 11.8 (acres)

Primary SIC Code or 2-letter Activity Code: 1611
(refer to Appendix A of the 20-SW)
Identify your applicable sector and subsector: Sector AD.a: Dept of Public Works and Highway Maintenance Facilities

Name and 8-digit identifier of the receiving water body: Bush River; 02130701

Are any of your discharges directly into any segment of an "impaired" water? ☒ Yes ☐ No

If Yes, identify name of the impaired water (and segment, if applicable): Bush River – 1st -4th order streams

Identify the pollutant(s) causing the impairment: PCBs

For pollutants identified, which do you have reason to believe will be present in your discharge?

None

For pollutants identified, which have a completed TMDL? PCBs

Do you discharge into a high quality receiving water designated as a Tier 2 water? ☐ Yes ☒ No

Do you discharge into a high quality receiving water designated as Use III or Use IV? ☐ Yes ☒ No

1.2 Contact Information/Responsible Parties

Facility Operator:
Name: Matt McKay
Address: 3111 Philadelphia Rd
City, State, Zip Code: Abingdon, MD 21009
Telephone Number: (410) 612-1616 x7650
Email address: mbmckay@harfordcountymd.gov
Fax number: (410) 612-1617

Facility Owner:
Name: Harford County Government
Address: 220 S Main St
City, State, Zip Code: Bel Air, MD 21014
Telephone Number: (410) 879-2000
Email address: CountyExecutive@harfordcountymd.gov
Fax number: (410) 638-1387

SWPPP Contact:
Name: Richard Wise
Telephone number: (410) 638-3217 X2446
Email address: rhwise@harfordcountymd.gov
Fax number: (410) 879-8439

1.3 Stormwater Pollution Prevention Team

	NAME	TITLE	PHONE NUMBER	RESPONSIBILITIES
NPDES Program Manager	Danielle Hankins	Administrator	410-638-3217 X1176	Overseeing NPDES Program
Leader	Matt McKay	District Supervisor	410-612-1616 x7650	Overseeing activities occurring at the Abingdon Highway Maintenance Facility SWPPP Preparation Implementing BMPs Evaluating BMPs to measure effectiveness of plan
Member	Jim Hodge	Crew Chief	410-612-1616 x7653	Monitoring Site Inspections Training
Member	Dan Ballman	Crew Chief	410-612-1616 x7651	Monitoring Site Inspections Training
Member	Richard Wise	Watershed Restoration Specialist	410-638-3217 X2446	Site assessments Identification of pollutant sources and risks SWPPP Preparation

1.4 Activities at the Facility

The Abingdon Highway Maintenance Facility is located at 3111 Philadelphia Road, Abingdon, Maryland 21009. The Abingdon Highway Maintenance Facility serves as a fueling site, provides vehicle / equipment maintenance services and stores materials such as salt, sand, traffic paint and herbicide essential in ensuring the safety of motorists traveling Harford County roadways. The site also serves as an antifreeze and oil recycling drop-off site, which is operated and maintained by Maryland Environmental Service. Additionally, the Water and Sewer Maintenance Division is located at the site.

1.5 General Location Map

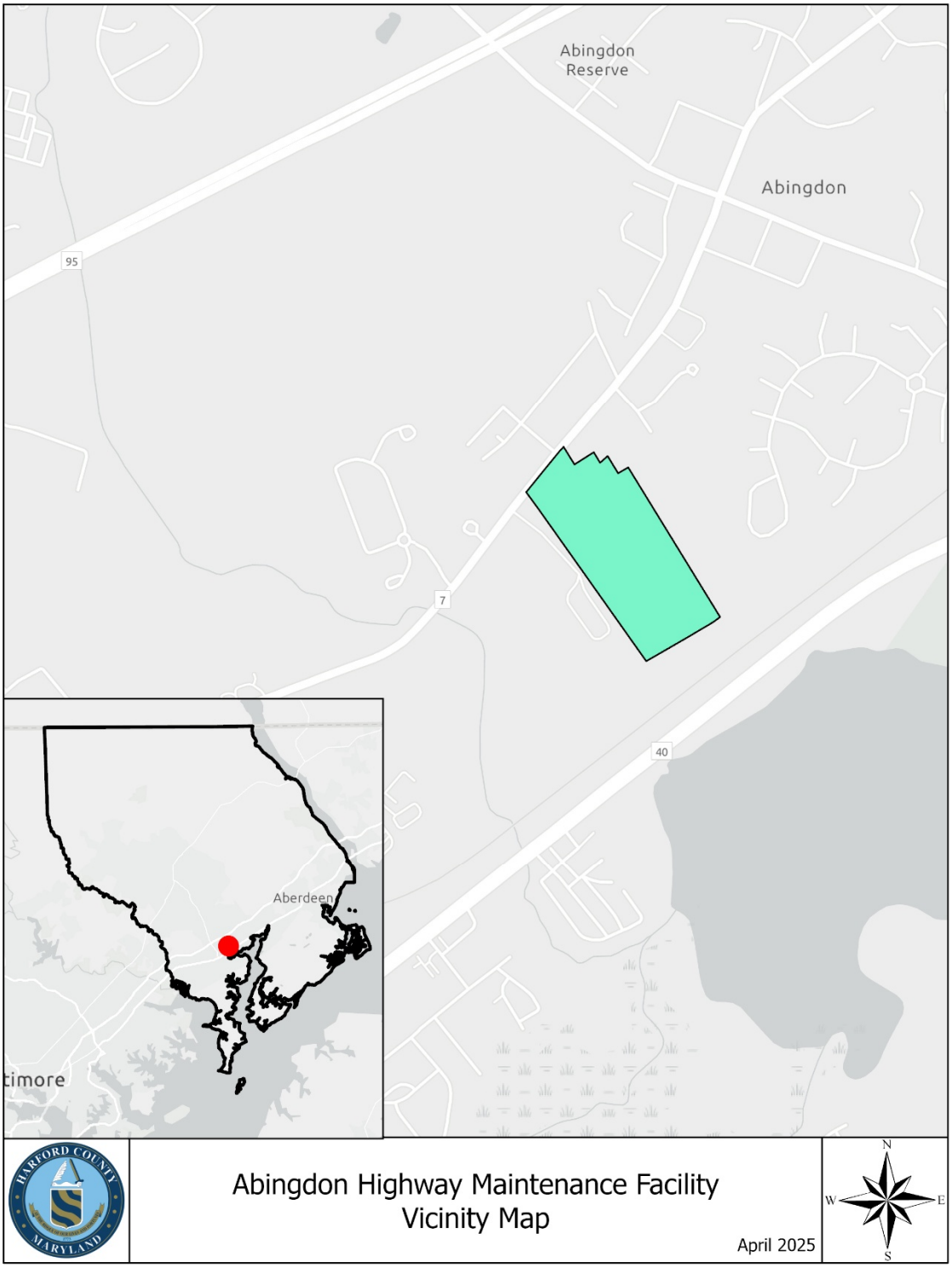

1.6 Site Map

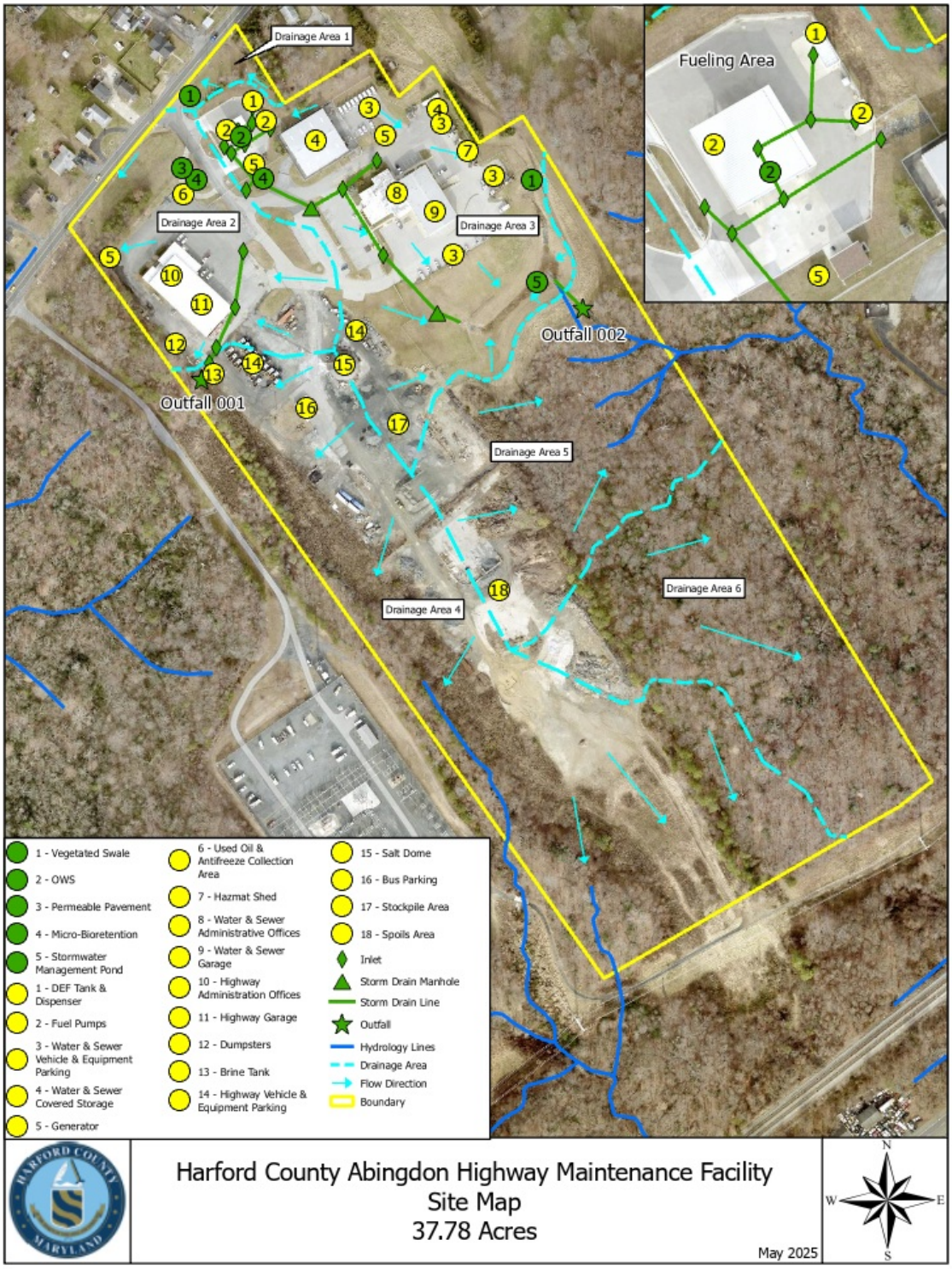
Drainage Area 1
Drainage Area 2
Drainage Area 3
Drainage Area 4
Drainage Area 5
Drainage Area 6
Fueling Area
Outfall 001
Outfall 002
1 - Vegetated Swale
2 - OWS
3 - Permeable Pavement
4 - Micro-Bioretention
5 - Stormwater Management Pond
1 - DEF Tank & Dispenser
2 - Fuel Pumps
3 - Water & Sewer Vehicle & Equipment Parking
4 - Water & Sewer Covered Storage
5 - Generator
6 - Used Oil & Antifreeze Collection Area
7 - Hazmat Shed
8 - Water & Sewer Administrative Offices
9 - Water & Sewer Garage
10 - Highway Administration Offices
11 - Highway Garage
12 - Dumpsters
13 - Brine Tank
14 - Highway Vehicle & Equipment Parking
15 - Salt Dome
16 - Bus Parking
17 - Stockpile Area
18 - Spoils Area
Inlet
Storm Drain Manhole
Storm Drain Line
Outfall
Hydrology Lines
Drainage Area
Flow Direction
Boundary
Harford County Abingdon Highway Maintenance Facility
Site Map
37.78 Acres
May 2025
N
W
E
S

SECTION 2: POTENTIAL POLLUTANT SOURCES

2.1 Industrial Activity and Associated Pollutants

Industrial Activity	Associated Pollutants
Material Storage - Covered	Oil, antifreeze, paint, fertilizer, grease, herbicide, sorbents, solvents, lime, concrete mix, liquid asphalt, deicing materials, dechlorination materials
Material Storage – Outdoors	Brine, blacktop millings, stone, topsoil
Fueling Station	Diesel fuel, unleaded fuel
Salt Dome / Salt Brine Tank	Salt
Used Oil & Antifreeze Collection	Oil, antifreeze
Accidental Spills & Leaks	Diesel fuel (generators)

2.2 Spills and Leaks

Areas of Site Where Potential Spills/Leaks Could Occur

Location	Outfalls
Fueling Station	Overland flow
Salt Dome / Salt Brine Tank	Overland flow
Oil/Antifreeze Recycling	Overland flow
Stone, topsoil, millings outdoor storage	Overland flow
Parking lots	Outfall 001; Outfall 002
Generators	Overland flow

Description of Past Spills/Leaks

Date	Description	Outfalls
	none	

2.3 Non-Stormwater Discharges Documentation

Date	Method	Discharge noted	Corrective Action
	Visual Inspection	none	

2.4 Salt Storage

Abingdon Highway Maintenance Facility has one enclosed salt storage dome and one salt brine tank. The dome has a maximum capacity of approximately 600 tons of salt and the salt brine tank has a capacity of 5,500 gallons.

2.5 Visual Monitoring Summary

Monthly visual inspections were performed during the last permit period.

2.6 PFAS and PCB Source Identification

There are no known sources of PFAS or PCB at the Abingdon Highway Maintenance Facility.

SECTION 3: STORMWATER CONTROL MEASURES

3.1 Minimize Exposure

Outdoor Storage Areas

Receptacles are specifically designed to store used oil filters, waste oil and waste antifreeze until transported for recycling. Secondary containment is in place. The area is operated and maintained by Maryland Environmental Service

Indoor Storage Areas

Storage of materials used for various operations such as equipment maintenance and road painting in containers and/or in environments that are not susceptible to storm water exposure.

Highway Maintenance Building

Material	Purpose and/or Location	Quantity Stored (Maximum)	Likelihood of contact with storm water.
Antifreeze	Used for equipment.	50 Gallons	There is no likelihood of antifreeze encountering storm water since it is stored in containers under cover.
Fertilizer	Used for landscaping.	40 Gallons	There is a minimal likelihood that fertilizer will encounter storm water. The utilization of fertilizer is under controlled conditions and utilizes Best Management Practices resulting in little to no exposure to storm water.
Grease	Used for lubrication of equipment.	50 Pounds	There is no likelihood of grease encountering storm water since all lubrication of equipment occurs indoors.
Oil, Motor	Used for equipment.	10 Gallons	There is no likelihood of motor oil encountering storm water since its usage occurs indoors.
Paint	Used for maintenance purposes.	15 Gallons	There is no likelihood of paint encountering storm water since the application of paint occurs in dry conditions and dries in minutes.

Roundup Herbicide	Used as a herbicide.	2 Gallons	There is a minimal likelihood that Roundup herbicide will encounter storm water. The utilization of Roundup is under controlled conditions and utilizes Best Management Practices resulting in little or no exposure to storm water.
Solvents	Used for cleaning equipment parts.	5 Gallons	There is no likelihood of solvents encountering storm water since they have an indoor use.

Water and Sewer Maintenance Building

Material	Purpose and/or Location	Quantity Stored (Maximum)	Likelihood of contact with storm water
Antifreeze	Maintenance of equipment	10 gallons	There is no likelihood of antifreeze encountering storm water as it is stored in containers under cover and use is primarily indoors.
Grease, Hydraulic Fluid	Maintenance of equipment	20 gallons	There is no likelihood of these materials encountering storm water as it is stored in containers under cover and use is primarily indoors.
Gasoline, Gasoline/oil mix, Diesel, Kerosene	Fuel for small equipment (mowers, saws, pumps, tampers)	100 gallons	There is minimal likelihood of these materials encountering storm water. The materials are stored and transferred to small containers indoors. Only small quantities are transferred outdoors as needed.
Oil, Motor	Equipment maintenance	20 gallons	There is no likelihood of these materials encountering storm water as it is stored in containers under cover and used primarily indoors.
Paint	Facility and equipment maintenance; utility marking	15 gallons	There is no likelihood of paint encountering storm water as it is only applied in dry conditions and dries quickly.
Herbicide, Insecticide	Landscape and facility maintenance	5 gallons	There is minimal likelihood that these materials will encounter storm water. These materials are used on a limited basis using handheld equipment, in accordance with manufacturer recommendations.
Solvents	Used for cleaning parts	3 gallons	There is no likelihood that these materials will encounter storm water as it is stored in containers under cover and use is primarily indoors.
Sorbent material/spill kit	Used for spill clean up	100 pounds	There is no likelihood of these materials will encounter storm water as it is stored in containers under cover and use is primarily indoors.
Dechlorination tablets	Used to dechlorinate potable water during system flushing	1,000 pounds	There is minimal likelihood that these materials will encounter storm water. The tablets are stored in sealed containers until use.
Degreasing agents - Liquid	Cleaning of sanitary sewers	150 gallons	There is minimal likelihood that these materials will encounter storm water. The material is stored in sealed containers until transferred to degreasing equipment.
Degreasing agents – Granular	Cleaning of sanitary sewers	1,500 pounds	There is minimal likelihood that these materials will encounter storm water. The material is stored in sealed containers until use, at which time it is placed directly in the sanitary sewer.
Concrete mix & Portland cement	Repair of utility systems	4,000 pounds	There is minimal likelihood that these materials will encounter storm water. The material is stored indoors until use. Curing of concrete occurs promptly.
Powdered Limestone	Sewer overflow treatment	3,000 pounds	There is minimal likelihood that these materials will encounter storm water prior to use. The limestone is applied to areas affected by sewer overflows at the direction of the local Health Department. Once applied to the ground surface, contact with storm water is likely.
Liquid asphalt	Repair of utility systems	20 gallons	There is minimal likelihood that these materials will encounter storm water. The material is stored in indoors until use. The material is applied under dry conditions, and sets up quickly to

			prevent runoff.
Deicing compound (sidewalk)	Facility maintenance	100 pounds	There is minimal likelihood that these materials will encounter storm water prior to use. Once applied to the sidewalks, contact with storm water is likely. Use is limited to icy conditions as required for personnel safety.

3.2 Good Housekeeping

The Abingdon Highway and Water & Sewer Maintenance Facilities have implemented the following good housekeeping measures listed below:

Operation and Maintenance

- Maintain dry and clean floors and ground surfaces by using brooms, shovels, vacuum cleaners, or cleaning machines.
- Regularly pick up and dispose of garbage and waste material.
- Make sure equipment is working properly.
- Routinely inspect for leaks or conditions that could lead to discharges of chemicals or contact of storm water with raw materials, intermediate materials, waste materials, or products.
- Make sure outside areas are kept in a neat and orderly condition.
- Implement weekly housekeeping inspections.
- Ensure that spill cleanup procedures are understood by employees.

Material Storage Practices

- Provide adequate aisle space to facilitate material transfer and easy access for inspections.
- Store containers, drums, and bags away from direct traffic routes to prevent accidental spills.
- Stack containers according to manufacturers' instructions to avoid damaging the containers from improper weight distribution.
- Store containers on pallets or similar devices to prevent corrosion of the containers due to contact with moisture on the ground.
- Assign the responsibility of hazardous material inventory to a limited number of people who are trained to handle hazardous materials.

Material Inventory Procedures

- Identify all chemical substances present in the workplace.
- Label all containers to show the name and type of substance, stock number, expiration date, health hazards, suggestions for handling, and first aid instructions.
- Clearly mark on the inventory hazardous materials that require special handling, storage, use, and disposal considerations.
- Ensure storage areas are designed to contain spills.
- Implement a shelf-life program which can reduce waste that results from overstocking and allows for the disposal of outdated materials.

Employee Participation

- Incorporate information sessions on good housekeeping practices into the facility's employee training program.
- Discuss good housekeeping at employee meetings.
- Post bulletin boards with updated good housekeeping procedures, tips, and reminders.

3.3 Maintenance

The Abingdon Highway Maintenance Facility implemented the following Preventative Maintenance measures and conducts inspections as noted below.

Stormwater Management Pond

- Maintenance of the stormwater pond shall consist of biannual visual inspections of all components of the stormwater management pond performed by Harford County stormwater management personnel in March and September.
- Grass on the dam and non-wetland portions shall be mowed any time the grass is over six inches tall.
- Maintenance of vegetative cover shall consist of mowing, liming and fertilizing.
- At a minimum, lime and fertilizer shall be applied once every two years.
- There shall be no planting of trees or woody vegetation on the embankment.
- Rills on the slopes of the dam shall be filled and thoroughly compacted with suitable materials. These areas shall be reseeded or resodded, limed and fertilized as needed.
- Fences, gates and all appurtenances shall be kept in good repair and free of trash.

Deterioration of pipe, riser or embankment shall be reported to the Harford County Department of Public Works at (410) 638-3545 as soon as discovered and prior to repair. Harford County or Harford County's representative shall perform all required maintenance, at Harford County's expense.

Bioretention Facility

- Maintenance of the bioretention facility shall consist of replacing mulch and soil in any areas that have experienced erosion or washout.
- Dead plant material shall be removed, and plant material shall be inspected and pruned as necessary on a biannual basis.
- Soil erosion shall be addressed on an as-needed basis.

Vegetative Areas

- Personnel shall conduct inspections of the permanent vegetative areas around the perimeter of the facility to determine if repairs, replacements and reseedings are necessary.

Employee Participation

- Schedule monthly Maintenance Inspections.
- Implement a schedule to adjust, repair, or replace equipment or systems in a regular or timely manner.
- Promptly repair defective equipment found during inspections and testing.
- Inspect and test facility equipment and systems to uncover conditions that could cause breakdowns or failures resulting in discharges of pollutants to surface waters.
- Maintain records on Preventive Maintenance inspections.

3.4 Spill Prevention and Response

Upon inspection of the Abingdon Highway Maintenance Facility, the areas identified most susceptible to a spill were the fueling, storage and oil recycling areas. Spill clean-up kits are available in these areas to absorb and properly dispose of spilled materials.

Preventive measures implemented by Harford County to improve material handling procedures and storage include the following:

- Adopting effective housekeeping practices.
- Performing regular visual inspections to identify signs of wear on storage containers, equipment, etc.
- Performing preventive maintenance on equipment, tanks, etc.
- Using filling procedures for tanks and other equipment to minimize spills.
- Using material transfer procedures that reduce the chance of leaks or spills.
- Substituting less or non-toxic materials for toxic materials.
- Ensuring appropriate security.
- Developing ways to recycle, clean, and/or reuse process materials to reduce the volume brought into the facility.
- Installing leak detection devices, overflow controls, and diversion berms.

In the event of a spill, staff will follow the procedures listed below:

1. Identify the material, the source, and approximate quantity.
2. Attend to any individuals who are injured and contact 911 for further assistance if necessary.
3. Evaluate the potential for fires, explosions, etc.
4. If possible, stop the release to prevent the situation from worsening.
5. Contain the spill using pads, berms, ditches, etc.
6. Evaluate if the situation is an immediate threat to the life or health of fellow employees.
7. If the material has a Reportable Quantity (RQ) Requirement and the spill was in excess of the RQ amount, contact Emergency Response Agencies.
8. Prevent other humans or vehicles from exposure to the spill by sectioning off the area, posting a sign, or having someone guard the area.

9. Organize those individuals responsible for spill cleanup, review the situation with them, any hazards they may encounter, and ensure they are using proper equipment, protective clothing, following proper clean up, decontamination, and disposal procedures.
10. Dispose of contaminated absorbents and other supplies properly and decontaminate any equipment used in the clean-up process and dispose of contaminated absorbents and other supplies properly.

Harford County shall, after any spill, evaluate the Response Plan and make any necessary improvements to the Plan.

3.5 Erosion and Sediment Controls

Harford County maintains vegetative buffers, a storm water management pond and micro-bioretention areas to limit erosion at the Abingdon Highway Maintenance Facility. Harford County's Department of Public Works Storm Water Management staff conducts annual inspections to ensure proper maintenance of controls.

3.6 Management of Runoff

The following best management practices are installed at the Abington Highways Maintenance Facility:

Storm Water Management Pond

This is a 0.69-acre micro pool extended detention facility. It treats 100% of the required water quality volume and 200% of the required CPv and manages the 1-year and 10-year storms, as required.

Micro-Bioretention Facility 1

This micro-bioretention facility treats 100% of the required WQv.

Micro-Bioretention Facility 2

This micro-bioretention facility treats 108% of the minimum required ESDv.

Vegetative Areas

Vegetated areas receive runoff from parking lots, the salt dome, the stockpile area and the spoils area.

These facilities are inspected triennially as required by the County and MDE. Inspection reports are available from the County.

3.7 Salt Storage Piles or Piles Containing Salt

Abingdon Highway Maintenance Facility has one enclosed salt storage dome and one salt brine tank. The dome houses approximately 600 tons of salt that is used for deicing operations. The salt brine tank has a capacity of 5,500 gallons for highway deicing pre-treatment operations. Good Housekeeping practices (sweeping, equipment maintenance) are employed to minimize exposure of salt to stormwater. Runoff from the paved area is treated with vegetated areas and the stormwater management facility.

3.8 20-SW Sector-Specific Non-Numeric Effluent Limits

Within Sector AD.a. Department of Public Works and Highways Maintenance Facilities, the Specific Non-Numeric Effluent Limits are described in Sector P Transportation and Warehousing.

P.3 Additional Technology-Based Effluent Limits.

P.3.1 Good Housekeeping Measures

P.3.1.1 Vehicle and Equipment Storage Areas

P.3.1.2 Fueling Areas

The fueling area is covered to minimize exposure to stormwater. Spills are handled as described in Item 3.4 above.

P.3.1.3 Material Storage Areas

The material storage areas are handled as described in Item 3.2 above.

P.3.1.4 Vehicle and Equipment Cleaning Areas

P.3.1.5 Vehicle and Equipment Maintenance Areas

P.3.1.6 Locomotive Sanding

Not applicable.

P.4 Additional SWPPP Requirements

P.4.1 Drainage Area Site Map

The site map is provided in Section 1.6 above.

P.4.2 Potential Pollutant Sources

Potential Pollutant Sources are described in Items 2.1 and 2.2 above.

P.4.3 Description of Good Housekeeping Measures

Good Housekeeping Measures are described in Section 3.2 above.

P.5 Additional Inspection Requirements

Inspection procedures are described in Sections 3.2 and 3.3 above.

3.9 Employee Training

Abingdon Highway Maintenance Facility conducts the employee training programs described below and makes modifications as necessary to ensure all employees are properly educated of all measures contained in the pollution prevention plan. Employee training records shall be kept on file at the Abingdon Highway Maintenance Facility.

TRAINING TOPICS	DESCRIPTION OF TRAINING PROGRAM / MATERIALS	SCHEDULE FOR TRAINING (LIST DATES)	ATTENDEES
SPILL PREVENTION AND RESPONSE Identifying potential spill areas and drainage routes; Procedures for reporting spills; Appropriate material handling procedures and storage requirements; Implementing spill response procedures.	Videos and Posted Notices	Routine training to be conducted by Abingdon Highway Maintenance Facility staff	All shop employees
GOOD HOUSEKEEPING Regular vacuuming and/or sweeping; Prompt cleanup of spilled materials to prevent pollution run-off; Identify where brooms, vacuums, sorbents, foams, neutralizing agents, and other good housekeeping and spill response equipment are located; Instruction on securing drums and containers and frequently checking for leaks and spills; Outline a regular schedule for housekeeping activities.	Safety Training Meetings	Annually	All shop employees
MATERIAL MANAGEMENT PRACTICES Organize materials for storage; Identify all toxic and hazardous substances stored and handled onsite; Discuss handling procedures for all toxic and hazardous materials.	Briefings	Annually	All shop employees

3.10 Non-Stormwater Discharges

Non-stormwater discharges are addressed as described in Section 2.3 above.

3.11 Waste, Garbage and Floatable Debris

Waste, Garbage and Floatable Debris are addressed in Section 3.2 above.

3.12 Dust Generation and Vehicle Tracking of Industrial Materials

Good housekeeping measures on paved surfaces are employed to minimize dust generation.

SECTION 4: SCHEDULES AND PROCEDURES FOR MONITORING

Abingdon Highway Maintenance Facility does not have Benchmark Monitoring Requirements as described for Sector AD.a *Department of Public Works and Highways Maintenance Facilities***.** Stormwater from the Abingdon Highway Maintenance Facility discharges to unnamed tributaries of Otter Point Creek and ultimately, the Bush River. A TMDL has been developed for PCBs in the tidal oligohaline portion of Bush River. There are no known or suspected sources of PCBs on the site, and therefore, no monitoring for PCBs is required.

Location	Frequency	Method	Responsible Person
Outfall 001	**Quarterly**	**Visual evaluation**	**Crew Chief**
Outfall 002	**Quarterly**	**Visual evaluation**	**Crew Chief**

Once per quarter, a stormwater sample must be collected from each outfall in such a manner that they are representative of the stormwater discharge from that outfall. A quality storm event is any storm where there is measurable discharge. The sample(s) shall be collected in a colorless glass or plastic container and visually examined for the parameters listed on the Quarterly Visual Monitoring Form (Attachment D). The Quarterly Visual Monitoring Form shall be signed and dated by the person conducting the visual examination. A copy of the Quarterly Visual Monitoring Form shall be kept with the facility's SWPPP and be available when requested.

Should there be any indication of a pollutant, an inspection will be performed to determine the source of the pollutant and corrective actions will be taken to remove the source.

SECTION 5: INSPECTIONS

In addition to the quarterly visual monitoring of stormwater discharge, routine site inspections will be performed as described in Sections 3.2 and 3.3 above on a quarterly basis as required by the county's 20-SW permit. Annually, a comprehensive site evaluation (Attachment E) will be performed by qualified personnel. This inspection will include the following elements:

- Inspect storm water drainage areas for evidence of pollutants entering the drainage system.
- Evaluate the effectiveness of measures to reduce pollutant loadings and whether additional measures are needed.
- Observe structural measures, sediment controls, and other stormwater BMPs to ensure proper operation.
- Inspect any equipment needed to implement the plan, such as spill response equipment.
- Revise the plan as needed within two weeks of inspection (potential pollutant source description and description of measures and controls).
- Implement any necessary changes in a timely manner, but at least within 12 weeks of the inspection.
- Prepare a report summarizing inspection results and follow up actions, the date of inspection and personnel who conducted the inspection; identify any incidents of non-compliance or certify that the facility is in compliance with the plan.
- Document all incidents of noncompliance in the inspection report. Where there are no incidents of noncompliance, the inspection report must contain a certification that the facility is in compliance with the plan.
- Sign the report and submit it with the plan.

SECTION 6: SWPPP CERTIFICATION

I certify under penalty of law that this document and all attachments were prepared under my direction or supervision in accordance with a system designed to assure that qualified personnel properly gathered and evaluated the information submitted. Based on my inquiry of the person or persons who manage the system, or those persons directly responsible for gathering the information, the information submitted is, to the best of my knowledge and belief, true, accurate, and complete. I am aware that there are significant penalties for submitting false information, including the possibility of fine and imprisonment for knowing violations.

Name: Danielle Hankins Title: Administrator

Signature: Danielle M Hankins I am approving this document 2025.05.27 15:15:33-04'00' Date: 05.27.2025

SECTION 7: SWPPP MODIFICATIONS

Original Completion Date: June 2023

Revision Date: April 2024

Revisions:

- Section 1.1 Facility Information – Updated 20SW Permit Number
- Section 1.3 Stormwater Pollution Prevention Team
- Section 1.6 Site Map – Added location of new salt brine tank
- Section 2.1 Industrial Activity and Associated Pollutants
    - Addition of the salt brine tank
- Section 2.4 Salt Storage
    - Addition of the salt brine tank
- Section 3.7 Salt Storage Piles or Piles Containing Salt
    - Addition of the salt brine tank
- Attachment B – Update of the site map showing the location of the new salt brine tank

Revision Date: May 2025

Revisions:

- Overall reformatting and grammar corrections
- Section 1.1 Facility Information
    - Added name of receiving water body
- Section 1.2 Contact Information/Responsible Parties
    - Updated SWPPP contact
- Section 1.3 Stormwater Pollution Prevention Team
    - Updated Administrator
    - Updated Watershed Restoration Specialist
- Section 1.5 General Location Map
- Section 1.6 Site Map
    - Updated county seal
    - Revised drainage areas
    - Relabeled drainage areas
    - Corrected inlet locations
    - Added storm drain line
    - Added OWS
    - Added DEF tank and dispenser
    - Added vehicle and equipment parking areas
    - Added generators
    - Removed transformers

    - Added Hazmat shed location
    - Added covered storage location
    - Added dumpster location
- Section 2.1 Industrial Activity and Associated Pollutants
    - Added accidental spills and leaks of diesel fuel related to the facility's generators
- Section 2.2 Spills and Leaks – Areas of Site Where Potential Spills/Leaks Could Occur
    - Added generators
    - Renamed Outfall A to Outfall 001 and Outfall B to Outfall 002
- Section 3.1 Minimize Exposure – Indoor Storage Areas – Highway Maintenance Building and Water and Sewer Maintenance Building
    - Removed column for Quantity Used
    - Updated column for Quantity Stored to represent the maximum amount of product to be stored at any given time
    - Updated quantity stored for fertilizer
    - Removed PIG Absorbents
- Section 3.6 Management of Runoff
    - Updated language regarding vegetative areas
- Section 4 Schedules and Procedures for Monitoring
    - Revised language regarding the collection of the quarterly visual monitoring samples
- SWPPP Attachments
    - Updated Attachment A – General Location Map included as an 11"x17" map
    - Updated Attachment B – Site Map included as an 11"x17" map
    - Included Attachment D – Quarterly Visual Monitoring Form
    - Included Attachment E – EPA Annual Reporting Form

SWPPP ATTACHMENTS

Attachment A – General Location Map

Attachment B – Site Map

Attachment C – General Permit 20-SW

Attachment D – Quarterly Visual Monitoring Form

Attachment E – EPA Annual Reporting Form

Attachment A – General Location Map

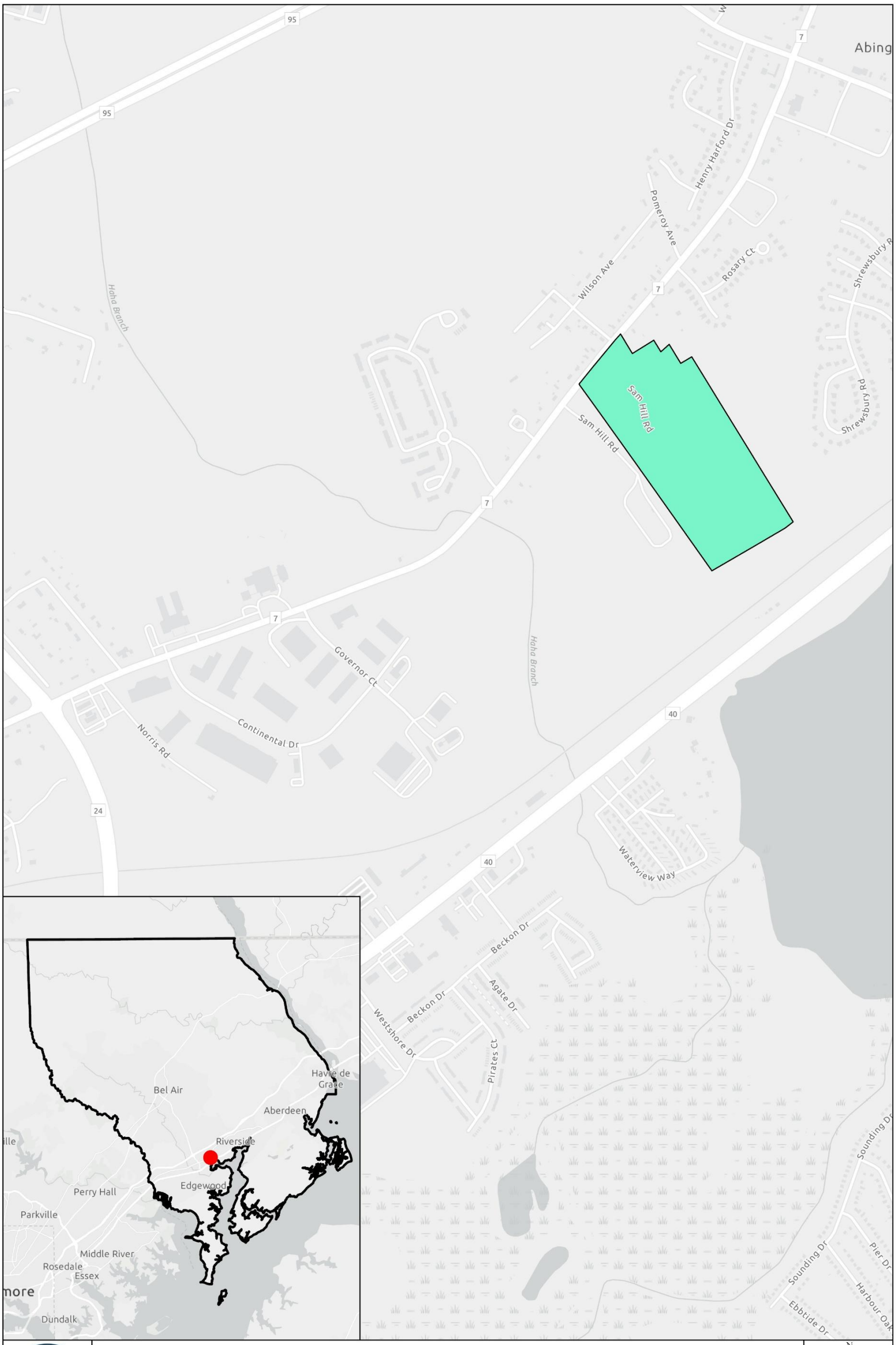

Attachment B – Site Map

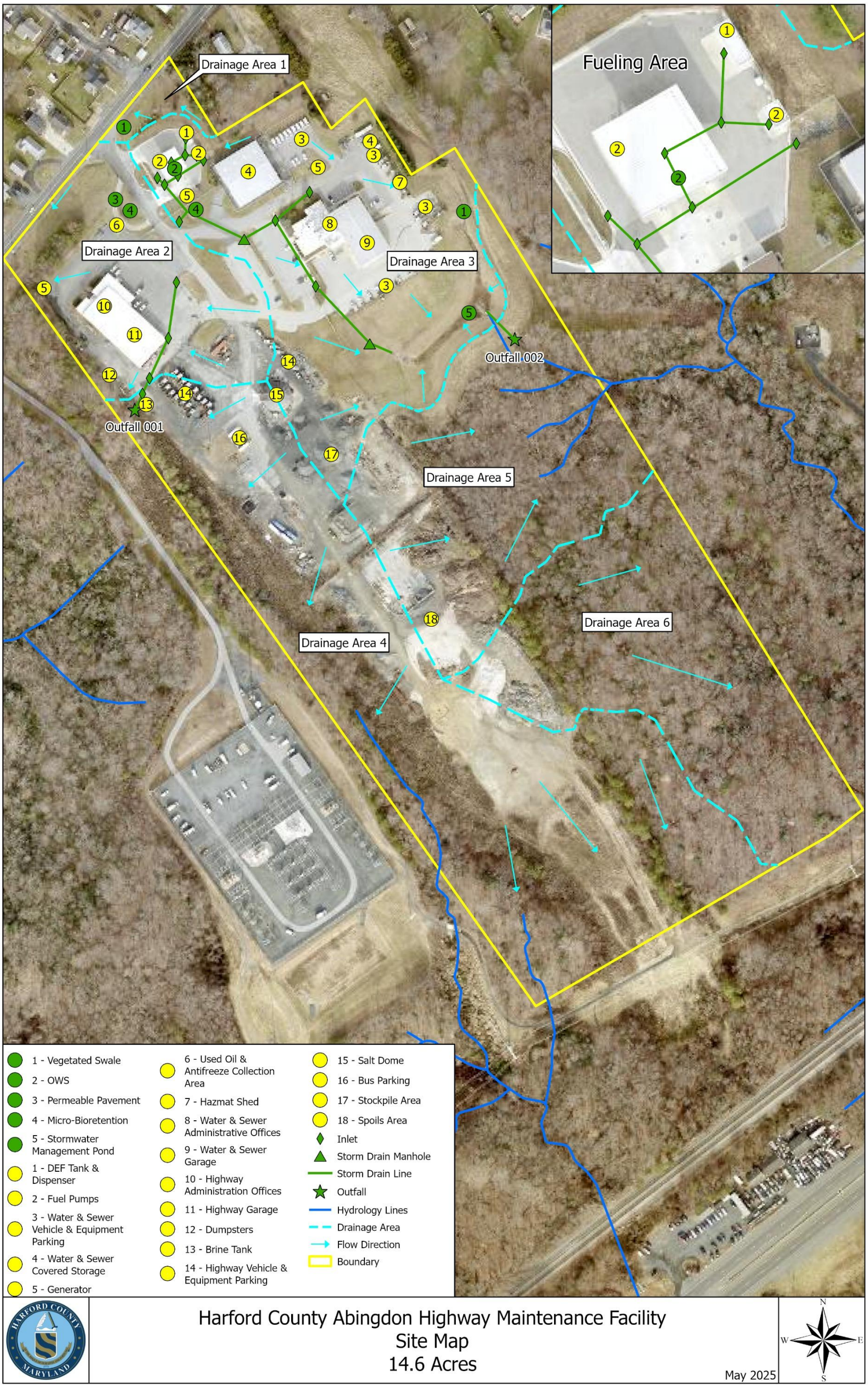

Attachment C – General Permit 20-SW

Attachment D – Quarterly Visual Monitoring Form

Quarterly Visual Monitoring Form

Fill out a separate form for each outfall sampled.

Sample Location					
Quarter / Year:		**Date / Time Collected:**		**Date / Time Examined:**	
Qualifying Storm Event?	Yes No	**Runoff Source:**	Rainfall Snowmelt		
Collector's Name & Title					
Examiner's Name & Title					

Parameter	Parameter Description	Parameter Characteristics
1. Color	Does the stormwater appear to have any color? **Yes** **No (Clear)**	If Yes, describe: *Yellow* *Brown* *Red* *Gray* *Other*:
2. Clarity	Is the stormwater not clear? **Yes** **No**	If not clear, which of the following best describes the clarity of the stormwater? *Suspended Solids* *Milky/Cloudy* *Opaque* *Other :*
3. Oil Sheen	Can you see a rainbow effect or sheen on the water surface? **Yes** **No**	Which best describes the sheen? *Rainbow sheet* *Floating oil globules* *Other :*
4. Odor	Does the sample have an odor? **Yes** **No**	If Yes, describe: *Chemical* *Musty* *Rotten Eggs* *Sewage* *Sour Milk* *Oil/Petroleum* *Other :*
5. Floating Solids	Is there anything on the surface of the sample? **Yes** **No**	If Yes, describe: *Suds* *Oily Film* *Garbage* *Sewage* *Water Fowl Excrement* *Other :*
6. Suspended Solids	Is there anything suspended in the sample? **Yes** **No**	Describe:
******Leave sample undisturbed for 30 minutes.******		
7. Settled Solids	Is there anything settled on the bottom of the sample? **Yes** **No**	Describe: (*note type, size and material after sample is not disturbed for 30 minutes)*
8. Foam	Does foam or material form on the top of the sample surface if you shake it? **Yes** **No**	Describe:

9. If there are any visible indicators of pollution identify (1) where the pollution may come from and (2) any corrective actions taken.

Stormwater Collector's Signature and Date:

Stormwater Examiner's Signature and Date:

Note – Sample should be collected and analyzed in a colorless glass or plastic bottle.

Instructions for Completing the Visual Monitoring Form

Per PART V. INSPECTIONS, MONITORING, AND REPORTING, you must collect a stormwater sample from each outfall once each quarter for the entire permit term and conduct a visual assessment of each sample. You must follow the monitoring procedures outlined in Part V.C. These samples should be collected in such a manner that they are representative of the stormwater discharge from that outfall. Each assessment must be kept onsite with your SWPPP and available for inspection and review by the Department at anytime.

First, fill out all information on the top of the visual monitoring form. A qualifying storm event is any storm where there is a measurable discharge. Then, take a grab sample in a clear container. Evaluate the sample in a well-lit area for the following parameters:

1. **Color:** Record the best description of the sample color in the appropriate space on the form.
2. **Clarity**: This parameter refers to how cloudy the sample is. It is *usually* an indication of fewer pollutants in the water if the sample is clear or transparent. If the clarity has changed since the last sample, try to identify what might have caused this to happen.
   - **Clear** – Sample doesn't block any light; can be seen through regardless of color.
   - **Cloudy** – Sample blocks some light; objects not clear but can be identified looking through the sample.
   - **Very Cloudy** – Sample blocks most light; objects cannot be identified looking through the sample.
   - **Opaque** – Sample blocks all light; objects cannot be seen when looking through the sample.
3. **Oil Sheen:** Record whether or not an oil sheen is present. If a film of iridescent color is noted on the surface of the sample or a rainbow effect appears to be floating on the surface of the water, this usually indicates oil is present.
4. **Odor:** If sample has no odor other than natural rainwater or snowmelt, write "NO" on the visual monitoring form. Note the presence of any of the following odors if detected, such as gasoline, diesel, oil, solvents (WD-40, other petroleum products, etc.), garbage, fishy, sweet/sugary, any other unusual odors not normally present in clean runoff from the area sampled.
5. **Floating Solids:** A contaminated flow may contain solids or liquids floating on the surface. Identifying floatables can aid in finding the source of the contamination. Examples of floatables are spoiled food products, oils, plant parts, solvents, sawdust, foams and fuel. Give a general description of the type of floating solids present (wood chips, leaf debris, algae, etc) in the general comments section for each sample. Identify amount of floating solids as described below.
   - **High** – More than 20% of the surface of the sample is covered with floating solids.
   - **Moderate** – Less than 20% of the surface of the sample is covered with floating solids.
   - **Slight** – Only a few floating particles observed on the surface of the sample.
   - **None** – No floating solids present on the surface of the sample.
6. **Suspended solids:** Record whether or not suspended solids are present in the sample. Suspended solids are particles floating inside the column of water, not on top, and may contribute to changes in water color or clarity. Cracked or deteriorated concrete or peeling surface paint at an outfall usually indicates the presence of severely contaminated discharges. Contaminants causing this type of damage are usually very acidic or basic.

---------- WAIT 30 MINUTES ----------

Leave the sample undisturbed for 30 minutes to allow the water and anything in it to settle.

7. **Settled Solids:** After 30 minutes has passed, give a general description of the type of settled solids present (sand, decayed plant matter, rust particles, etc.) in the general comments section.
8. **Foam:** After completing #7, shake the bottle gently. Record foam results on the form as they most closely match one of the descriptions listed below.
   - **None** – Most bubbles break down within ten (10) seconds of shaking; only a few large bubbles persist longer than ten (10) seconds.
   - **Moderate** – Many small bubbles are present but these bubbles persist for less than two (minutes) after shaking.
   - **High** – Many small bubbles are present and they persist longer than two (2) minutes after shaking.
9. Detail any concerns, corrective actions taken and any other indicators of pollution present in the sample. This should include the identified source if there are visible indicators present in the sample. The person performing test must sign and date each form**.**

Attachment E – EPA Annual Reporting Form

NPDES Permit Tracking No.:

UNITED STATES ENVIRONMENTAL PROTECTION AGENCY
WASHINGTON, DC 20460

Annual Reporting Form

A. GENERAL INFORMATION

1. Facility Name:

2. NPDES Permit Tracking No.:

3. Facility Physical Address:

a. Street:

b. City: c. State: d. Zip Code: -

4. Lead Inspectors Name: Title:

Additional Inspectors Name(s):

5. Contact Person: Title:

Phone: - - Ext. E-mail:

6. Inspection Date : / /

B. GENERAL INSPECTION FINDINGS

1. As part of this comprehensive site inspection, did you inspect all potential pollutant sources, including areas where industrial activity may be exposed to stormwater?
☐ YES ☐ NO

If NO, describe why not:

NOTE: *Complete Section C of this form for each industrial activity area inspected and included in your SWPPP or as newly identified in B.2 or B.3 below where pollutants may be exposed to stormwater.*

2. Did this inspection identify any stormwater or non-stormwater outfalls not previously identified in your SWPPP? ☐ YES ☐ NO

If YES, for each location, describe the sources of those stormwater and non-stormwater discharges and any associated control measures in place:

NPDES Permit Tracking No.:

3. Did this inspection identify any sources of stormwater or non-stormwater discharges not previously identified in your SWPPP? ☐ YES ☐ NO

If YES, describe these sources of stormwater or non-stormwater pollutants expected to be present in these discharges, and any control measures in place:

4. Did you review stormwater monitoring data as part of this inspection to identify potential pollutant hot spots? ☐ YES ☐ NO ☐ NA, no monitoring performed

If YES, summarize the findings of that review and describe any additional inspection activities resulting from this review:

5. Describe any evidence of pollutants entering the drainage system or discharging to surface waters, and the condition of and around outfalls, including flow dissipation measures to prevent scouring:

6. Have you taken or do you plan to take any corrective actions, as specified in Part 3 of the permit, since your last annual report submission (or since you received authorization to discharge under this permit if this is your first annual report), including any corrective actions identified as a result of this annual comprehensive site inspection?

☐ YES ☐ NO

If YES, how many conditions requiring review for correction action as specified in Parts 3.1 and 3.2 were addressed by these corrective actions? ☐☐

NOTE: *Complete the attached Corrective Action Form (Section D) for each condition identified, including any conditions identified as a result of this comprehensive stormwater inspection.*

NPDES Permit Tracking No.:

C. INDUSTRIAL ACTIVITY AREA SPECIFIC FINDINGS

Complete one block for each industrial activity area where pollutants may be exposed to stormwater. Copy this page for additional industrial activity areas.

In reviewing each area, you should consider:

- Industrial materials, residue, or trash that may have or could come into contact with stormwater;
- Leaks or spills from industrial equipment, drums, tanks, and other containers;
- Offsite tracking of industrial or waste materials from areas of no exposure to exposed areas; and
- Tracking or blowing of raw, final, or waste materials from areas of no exposure to exposed areas.

INDUSTRIAL ACTIVITY AREA _____:

1. Brief Description**:**

2. Are any control measures in need of maintenance or repair? ☐ YES ☐ NO

3. Have any control measures failed and require replacement? ☐ YES ☐ NO

4. Are any additional/revised control measures necessary in this area? ☐ YES ☐ NO

If YES to any of these three questions, provide a description of the problem: (Any necessary corrective actions should be described on the attached Corrective Action Form)

INDUSTRIAL ACTIVITY AREA _____:

1. Brief Description:

2. Are any control measures in need of maintenance or repair? ☐ YES ☐ NO

3. Have any control measures failed and require replacement? ☐ YES ☐ NO

4. Are any additional/revised c necessary in this area? ☐ YES ☐ NO

If YES to any of these three questions, provide a description of the problem: (Any necessary corrective actions should be described on the attached Corrective Action Form)

INDUSTRIAL ACTIVITY AREA _____:

Brief Description:

2. Are any control measures in need of maintenance or repair? ☐ YES ☐ NO

3. Have any control measures failed and require replacement? ☐ YES ☐ NO

4. Are any additional/revised BMPs necessary in this area? ☐ YES ☐ NO

If YES to any of these three questions, provide a description of the problem: (Any necessary corrective actions should be described on the attached Corrective Action Form)

NPDES Permit Tracking No.:

NOTE: *Copy this page and attach additional pages as necessary*

INDUSTRIAL ACTIVITY AREA _____:

1. Brief Description:

2. Are any control measures in need of maintenance or repair? ☐ YES ☐ NO

3. Have any control measures failed and require replacement? ☐ YES ☐ NO

4. Are any additional/revised BMPs necessary in this area? ☐ YES ☐ NO

If YES to any of these three questions, provide a description of the problem: (Any necessary corrective actions should be described on the attached Corrective Action Form)

INDUSTRIAL ACTIVITY AREA _____:

1. Brief Description:

2. Are any control measures in need of maintenance or repair? ☐ YES ☐ NO

3. Have any control measures failed and require replacement? ☐ YES ☐ NO

4. Are any additional/revised BMPs necessary in this area? ☐ YES ☐ NO

If YES to any of these three questions, provide a description of the problem: (Any necessary corrective actions should be described on the attached Corrective Action Form)

INDUSTRIAL ACTIVITY AREA _____:

1. Brief Description:

2. Are any control measures in need of maintenance or repair? ☐ YES ☐ NO

3. Have any control measures failed and require replacement? ☐ YES ☐ NO

4. Are any additional/revised BMPs necessary in this area? ☐ YES ☐ NO

If YES to any of these three questions, provide a description of the problem: (Any necessary corrective actions should be described on the attached Corrective Action Form)

NPDES Permit Tracking No.:

D. CORRECTIVE ACTIONS

Complete this page for each specific condition requiring a corrective action or a review determining that no corrective action is needed. Copy this page for additional corrective actions or reviews.

Include both corrective actions that have been initiated or completed since the last annual report, and future corrective actions needed to address problems identified in this comprehensive stormwater inspection. Include an update on any outstanding corrective actions that had not been completed at the time of your previous annual report.

1. Corrective Action # ____ of ____ for this reporting period.

2. Is this corrective action:

- ☐ An update on a corrective action from a previous annual report; or
- ☐ A new corrective action?

3. Identify the condition(s) triggering the need for this review:

- ☐ Unauthorized release or discharge
- ☐ Numeric effluent limitation exceedance
- ☐ Control measures inadequate to meet applicable water quality standards
- ☐ Control measures inadequate to meet non-numeric effluent limitations
- ☐ Control measures not properly operated or maintained
- ☐ Change in facility operations necessitated change in control measures
- ☐ Average benchmark value exceedance
- ☐ Other (describe): _____

4. Briefly describe the nature of the problem identified:

5. Date problem identified: __/__/____

6. How problem was identified:

- ☐ Comprehensive site inspection
- ☐ Quarterly visual assessment
- ☐ Routine facility inspectio
- ☐ Benchmark monitoring
- ☐ Notification by EPA or State or local authorities
- ☐ Other (describe): _____

7. Description of corrective action(s) taken or to be taken to eliminate or further investigate the problem (e.g., describe modifications or repairs to control measures, analyses to be conducted, etc.) or if no modifications are needed, basis for that determination:

8. Did/will this corrective action require modification of your SWPPP? ☐ YES ☐ NO

9. Date corrective action initiated: __/__/____

10. Date correction action completed: __/__/____ or expected to be completed: __/__/____

11. If corrective action not yet completed, provide the status of corrective action at the time of the comprehensive site inspection and describe any remaining steps (including timeframes associated with each step) necessary to complete corrective action:

NPDES Permit Tracking No.:

E. ANNUAL REPORT CERTIFICATION

1. Compliance Certification

Do you certify that your annual inspection has met the requirements of Part 4.2 of the permit, and that, based upon the results of this inspection, to the best of your knowledge, you are in compliance with the permit? ☐ YES ☐ NO

If NO, summarize why you are not in compliance with the permit:

2. Annual Report Certification

I certify under penalty of law that this document and all attachments were prepared under my direction or supervision in accordance with a system designed to assure that qualified personnel properly gathered and evaluated the information submitted. Based on my inquiry of the person or persons who manage the system, or those persons directly responsible for gathering the information, the information submitted is, to the best of my knowledge and belief, true, accurate, and complete. I am aware that there are significant penalties for submitting false information, including the possibility of fine and imprisonment for knowing violations.

Authorized Representative Printed Name: Title:

Signature: Date Signed:

Harford County

Fallston

Parks & Recreation Maintenance Shop

Stormwater Pollution Prevention Plan

June 2023

Revised April 2024
Revised May 2025

Submitted by:

Harford County Government
Department of Parks & Recreation

Facility Operator:
Ron Griffin, Superintendent
Grounds Maintenance
rlgriffin@harfordcountymd.gov
(410) 638-3535 x7640

Facility Location:
1809 Fallston Road
Fallston, MD 21047

Robert G. Cassilly
Harford County Executive

Robert S. McCord
Director of Administration

Paul Magness
Director of Parks & Recreation

Terry Hanley
Deputy Director of Parks & Recreation

FOREWORD

The Harford County Department of Parks & Recreation and the Watershed Protection and Restoration Office have developed a Stormwater Pollution Prevention Plan, also known as the *Harford County Fallston Parks & Recreation Maintenance Shop Storm Water Pollution Prevention Plan.* This *Plan* was developed in accordance with the *General Permit For Discharges From Stormwater Associated With Industrial Activities (Discharge Permit No. 20-SW; NPDES Permit No. MDR0000)* as established by Maryland Department of the Environment, effective February 1, 2023. The *Plan* also satisfies those requirements established by the Maryland Department of the Environment's National Pollutant Discharge Elimination System (NPDES) MS4 permit.

The Department of Parks & Recreation and the Watershed Protection and Restoration Office shall review the *Harford County Fallston Parks & Recreation Maintenance Shop Storm Water Pollution Prevention Plan* at a minimum of every three (3) years. Should any of the following conditions listed below occur, the personnel shall revise and reissue the *Plan* to the appropriate individuals and the Maryland Department of the Environment (MDE):

- Applicable laws are revised;
- The *Plan* fails in an emergency; or
- The facility changes in design or operation which results in an increased potential for fires, explosions, or release of hazardous waste.

All revisions to the *Harford County Fallston Parks & Recreation Maintenance Shop Pollution Prevention Plan* shall be documented by providing the date and noting the section(s) which have been revised since its initial development.

Contents

SECTION 1: FACILITY DESCRIPTION AND CONTACT INFORMATION 4
1.1 Facility Information 4
1.2 Contact Information/Responsible Parties 5
1.3 Stormwater Pollution Prevention Team 6
1.4 Activities at the Facility 6
1.5 General Location Map 7
1.6 Site Map 8
SECTION 2: POTENTIAL POLLUTANT SOURCES 9
2.1 Industrial Activity and Associated Pollutants 9
2.2 Spills and Leaks 9
2.3 Non-Stormwater Discharges Documentation 9
2.4 Salt Storage 9
2.5 Visual Monitoring Summary 10
2.6 PFAS and PCB Source Identification 10
SECTION 3: STORMWATER CONTROL MEASURES 10
3.1 Minimize Exposure 10
3.2 Good Housekeeping 11
3.3 Maintenance 12
3.4 Spill Prevention and Response 13
3.5 Erosion and Sediment Controls 14
3.6 Management of Runoff 14
3.7 Salt Storage Piles or Piles Containing Salt 14
3.8 20-SW Sector-Specific Non-Numeric Effluent Limits 15
3.9 Employee Training 16
3.10 Non-Stormwater Discharges 17
3.11 Waste, Garbage and Floatable Debris 17
3.12 Dust Generation and Vehicle Tracking of Industrial Materials 17
SECTION 4: SCHEDULES AND PROCEDURES FOR MONITORING 18
SECTION 5: INSPECTIONS 19

SECTION 6: SWPPP CERTIFICATION 20
SECTION 7: SWPPP MODIFICATIONS 21
SWPPP ATTACHMENTS.....23

SECTION 1: FACILITY DESCRIPTION AND CONTACT INFORMATION

1.1 Facility Information

Name of Facility: Harford County Fallston Parks & Recreation Maintenance Shop
Address: 1809 Fallston Rd
City: Fallston State: Maryland ZIP Code: 21047
County: Harford
Permit Registration Number: 20SW2095 (Previous: 12SW2095)

Latitude/Longitude (Use decimal format)
Latitude: Longitude:
39.529256 º N (decimal) -76.435200º W (decimal)

Estimated area of industrial activity at site exposed to stormwater: 75.78 (acres)

Primary SIC Code or 2-letter Activity Code: 1611
(refer to Appendix A of the 20-SW)
Identify your applicable sector and subsector: Sector AD.a: Dept. of Public Works and Highway Maintenance Facilities

Name and 8-digit identifier of the receiving water body: Atkisson Reservoir; 02130703

Are any of your discharges directly into any segment of an "impaired" water? ☒ Yes ☐ No

If Yes, identify name of the impaired water (and segment, if applicable): Atkisson Reservoir

Identify the pollutant(s) causing the impairment: Sedimentation/siltation

For pollutants identified, which do you have reason to believe will be present in your discharge?

none

For pollutants identified, which have a completed TMDL? none

Do you discharge into a high quality receiving water designated as a Tier 2 water? ☒ Yes ☐ No

Do you discharge into a high quality receiving water designated as Use III or Use IV? ☒ Yes ☐ No

1.2 Contact Information/Responsible Parties

Facility Operator:
Name: Ron Griffin
Address: 1809 Fallston Rd
City, State, Zip Code: Fallston, MD 21047
Telephone Number: (410) 638-3535 X7640
Email address: rlgriffin@harfordcountymd.gov

Facility Owner:
Name: Harford County Government
Address: 220 S Main St
City, State, Zip Code: Bel Air, MD 21014
Telephone Number: (410) 879-2000
Email address: CountyExecutive@harfordcountymd.gov
Fax number: (410) 638-1387

SWPPP Contact:
Name: Richard Wise
Telephone number: (410) 638-3217 X2446
Email address: rhwise@harfordcountymd.gov
Fax number: (410) 879-8439

1.3 Stormwater Pollution Prevention Team

	NAME	TITLE	PHONE NUMBER	RESPONSIBILITIES
NPDES Program Manager	Danielle Hankins	Administrator	410-638-3217 X1176	Overseeing NPDES Program
Leader	Paul Magness	Director	410-638-3570	SWPPP Preparation Implementing BMPs Evaluating BMPs to measure effectiveness of plan
Member	Ron Griffin	Superintendent	410-638-3535 x7640	Overseeing activities occurring at the Fallston Parks & Rec Maintenance Shop Monitoring SWPPP Preparation Implementing BMPs Evaluating BMPs to measure effectiveness of plan
Member	Joshua Lemly	Superintendent	410-638-3535 x7638	Overseeing activities occurring at the Fallston Parks & Rec Maintenance Shop Monitoring Site Inspections Training/Documentation
Member	Steve Condax	Administrator	410-638-3535	Administrative Support
Member	Joan Carmen	Administrative Assistant	410-638-3535	Training Coordination Documentation
Member	Richard Wise	Watershed Restoration Specialist	410-638-3217 X2446	Site assessments Identification of pollutant sources and risks SWPPP Preparation

1.4 Activities at the Facility

The Fallston Maintenance Shop, located at 1809 Fallston Road, Fallston, MD 21047, is the primary maintenance facility for the Harford County Department of Parks and Recreation. The maintenance staff based at the site are responsible for the day-to-day maintenance of the Department's sites and building facilities. The site also serves as one of Harford County's fueling locations. Many of the Department's maintenance vehicles and equipment, including trucks, lawnmowers, tractors and trailers, are stored at the site.

In addition to vehicle storage, maintenance and fueling facilities, the Fallston Maintenance Shop also serves as a storage facility of materials needed for basic maintenance of the equipment, including anti-freeze, oil, and grease. Prior to being used on equipment, these materials are stored indoors and are not exposed to stormwater. All equipment maintenance is conducted under cover, thus minimizing the chance of exposure to stormwater run-off. Waste oil is stored in an above ground storage tank situated within a secondary containment until it is removed off-site by a certified hauler. The wash bay has been converted to additional storage space and the wash water system has been removed. The overall design of this facility ensures that best management practices currently exist to eliminate and/or reduce the impact of potential pollutant sources should they enter stormwater.

1.5 General Location Map

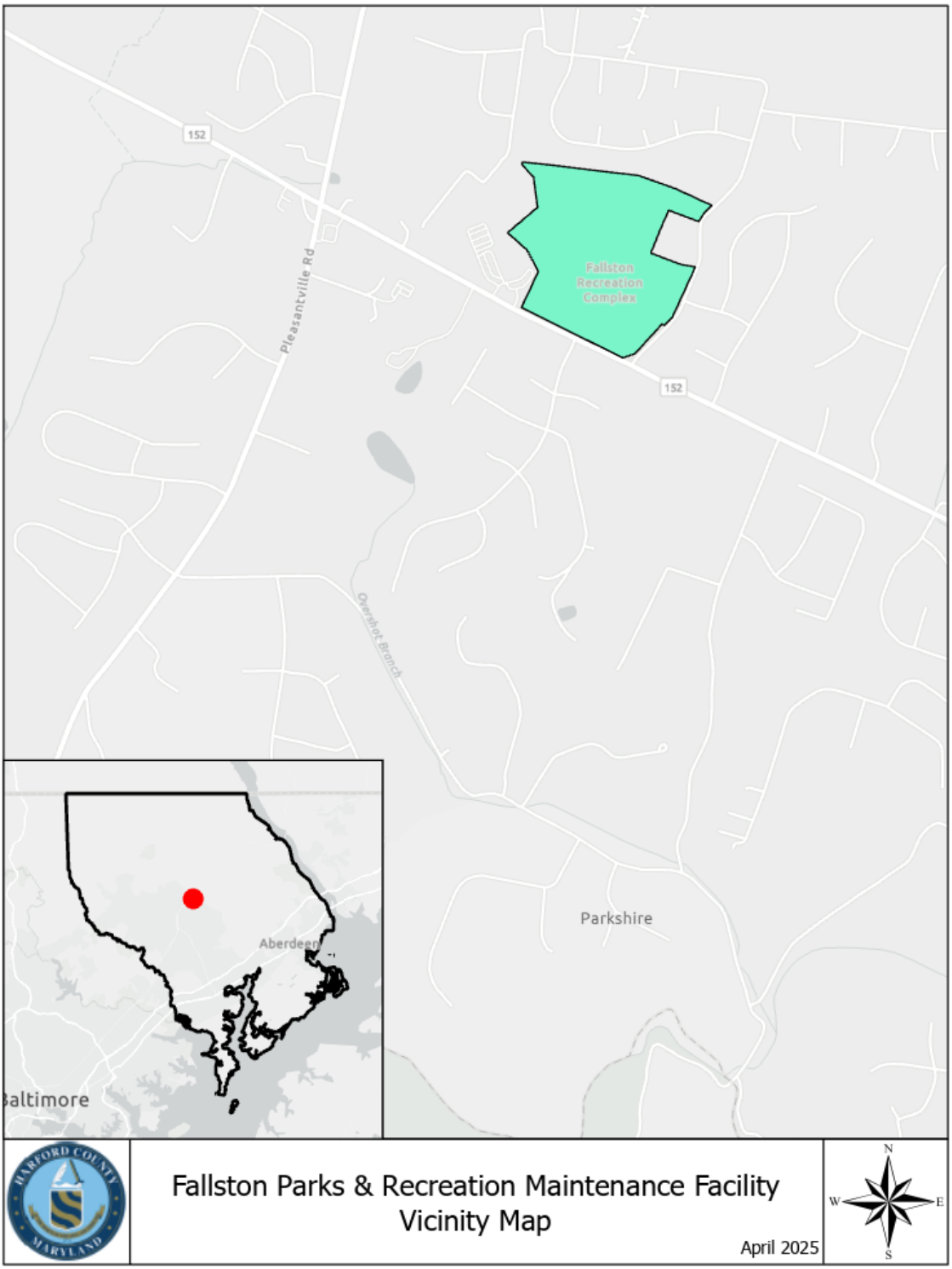

1.6 Site Map

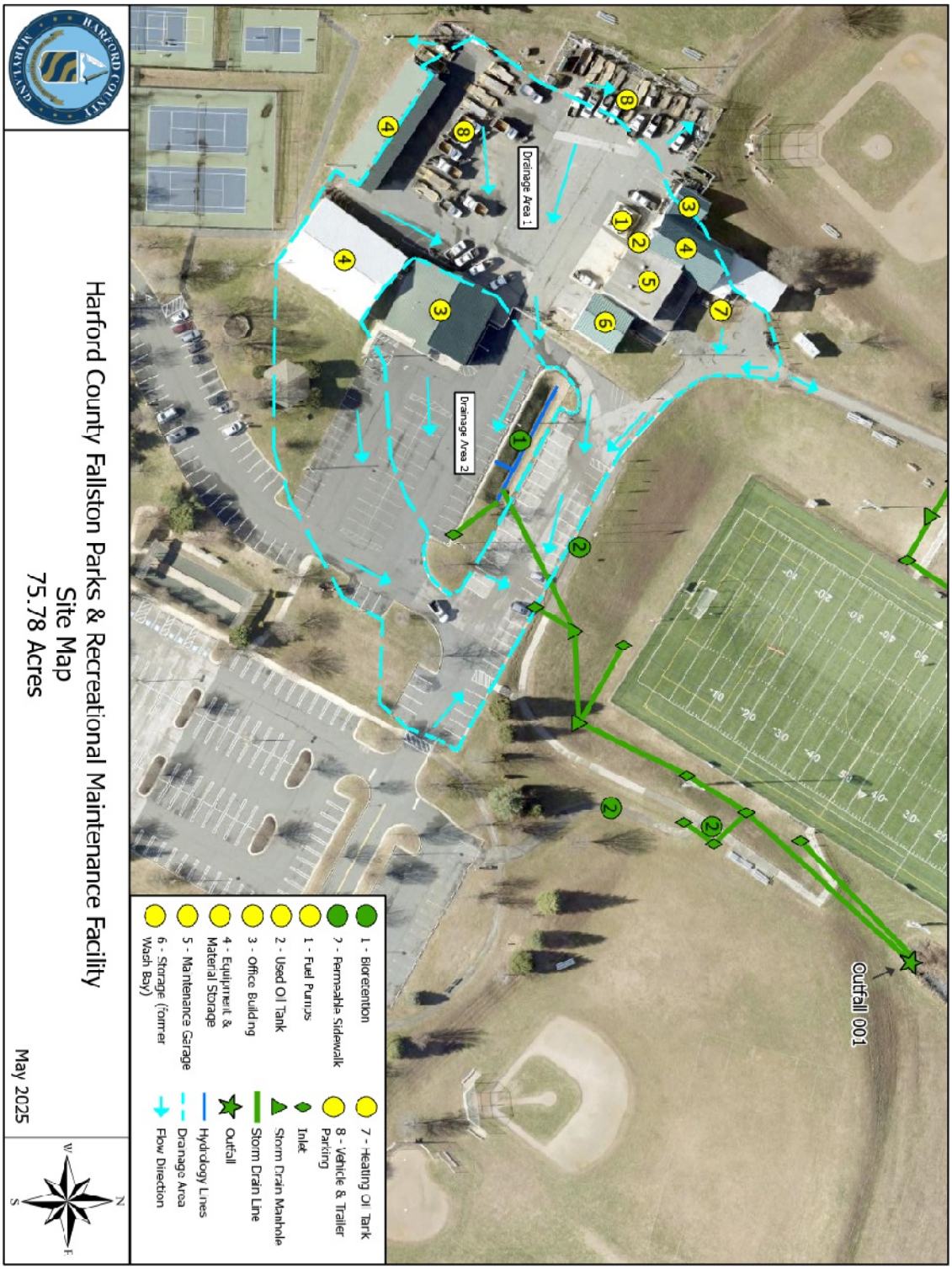
Harford County Fallston Parks & Recreational Maintenance Facility
Site Map
75.78 Acres
May 2025
Drainage Area 1
Drainage Area 2
Outfall 001
1 - Bioretention
2 - Used Oil Tank
3 - Office Building
4 - Equipment & Material Storage
5 - Maintenance Garage
6 - Storage (former Wash Bay)
7 - Heating Oil Tank
8 - Vehicle & Trailer Parking
Inlet
Storm Drain Manhole
Storm Drain Line
Outfall
Hydrology Lines
Drainage Area
Flow Direction

SECTION 2: POTENTIAL POLLUTANT SOURCES

2.1 Industrial Activity and Associated Pollutants

Industrial Activity	Associated Pollutants
Equipment maintenance	Antifreeze, motor oil, grease, lubricant
Vehicle and trailer parking	Road salt, road grime, sediment, antifreeze, oil, hydraulic fluid
Spot painting of vehicles	Paint
Storage of used materials for recycling	Used motor oil
Storage of pesticides and herbicides	Pesticides and herbicides
Above ground fueling station	Gasoline and diesel fuel
Heating oil tank	Heating oil

2.2 Spills and Leaks

Areas of Site Where Potential Spills/Leaks Could Occur

Location	Outfalls
Fueling station	Overland flow
Maintenance garage	Overland flow
Parking lot	Overland flow
Heating oil tank	Overland flow

Description of Past Spills/Leaks

Date	Description	Outfalls
	none	

2.3 Non-Stormwater Discharges Documentation

Date	Method	Discharge noted	Corrective Action
	None	none	none

2.4 Salt Storage

Bagged salt is stored indoors.

2.5 Visual Monitoring Summary

Quarterly visual inspections were completed during the last permit period.

2.6 PFAS and PCB Source Identification

There are no known sources of PFAS or PCB at the Fallston P&R Maintenance Facility.

SECTION 3: STORMWATER CONTROL MEASURES

3.1 Minimize Exposure

Covered Storage Areas

Used oil is stored in an above ground storage tank situated within a secondary containment area until it is picked up by a certified hauler. Ball diamond mix and topsoil are stored under cover to minimize runoff.

Indoor Storage Areas

Storage of materials used for various operations such as equipment maintenance and road painting in containers and/or in environments that are not susceptible to storm water exposure.

Material	Purpose and/or Location	Quantity Stored (Maximum)	Likelihood of contact with storm water.
Antifreeze	Used for equipment.	150 Gallons	There is no likelihood of antifreeze encountering storm water since it is stored in containers under cover.
Grease	Used for lubrication of equipment.	50 Pounds	There is no likelihood of grease encountering storm water since all lubrication of equipment occurs indoors.
Motor Oil	Used for equipment.	150 Gallons	There is no likelihood of motor oil encountering storm water since its usage occurs indoors.
Used Motor Oil	Stored for recycling	375 Gallons	There is a minimal likelihood of used motor oil encountering storm water. Used motor oil is stored in an above ground tank situated within a secondary containment area.
Paint	Used for maintenance purposes.	15 Gallons	There is no likelihood of paint encountering storm water since the application of paint occurs in dry conditions and dries in minutes.
Herbicides	Used for weed control	20 Gallons	There is a minimal likelihood that pesticides and herbicides will encounter storm water. The utilization of pesticides and herbicides is under controlled conditions and utilizes Best Management Practices resulting in little or no exposure to storm water.
Gasoline (Above Ground Storage Tank)	Used for vehicles and equipment	3,000 Gallons	There is a minimal likelihood of gasoline encountering storm water. Gasoline is stored in a double-walled above ground storage tank. A spill kit is in proximity.
Diesel (Above Ground Storage Tank)	Used for vehicles and equipment	3,000 gallons	There is a minimal likelihood of gasoline encountering storm water. Diesel is stored in a double-walled above ground storage tank. A spill kit is in proximity.
Heating Oil	Used for building heat	1,000 gallons	There is a minimal likelihood of heating oil encounter storm water. Heating oil is stored in an above ground storage tank.

3.2 Good Housekeeping

The Fallston Parks & Recreation Maintenance Shop has implemented the following good housekeeping measures listed below:

Operation and Maintenance

- Maintain dry and clean floors and ground surfaces by using brooms, shovels, vacuum cleaners, or cleaning machines.
- Regularly pick up and dispose of garbage and waste material.
- Make sure equipment is working properly.
- Routinely inspect for leaks or conditions that could lead to discharges of chemicals or contact of storm water with raw materials, intermediate materials, waste materials, or products.
- Make sure outside areas are kept in a neat and orderly condition.
- Implement weekly housekeeping inspections.
- Ensure that spill cleanup procedures are understood by employees.

Material Storage Practices

- Provide adequate aisle space to facilitate material transfer and easy access for inspections.
- Store containers, drums, and bags away from direct traffic routes to prevent accidental spills.
- Stack containers according to manufacturers' instructions to avoid damaging the containers from improper weight distribution.
- Store containers on pallets or similar devices to prevent corrosion of the containers due to contact with moisture on the ground.
- Assign the responsibility of hazardous material inventory to a limited number of people who are trained to handle hazardous materials.

Material Inventory Procedures

- Identify all chemical substances present in the workplace.
- Label all containers to show the name and type of substance, stock number, expiration date, health hazards, suggestions for handling, and first aid information.
- Clearly mark on the inventory hazardous materials that require special handling, storage, use, and disposal considerations.
- Ensure storage areas are designed to contain spills.
- Implement a shelf-life program which can reduce waste that results from overstocking and allows for the disposal of outdated materials.

Employee Participation

- Incorporate information sessions on good housekeeping practices into the facility's employee training program.
- Discuss good housekeeping at employee meetings.
- Post bulletin boards with updated good housekeeping procedures, tips, and reminders.

3.3 Maintenance

The Fallston Parks & Recreation Maintenance Shop has implemented the following Preventative Maintenance measures and conducts inspections as noted below.

Bioretention Facility

- Maintenance of the bioretention facility shall consist of replacing mulch and soil in any areas that have experienced erosion or washout.
- Dead plant material shall be removed, and plant material shall be inspected and pruned as necessary on a biannual basis.
- Soil erosion shall be addressed on an as-needed basis.

Vegetative Areas

- Personnel shall conduct inspections of the permanent vegetative areas around the perimeter of the facility to determine if repairs, replacements and reseedings are necessary.

Pervious Sidewalk

- Maintenance of the pervious sidewalk shall consist of avoiding the use of impervious materials to seal or repave the sidewalk.
- Visually inspect the pervious sidewalk to ensure it is free of debris and sediments remove accumulated sediments by blowing, sweeping or vacuuming.
- On a monthly basis, the upland and adjacent grassy areas shall be maintained, and bare areas shall be seeded.
- Excessive water flow carrying debris toward the pavement should be diverted as needed.
- On an annual basis, the surface of the pervious sidewalk shall be inspected for deterioration or spalling.

Employee Participation

- Schedule monthly Maintenance Inspections.
- Implement a schedule to adjust, repair, or replace equipment or systems in a regular or timely manner.
- Promptly repair defective equipment found during inspections and testing.
- Inspect and test facility equipment and systems to uncover conditions that could cause breakdowns or failures resulting in discharges of pollutants to surface waters.
- Maintain records on Preventive Maintenance inspections.

3.4 Spill Prevention and Response

Within the Fallston Parks & Recreation Maintenance Shop, the areas identified most susceptible to a spill were the fueling and oil recycling areas. Spill clean-up kits are available in these areas to absorb and properly dispose of spilled materials.

Preventive measures implemented by Harford County to improve material handling procedures and storage include the following:

- Adopting effective housekeeping practices.
- Performing regular visual inspections to identify signs of wear on storage containers, equipment, etc..
- Performing preventive maintenance on equipment, tanks, etc..
- Using filling procedures for tanks and other equipment to minimize spills.
- Using material transfer procedures that reduce the chance of leaks or spills.
- Substituting less or non-toxic materials for toxic materials.
- Ensuring appropriate security.
- Developing ways to recycle, clean, and/or reuse process materials to reduce the volume brought into the facility.
- Parks & Recreation is investigating the feasibility of installing leak detection devices and overflow controls, and diversion berms.

In the event of a spill, staff will follow the procedures listed below:

1. Identify the material, the source, and approximate quantity.
2. Attend to any individuals who are injured and contact 911 for further assistance if necessary.
3. Evaluate the potential for fires, explosions, etc.
4. If possible, stop the release to prevent the situation from worsening.
5. Contain the spill using pads, berms, ditches, etc.
6. Evaluate if the situation is an immediate threat to the life or health of fellow employees.
7. If the material has a Reportable Quantity (RQ) Requirement and the spill was in excess of the RQ amount, contact Emergency Response Agencies.
8. Prevent other humans or vehicles from coming into contact with the spill by sectioning off the area, posting a sign, or having someone guard the area.
9. Organize those individuals responsible for spill cleanup, review the situation with them, any hazards they may encounter, and ensure they are using proper equipment, protective clothing, following proper clean up, decontamination, and disposal procedures.
10. Dispose of contaminated absorbents and other supplies properly and decontaminate any equipment used in the clean-up process and dispose of contaminated absorbents and other supplies properly.

Harford County shall, after any spill, evaluate the Response Plan and make any necessary improvements to the Plan.

3.5 Erosion and Sediment Controls

Harford County maintains vegetative buffers and a bio-retention area to limit erosion at the Fallston Parks & Recreation Maintenance Facility. Harford County's Department of Public Works Storm Water Management staff conducts annual inspections to ensure proper maintenance of controls.

3.6 Management of Runoff

The following best management practices are installed at the Fallston Parks & Recreation Maintenance Facility:

Bioretention Facility

This bioretention facility treats 100% of the required WQv.

Vegetative Areas

Vegetated areas receive overland runoff from the storage buildings, offices and parking areas.

These facilities are inspected triennially as required by the County and MDE. Inspection reports are available from the County.

3.7 Salt Storage Piles or Piles Containing Salt

Not applicable. Only bagged salt is stored.

3.8 20-SW Sector-Specific Non-Numeric Effluent Limits

Within Sector AD.a. Department of Public Works and Highways Maintenance Facilities, the Specific Non-Numeric Effluent Limits are described in Sector P Transportation and Warehousing.

P.3 Additional Technology-Based Effluent Limits.

P.3.1 Good Housekeeping Measures

P.3.1.1 Vehicle and Equipment Storage Areas

P.3.1.2 Fueling Areas

The fueling area is covered to minimize exposure to stormwater. Spills are handled as described in Item 3.4 above.

P.3.1.3 Material Storage Areas

The material storage areas are handled as described in Item 3.2 above.

P.3.1.4 Vehicle and Equipment Cleaning Areas

P.3.1.5 Vehicle and Equipment Maintenance Areas

P.3.1.6 Locomotive Sanding

Not applicable.

P.3.2 Employee Training

P.4 Additional SWPPP Requirements

P.4.1 Drainage Area Site Map

The site map is provided in Section 1.6 above.

P.4.2 Potential Pollutant Sources

Potential Pollutant Sources are described in Items 2.1 and 2.2 above.

P.4.3 Description of Good Housekeeping Measures

Good Housekeeping Measures are described in Section 3.2 above.

P.5 Additional Inspection Requirements

Inspection procedures are described in Sections 3.2 and 3.3 above.

3.9 Employee Training

Fallston Parks & Recreation Maintenance Shop conducts the employee training programs described below and makes modifications as necessary to ensure all employees are properly educated of all measures contained in the pollution prevention plan. Employee training records shall be kept on file at the Abingdon Highways Maintenance Facility.

TRAINING TOPICS	BRIEF DESCRIPTION OF TRAINING PROGRAM / MATERIALS	SCHEDULE FOR TRAINING (LIST DATES)	ATTENDEES
SPILL PREVENTION AND RESPONSE Identifying potential spill areas and drainage routes; Procedures for reporting spills; Appropriate material handling procedures and storage requirements; Implementing spill response procedures	Videos and Posted Notices	Routine training to be conducted by Parks & Recreation staff	All shop employees
GOOD HOUSEKEEPING Regular vacuuming and/or sweeping; Prompt cleanup of spilled materials to prevent pollution run-off; Identify where brooms, vacuums, sorbents, foams, neutralizing agents, and other good housekeeping and spill response equipment are located; Instruction on securing drums and containers and frequently checking for leaks and spills; Outline a regular schedule for housekeeping activities	Safety Training Meetings	Monthly	All shop employees
MATERIAL MANAGEMENT PRACTICES Organize materials for storage; Identify all toxic and hazardous substances stored and handled onsite; Discuss handling procedures for all toxic and hazardous materials	Briefings	Monthly	All shop employees

3.10 Non-Stormwater Discharges

Non-stormwater discharges are addressed as described in Section 2.3 above.

3.11 Waste, Garbage and Floatable Debris

Waste, Garbage and Floatable Debris are addressed in Section 3.2 above.

3.12 Dust Generation and Vehicle Tracking of Industrial Materials

Good housekeeping measures on paved surfaces are employed to minimize dust generation.

SECTION 4: SCHEDULES AND PROCEDURES FOR MONITORING

Fallston Parks & Recreation Maintenance Shop does not have Benchmark Monitoring Requirements as described for Sector AD.a *Department of Public Works and Highways Maintenance Facilities***.** Stormwater from the Fallston Parks & Recreation Maintenance Shop discharges to Bread and Cheese Branch, a tributary of Winters Run, and ultimately to Atkisson Reservoir. A Category 5 impairment for 1st - 4th order streams in Atkisson Reservoir was first described in 1996 for sedimentation and in 2002 for fish and benthic IBIs. The pollutant source is unknown and no TMDL has been established. Therefore, impaired waters monitoring is not required.

Location	Frequency	Method	Responsible Person
Outfall 001	**Quarterly**	**Visual evaluation**	**Superintendent/Administrator**

Once per quarter, a stormwater sample must be collected from each outfall in such a manner that they are representative of the stormwater discharge from that outfall. A quality storm event is any storm where there is measurable discharge. The sample(s) shall be collected in a colorless glass or plastic container and visually examined for the parameters listed on the Quarterly Visual Monitoring Form (Attachment D). The Quarterly Visual Monitoring Form shall be signed and dated by the person conducting the visual examination. A copy of the completed Quarterly Visual Monitoring Form shall be kept with the facility's SWPPP and be available when requested.

Should there be any indication of a pollutant, an inspection will be performed to determine the source of the pollutant and corrective actions will be taken to remove the source.

SECTION 5: INSPECTIONS

In addition to the quarterly visual monitoring of stormwater discharge, routine site inspections will be performed as described in Sections 3.2 and 3.3 above on a quarterly basis as required by the county's 20-SW permit. Annually, a comprehensive site evaluation (Attachment E) will be performed by qualified personnel. This inspection will include the following elements:

- Inspect storm water drainage areas for evidence of pollutants entering the drainage system.
- Evaluate the effectiveness of measures to reduce pollutant loadings and whether additional measures are needed.
- Observe structural measures, sediment controls, and other storm water BMPs to ensure proper operation.
- Inspect any equipment needed to implement the plan, such as spill response equipment.
- Revise the plan as needed within two weeks of inspection (potential pollutant source description and description of measures and controls).
- Implement any necessary changes in a timely manner, but at least within 12 weeks of the inspection.
- Prepare a report summarizing inspection results and follow up actions, the date of inspection and personnel who conducted the inspection; identify any incidents of non-compliance or certify that the facility is in compliance with the plan.
- Document all incidents of non-compliance in the inspection report. Where there are no incidents of non-compliance, the inspection report must contain a certification that the facility is in compliance with the plan.
- Sign the report and submit it with the plan.

SECTION 6: SWPPP CERTIFICATION

I certify under penalty of law that this document and all attachments were prepared under my direction or supervision in accordance with a system designed to assure that qualified personnel properly gathered and evaluated the information submitted. Based on my inquiry of the person or persons who manage the system, or those persons directly responsible for gathering the information, the information submitted is, to the best of my knowledge and belief, true, accurate, and complete. I am aware that there are significant penalties for submitting false information, including the possibility of fine and imprisonment for knowing violations.

Name: Danielle Hankins Title: Administrator

Signature: Danielle M Hankins
I am approving this document
2025.05.27 15:09:52-04'00' Date: 05.27.2025

SECTION 7: SWPPP MODIFICATIONS

Original Completion Date: June 2023

Revision Date: April 2024

Revisions:

- Section 1.1 Facility Information
- Section 1.3 Stormwater Pollution Prevention Team
- Section 2.5 Visual Monitoring Summary

Revision Date: April 2025

Revisions:

- Overall reformatting and grammar corrections
- Section 1.2 Contact Information/Responsible Parties
  - Removed Assistant Facility Operator
  - Updated SWPPP Contact
- Section 1.3 Stormwater Pollution Prevention Team
  - Updated Administrator
  - Updated Watershed Restoration Specialist
- Section 1.4 Activities at the Facility
  - Waste antifreeze no longer collected or stored at facility
- Section 1.5 General Location Map
  - Updated General Location Map
- Section 1.6 Site Map
  - Revised drainage areas
  - Removed wash bay OWS
  - Revised labels for BMPs
  - Revised labels for possible pollutant sources
  - Updated locations of inlets
  - Added storm drain line
  - Added storm drain manholes
  - Added heating oil tank
  - Added vehicle and trailer parking
- Section 2.1 Industrial Activity and Associated Pollutants
  - Removed antifreeze as associated pollutant
  - Replaced vehicle and equipment washing with vehicle and trailer parking
  - Added heating oil
- Section 2.2 Spills and Leaks

    - Removed wash bay
    - Added parking lot
    - Added heating oil tank
- Section 3.1 Minimize Exposure
    - Removed column for Quantity Used
    - Updated column for Quantity Stored to represent the maximum amount of product to be stored at any given time
    - Removed used antifreeze
    - Separated gasoline and diesel fuel
    - Added heating oil
- Section 4 Scheduled and Procedures for Monitoring
    - Updated outfall identification listed in table
    - Revised language regarding the collection of the quarterly visual monitoring samples
- SWPPP Attachments
    - Updated Attachment A – General Location Map included as an 11”x17” map
    - Updated Attachment B – Site Map included as an 11”x17” map
    - Included Attachment C – Quarterly Visual Monitoring Form
    - Included Attachment E – EPA Annual Reporting Form

SWPPP ATTACHMENTS

Attachment A – General Location Map

Attachment B – Site Map

Attachment C – General Permit 20-SW

Attachment D – Quarterly Visual Monitoring Form

Attachment E – EPA Annual Reporting Form

Attachment A – General Location Map

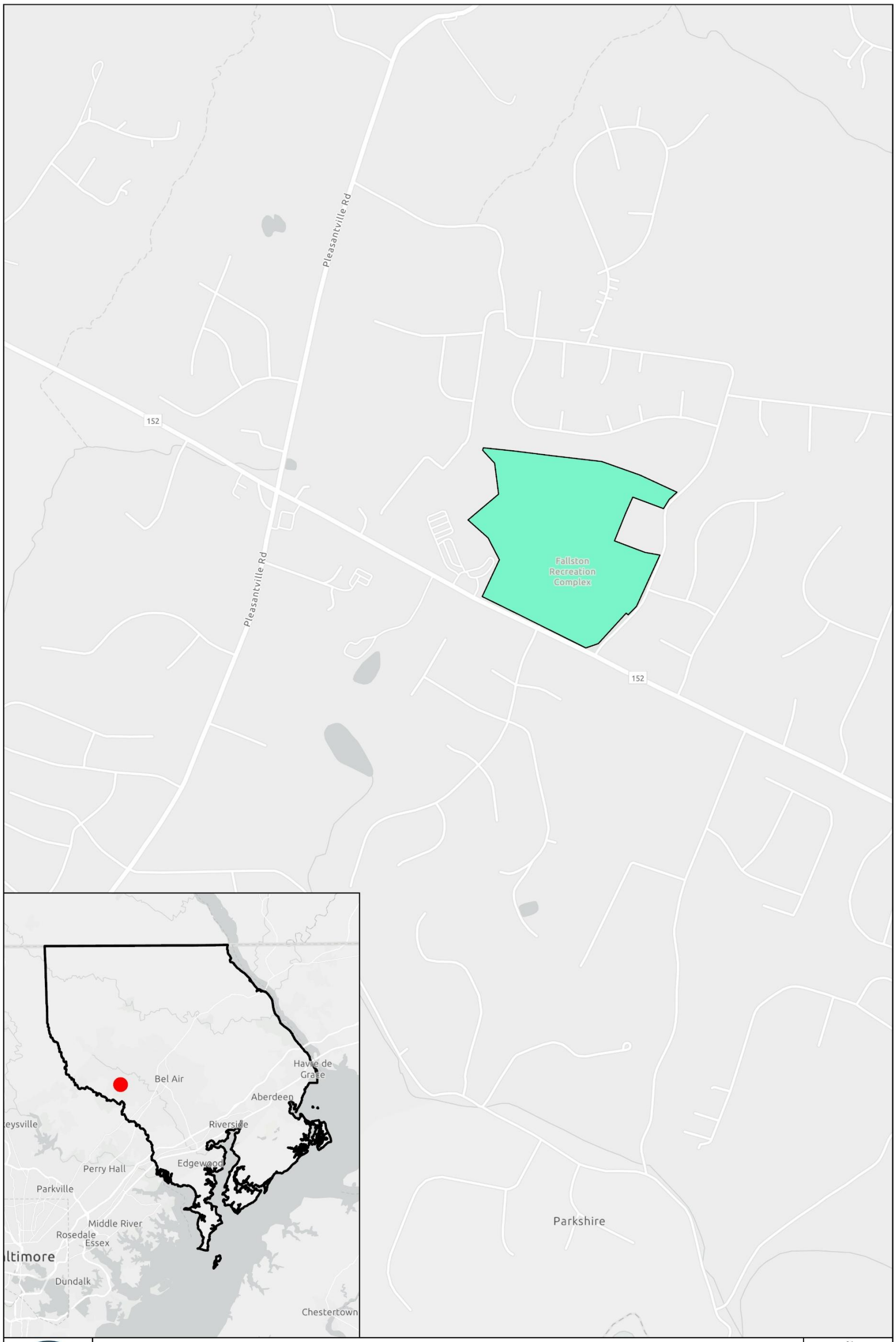

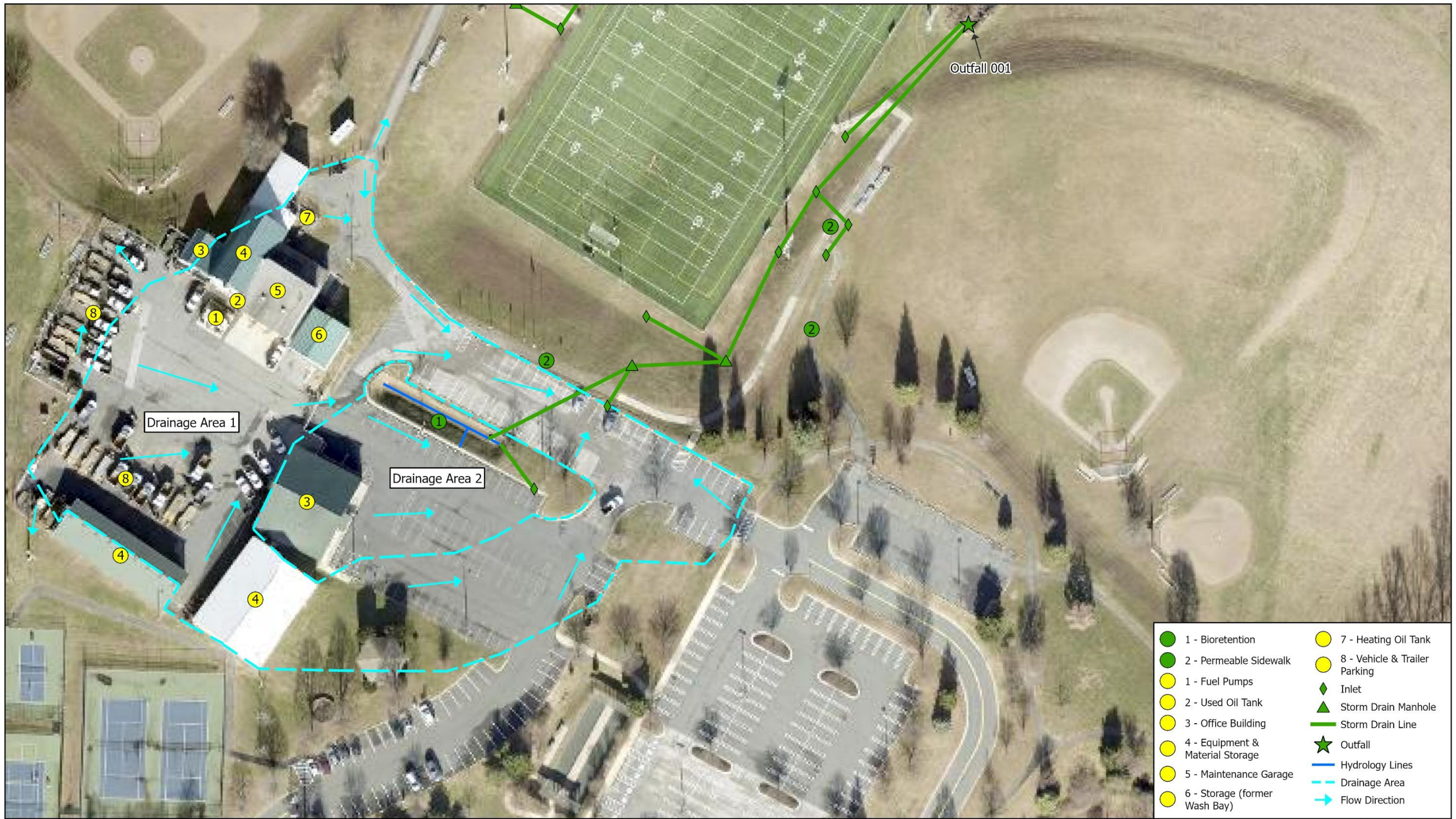

Harford County Fallston Parks & Recreational Maintenance Facility
Site Map
75.78 Acres

May 2025

N
W
E
S

Attachment B – Site Map

Attachment C – General Permit 20-SW

Attachment D – Quarterly Visual Monitoring Form

Quarterly Visual Monitoring Form

Fill out a separate form for each outfall sampled.

Sample Location					
Quarter / Year:		**Date / Time Collected:**		**Date / Time Examined:**	
Qualifying Storm Event?	Yes No	**Runoff Source:**	Rainfall Snowmelt		
Collector's Name & Title					
Examiner's Name & Title					

Parameter	Parameter Description	Parameter Characteristics
1. Color	Does the stormwater appear to have any color? **Yes** **No (Clear)**	If Yes, describe: *Yellow* *Brown* *Red* *Gray* *Other*:
2. Clarity	Is the stormwater not clear? **Yes** **No**	If not clear, which of the following best describes the clarity of the stormwater? *Suspended Solids* *Milky/Cloudy* *Opaque* *Other :*
3. Oil Sheen	Can you see a rainbow effect or sheen on the water surface? **Yes** **No**	Which best describes the sheen? *Rainbow sheet* *Floating oil globules* *Other :*
4. Odor	Does the sample have an odor? **Yes** **No**	If Yes, describe: *Chemical* *Musty* *Rotten Eggs* *Sewage* *Sour Milk* *Oil/Petroleum* *Other :*
5. Floating Solids	Is there anything on the surface of the sample? **Yes** **No**	If Yes, describe: *Suds* *Oily Film* *Garbage* *Sewage* *Water Fowl Excrement* *Other :*
6. Suspended Solids	Is there anything suspended in the sample? **Yes** **No**	Describe:
******Leave sample undisturbed for 30 minutes.******		
7. Settled Solids	Is there anything settled on the bottom of the sample? **Yes** **No**	Describe: (*note type, size and material after sample is not disturbed for 30 minutes)*
8. Foam	Does foam or material form on the top of the sample surface if you shake it? **Yes** **No**	Describe:

9. If there are any visible indicators of pollution identify (1) where the pollution may come from and (2) any corrective actions taken.

Stormwater Collector's Signature and Date:

Stormwater Examiner's Signature and Date:

Note – Sample should be collected and analyzed in a colorless glass or plastic bottle.

Instructions for Completing the Visual Monitoring Form

Per PART V. INSPECTIONS, MONITORING, AND REPORTING, you must collect a stormwater sample from each outfall once each quarter for the entire permit term and conduct a visual assessment of each sample. You must follow the monitoring procedures outlined in Part V.C. These samples should be collected in such a manner that they are representative of the stormwater discharge from that outfall. Each assessment must be kept onsite with your SWPPP and available for inspection and review by the Department at anytime.

First, fill out all information on the top of the visual monitoring form. A qualifying storm event is any storm where there is a measurable discharge. Then, take a grab sample in a clear container. Evaluate the sample in a well-lit area for the following parameters:

1. **Color:** Record the best description of the sample color in the appropriate space on the form.
2. **Clarity**: This parameter refers to how cloudy the sample is. It is *usually* an indication of fewer pollutants in the water if the sample is clear or transparent. If the clarity has changed since the last sample, try to identify what might have caused this to happen.
   - **Clear** – Sample doesn't block any light; can be seen through regardless of color.
   - **Cloudy** – Sample blocks some light; objects not clear but can be identified looking through the sample.
   - **Very Cloudy** – Sample blocks most light; objects cannot be identified looking through the sample.
   - **Opaque** – Sample blocks all light; objects cannot be seen when looking through the sample.
3. **Oil Sheen:** Record whether or not an oil sheen is present. If a film of iridescent color is noted on the surface of the sample or a rainbow effect appears to be floating on the surface of the water, this usually indicates oil is present.
4. **Odor:** If sample has no odor other than natural rainwater or snowmelt, write "NO" on the visual monitoring form. Note the presence of any of the following odors if detected, such as gasoline, diesel, oil, solvents (WD-40, other petroleum products, etc.), garbage, fishy, sweet/sugary, any other unusual odors not normally present in clean runoff from the area sampled.
5. **Floating Solids:** A contaminated flow may contain solids or liquids floating on the surface. Identifying floatables can aid in finding the source of the contamination. Examples of floatables are spoiled food products, oils, plant parts, solvents, sawdust, foams and fuel. Give a general description of the type of floating solids present (wood chips, leaf debris, algae, etc) in the general comments section for each sample. Identify amount of floating solids as described below.
   - **High** – More than 20% of the surface of the sample is covered with floating solids.
   - **Moderate** – Less than 20% of the surface of the sample is covered with floating solids.
   - **Slight** – Only a few floating particles observed on the surface of the sample.
   - **None** – No floating solids present on the surface of the sample.
6. **Suspended solids:** Record whether or not suspended solids are present in the sample. Suspended solids are particles floating inside the column of water, not on top, and may contribute to changes in water color or clarity. Cracked or deteriorated concrete or peeling surface paint at an outfall usually indicates the presence of severely contaminated discharges. Contaminants causing this type of damage are usually very acidic or basic.

---------- WAIT 30 MINUTES ----------

Leave the sample undisturbed for 30 minutes to allow the water and anything in it to settle.

7. **Settled Solids:** After 30 minutes has passed, give a general description of the type of settled solids present (sand, decayed plant matter, rust particles, etc.) in the general comments section.
8. **Foam:** After completing #7, shake the bottle gently. Record foam results on the form as they most closely match one of the descriptions listed below.
   - **None** – Most bubbles break down within ten (10) seconds of shaking; only a few large bubbles persist longer than ten (10) seconds.
   - **Moderate** – Many small bubbles are present but these bubbles persist for less than two (minutes) after shaking.
   - **High** – Many small bubbles are present and they persist longer than two (2) minutes after shaking.
9. Detail any concerns, corrective actions taken and any other indicators of pollution present in the sample. This should include the identified source if there are visible indicators present in the sample. The person performing test must sign and date each form**.**

Attachment E – EPA Annual Reporting Form

NPDES Permit Tracking No.:

UNITED STATES ENVIRONMENTAL PROTECTION AGENCY
WASHINGTON, DC 20460

Annual Reporting Form

A. GENERAL INFORMATION

1. Facility Name:

2. NPDES Permit Tracking No.:

3. Facility Physical Address:

a. Street:

b. City: c. State: d. Zip Code: -

4. Lead Inspectors Name: Title:

Additional Inspectors Name(s):

5. Contact Person: Title:

Phone: - - Ext. E-mail:

6. Inspection Date : / /

B. GENERAL INSPECTION FINDINGS

1. As part of this comprehensive site inspection, did you inspect all potential pollutant sources, including areas where industrial activity may be exposed to stormwater?
☐ YES ☐ NO

If NO, describe why not:

NOTE: *Complete Section C of this form for each industrial activity area inspected and included in your SWPPP or as newly identified in B.2 or B.3 below where pollutants may be exposed to stormwater.*

2. Did this inspection identify any stormwater or non-stormwater outfalls not previously identified in your SWPPP? ☐ YES ☐ NO

If YES, for each location, describe the sources of those stormwater and non-stormwater discharges and any associated control measures in place:

NPDES Permit Tracking No.:

3. Did this inspection identify any sources of stormwater or non-stormwater discharges not previously identified in your SWPPP? ☐ YES ☐ NO

If YES, describe these sources of stormwater or non-stormwater pollutants expected to be present in these discharges, and any control measures in place:

4. Did you review stormwater monitoring data as part of this inspection to identify potential pollutant hot spots? ☐ YES ☐ NO ☐ NA, no monitoring performed

If YES, summarize the findings of that review and describe any additional inspection activities resulting from this review:

5. Describe any evidence of pollutants entering the drainage system or discharging to surface waters, and the condition of and around outfalls, including flow dissipation measures to prevent scouring:

6. Have you taken or do you plan to take any corrective actions, as specified in Part 3 of the permit, since your last annual report submission (or since you received authorization to discharge under this permit if this is your first annual report), including any corrective actions identified as a result of this annual comprehensive site inspection?

☐ YES ☐ NO

If YES, how many conditions requiring review for correction action as specified in Parts 3.1 and 3.2 were addressed by these corrective actions? ☐☐

NOTE: *Complete the attached Corrective Action Form (Section D) for each condition identified, including any conditions identified as a result of this comprehensive stormwater inspection.*

NPDES Permit Tracking No.:

C. INDUSTRIAL ACTIVITY AREA SPECIFIC FINDINGS

Complete one block for each industrial activity area where pollutants may be exposed to stormwater. Copy this page for additional industrial activity areas.

In reviewing each area, you should consider:

- Industrial materials, residue, or trash that may have or could come into contact with stormwater;
- Leaks or spills from industrial equipment, drums, tanks, and other containers;
- Offsite tracking of industrial or waste materials from areas of no exposure to exposed areas; and
- Tracking or blowing of raw, final, or waste materials from areas of no exposure to exposed areas.

INDUSTRIAL ACTIVITY AREA _____:

1. Brief Description**:**

2. Are any control measures in need of maintenance or repair? ☐ YES ☐ NO

3. Have any control measures failed and require replacement? ☐ YES ☐ NO

4. Are any additional/revised control measures necessary in this area? ☐ YES ☐ NO

If YES to any of these three questions, provide a description of the problem: (Any necessary corrective actions should be described on the attached Corrective Action Form)

INDUSTRIAL ACTIVITY AREA _____:

1. Brief Description:

2. Are any control measures in need of maintenance or repair? ☐ YES ☐ NO

3. Have any control measures failed and require replacement? ☐ YES ☐ NO

4. Are any additional/revised c necessary in this area? ☐ YES ☐ NO

If YES to any of these three questions, provide a description of the problem: (Any necessary corrective actions should be described on the attached Corrective Action Form)

INDUSTRIAL ACTIVITY AREA _____:

Brief Description:

2. Are any control measures in need of maintenance or repair? ☐ YES ☐ NO

3. Have any control measures failed and require replacement? ☐ YES ☐ NO

4. Are any additional/revised BMPs necessary in this area? ☐ YES ☐ NO

If YES to any of these three questions, provide a description of the problem: (Any necessary corrective actions should be described on the attached Corrective Action Form)

NPDES Permit Tracking No.:

NOTE: *Copy this page and attach additional pages as necessary*

INDUSTRIAL ACTIVITY AREA _____:

1. Brief Description:

2. Are any control measures in need of maintenance or repair? ☐ YES ☐ NO

3. Have any control measures failed and require replacement? ☐ YES ☐ NO

4. Are any additional/revised BMPs necessary in this area? ☐ YES ☐ NO

If YES to any of these three questions, provide a description of the problem: (Any necessary corrective actions should be described on the attached Corrective Action Form)

INDUSTRIAL ACTIVITY AREA _____:

1. Brief Description:

2. Are any control measures in need of maintenance or repair? ☐ YES ☐ NO

3. Have any control measures failed and require replacement? ☐ YES ☐ NO

4. Are any additional/revised BMPs necessary in this area? ☐ YES ☐ NO

If YES to any of these three questions, provide a description of the problem: (Any necessary corrective actions should be described on the attached Corrective Action Form)

INDUSTRIAL ACTIVITY AREA _____:

1. Brief Description:

2. Are any control measures in need of maintenance or repair? ☐ YES ☐ NO

3. Have any control measures failed and require replacement? ☐ YES ☐ NO

4. Are any additional/revised BMPs necessary in this area? ☐ YES ☐ NO

If YES to any of these three questions, provide a description of the problem: (Any necessary corrective actions should be described on the attached Corrective Action Form)

NPDES Permit Tracking No.:

D. CORRECTIVE ACTIONS

Complete this page for each specific condition requiring a corrective action or a review determining that no corrective action is needed. Copy this page for additional corrective actions or reviews.

Include both corrective actions that have been initiated or completed since the last annual report, and future corrective actions needed to address problems identified in this comprehensive stormwater inspection. Include an update on any outstanding corrective actions that had not been completed at the time of your previous annual report.

1. Corrective Action # ____ of ____ for this reporting period.

2. Is this corrective action:

- ☐ An update on a corrective action from a previous annual report; or
- ☐ A new corrective action?

3. Identify the condition(s) triggering the need for this review:

- ☐ Unauthorized release or discharge
- ☐ Numeric effluent limitation exceedance
- ☐ Control measures inadequate to meet applicable water quality standards
- ☐ Control measures inadequate to meet non-numeric effluent limitations
- ☐ Control measures not properly operated or maintained
- ☐ Change in facility operations necessitated change in control measures
- ☐ Average benchmark value exceedance
- ☐ Other (describe): _____

4. Briefly describe the nature of the problem identified:

5. Date problem identified: __/__/____

6. How problem was identified:

- ☐ Comprehensive site inspection
- ☐ Quarterly visual assessment
- ☐ Routine facility inspectio
- ☐ Benchmark monitoring
- ☐ Notification by EPA or State or local authorities
- ☐ Other (describe): _____

7. Description of corrective action(s) taken or to be taken to eliminate or further investigate the problem (e.g., describe modifications or repairs to control measures, analyses to be conducted, etc.) or if no modifications are needed, basis for that determination:

8. Did/will this corrective action require modification of your SWPPP? ☐ YES ☐ NO

9. Date corrective action initiated: __/__/____

10. Date correction action completed: __/__/____ or expected to be completed: __/__/____

11. If corrective action not yet completed, provide the status of corrective action at the time of the comprehensive site inspection and describe any remaining steps (including timeframes associated with each step) necessary to complete corrective action:

NPDES Permit Tracking No.:

E. ANNUAL REPORT CERTIFICATION

1. Compliance Certification

Do you certify that your annual inspection has met the requirements of Part 4.2 of the permit, and that, based upon the results of this inspection, to the best of your knowledge, you are in compliance with the permit? ☐ YES ☐ NO

If NO, summarize why you are not in compliance with the permit:

2. Annual Report Certification

I certify under penalty of law that this document and all attachments were prepared under my direction or supervision in accordance with a system designed to assure that qualified personnel properly gathered and evaluated the information submitted. Based on my inquiry of the person or persons who manage the system, or those persons directly responsible for gathering the information, the information submitted is, to the best of my knowledge and belief, true, accurate, and complete. I am aware that there are significant penalties for submitting false information, including the possibility of fine and imprisonment for knowing violations.

Authorized Representative Printed Name: Title:

Signature: Date Signed:

Harford County

Fleet Maintenance Facility

Stormwater Pollution Prevention Plan

June 2023

Revised April 2024
Revised May 2025

Submitted by:

Harford County Government
Department of Public Works
Division of Highways and Stormwater Management

Facility Operator:
Tiffany Fitzpatrick, Fleet Administrator
tfitzpatrick@harfordcountymd.gov
(410) 638-3102 x7989

Facility Location:
1304 Enterprise Court
Bel Air, MD 21014

Robert G. Cassilly
Harford County Executive

Joseph J. Siemek, P.E.
Director of Public Works

Robert S. McCord
Director of Administration

Steven A. Walsh, P.E.
Deputy Director of Public Works

FOREWORD

The Harford County Department of Public Works Division of Highways and the Watershed Protection and Restoration Office have developed a Stormwater Pollution Prevention Plan, also known as the *Harford County Fleet Maintenance Facility Stormwater Pollution Prevention Plan.* This *Plan* was developed in accordance with the *General Permit For Discharges From Stormwater Associated With Industrial Activities (Discharge Permit No. 20-SW; NPDES Permit No. MDR0000)* as established by Maryland Department of the Environment, effective February 1, 2023. The *Plan* also satisfies those requirements established by the Maryland Department of the Environment's National Pollutant Discharge Elimination System (NPDES) MS4 permit.

The Division of Highways and the Watershed Protection and Restoration Office shall review the *Harford County Fleet Maintenance Facility Stormwater Pollution Prevention Plan* at a minimum of every three (3) years. Should any of the following conditions listed below occur, the personnel shall revise and reissue the *Plan* to the appropriate individuals and the Maryland Department of the Environment (MDE):

- Applicable laws are revised;
- The *Plan* fails in an emergency; or
- The facility changes in design or operation which results in an increased potential for fires, explosions, or release of hazardous waste.

All revisions to the *Harford County Fleet Maintenance Facility Storm Water Pollution Prevention Plan* shall be documented by providing the date and noting the section(s) which have been revised since its initial development.

Contents

SECTION 1: FACILITY DESCRIPTION AND CONTACT INFORMATION 4
1.1 Facility Information 4
1.2 Contact Information/Responsible Parties 5
1.3 Stormwater Pollution Prevention Team 6
1.4 Activities at the Facility 6
1.5 General Location Map 7
1.6 Site Map 8
SECTION 2: POTENTIAL POLLUTANT SOURCES 9
2.1 Industrial Activity and Associated Pollutants 9
2.2 Spills and Leaks 9
2.3 Non-Stormwater Discharges Documentation 9
2.4 Salt Storage 9
2.5 Visual Monitoring Summary 9
2.6 PFAS or PCB Source Identification 10
SECTION 3: STORMWATER CONTROL MEASURES 10
3.1 Minimize Exposure 10
3.2 Good Housekeeping 11
3.3 Maintenance 12
3.4 Spill Prevention and Response 13
3.5 Erosion and Sediment Controls 14
3.6 Management of Runoff 14
3.7 Salt Storage Piles or Piles Containing Salt 15
3.8 20-SW Sector-Specific Non-Numeric Effluent Limits 15
3.9 Employee Training 16
3.11 Waste, Garbage and Floatable Debris 17
3.12 Dust Generation and Vehicle Tracking of Industrial Materials 17
SECTION 4: SCHEDULES AND PROCEDURES FOR MONITORING 18
SECTION 5: INSPECTIONS 19
SECTION 6: SWPPP CERTIFICATION 20

SECTION 7: SWPPP MODIFICATIONS 21
SWPPP ATTACHMENTS.....23

SECTION 1: FACILITY DESCRIPTION AND CONTACT INFORMATION

1.1 Facility Information

Name of Facility: Harford County Fleet Maintenance Facility
Street: 1304 Enterprise Court
City: Bel Air State: MD ZIP Code: 21014
County: Harford
Permit Registration Number: 20SW3747

Latitude/Longitude (Use decimal format)
Latitude: Longitude:
39.573340 ° N (decimal) -76.339149º W (decimal)

Estimated area of industrial activity at site exposed to stormwater: 8.07 acres

Primary SIC Code or 2-letter Activity Code: 1611
(refer to Appendix A of the 20-SW)
Identify your applicable sector and subsector: Sector AD.a: Dept of Public Works and Highway Maintenance Facilities

Name and 8-digit identifier of the receiving water body: Bynum Run; 02130704

Are any of your discharges directly into any segment of an "impaired" water? ☒ Yes ☐ No

If Yes, identify name of the impaired water (and segment, if applicable): Bynum Run; 1-2 order streams

Identify the pollutant(s) causing the impairment: TSS

For pollutants identified, which do you have reason to believe will be present in your discharge?

None

For pollutants identified, which have a completed TMDL? Sediment

Do you discharge into a high quality receiving water designated as a Tier 2 water? ☐ Yes ☒ No

Do you discharge into a high quality receiving water designated as Use III or Use IV? ☒ Yes ☐ No

1.2 Contact Information/Responsible Parties

Facility Operator:
Name: Tiffany Fitzpatrick
Address: 1304 Enterprise Count
City, State, Zip Code: Bel Air, MD 21014
Telephone Number: (410) 638-3102 x7989
Email address: tfitzpatrick@harfordcountymd.gov

Facility Owner:
Name: Harford County Government
Address: 220 S Main St
City, State, Zip Code: Bel Air, MD 21014
Telephone Number: (410) 879-2000
Email address: CountyExecutive@harfordcountymd.gov
Fax number: (410) 638-1387

SWPPP Contact:
Name: Richard Wise
Telephone number: (410) 638-3217 X2446
Email address: rhwise@harfordcountymd.gov
Fax number: (410) 879-8439

1.3 Stormwater Pollution Prevention Team

	NAME	TITLE	PHONE NUMBER	RESPONSIBILITIES
NPDES Program Manager	Danielle Hankins	Administrator	410-638-3217 X1176	Overseeing NPDES Program
Leader	Tiffany Fitzpatrick	District Supervisor	410-638-3102 x7989	Overseeing activities occurring at the Fleet Maintenance Facility SWPPP Preparation Implementing BMPs Evaluating BMPs to measure effectiveness of plan
Transdev	Ed Isaacoff	General Manager	410-879-6220	Monitoring Site Inspections Training
Transdev	Susan Dilworth	Operations Manager	410-879-6220	Monitoring Site Inspections Training
HCPS	Richard Hanzevack	Assistant Supervisor for Environmental Services	410-638-4088	Monitoring Site Inspections Training
Member	Richard Wise	Watershed Restoration Specialist	410-638-3217 X2446	Site assessments Identification of pollutant sources and risks SWPPP Preparation

1.4 Activities at the Facility

The Fleet Maintenance Facility is located at 1304 Enterprise Court, Bel Air, Maryland 21014. The Fleet Maintenance Facility provides vehicle and equipment maintenance services. Used motor oil fluids are collected and stored on site in double-walled, above-ground storage tanks located inside the maintenance facility before being transported off-site by a certificate hauler.

1.5 General Location Map

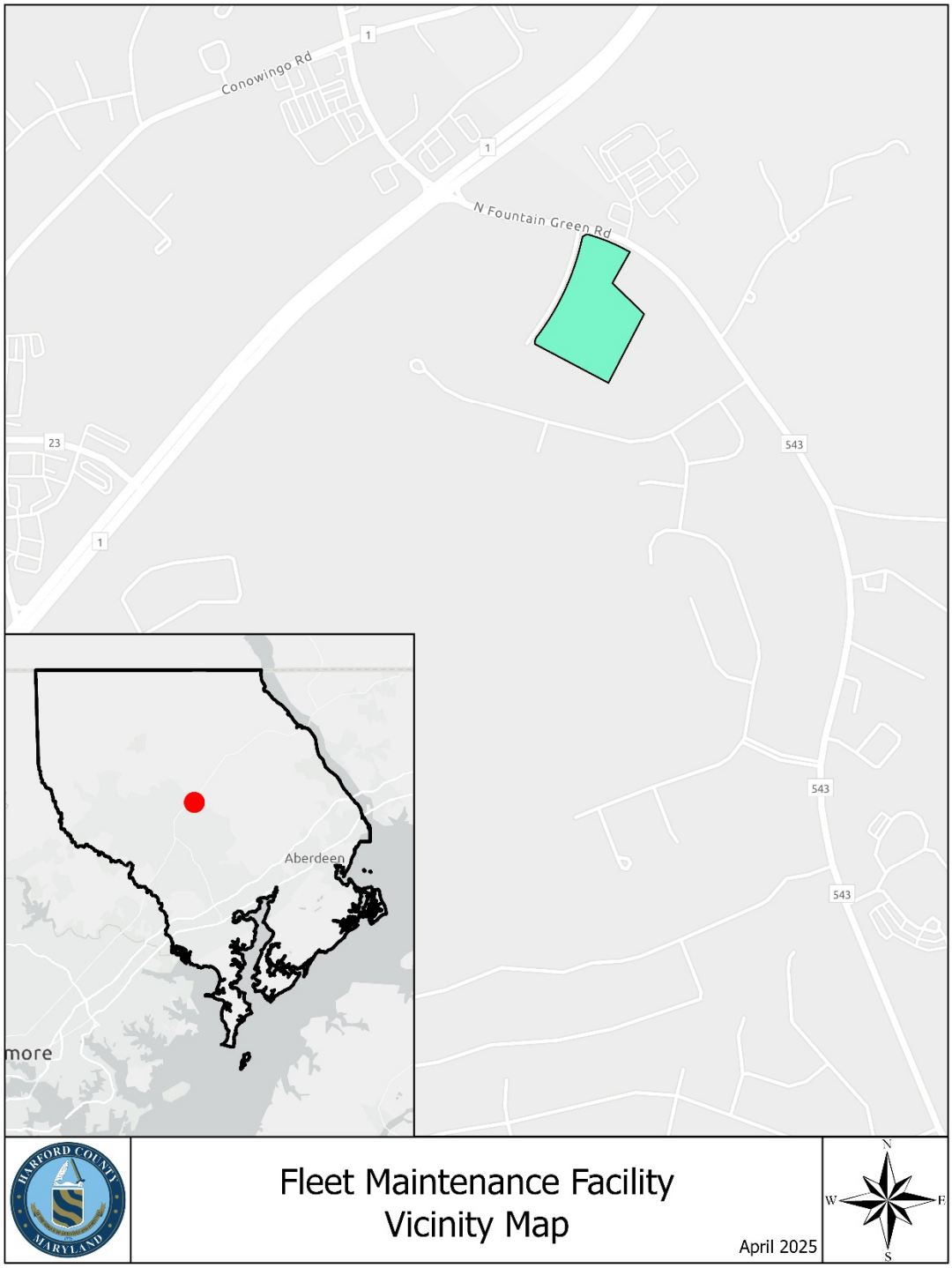

1.6 Site Map

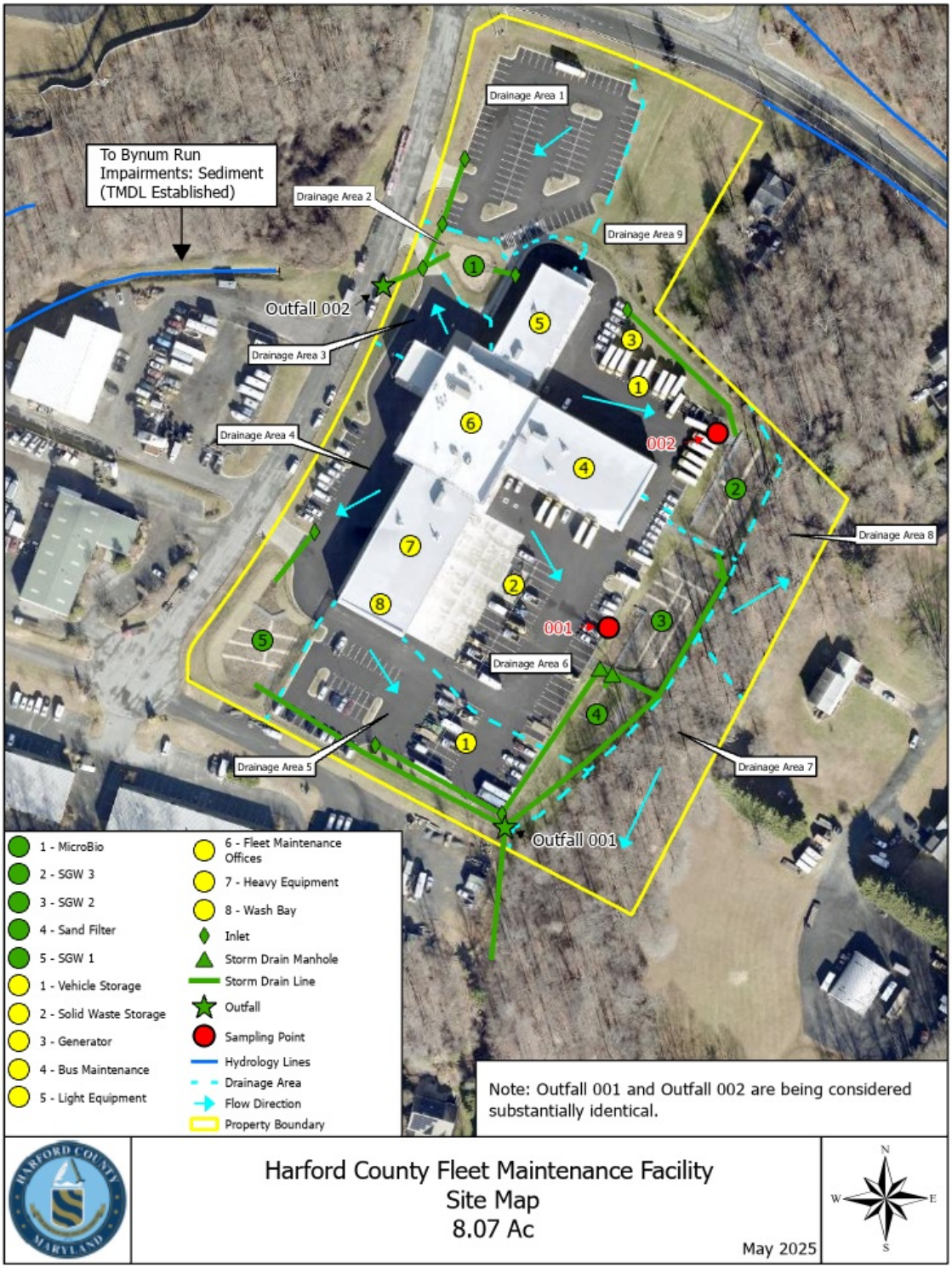
To Bynum Run
Impairments: Sediment
(TMDL Established)
Drainage Area 1
Drainage Area 2
Drainage Area 9
Outfall 002
Drainage Area 3
Drainage Area 4
002
Drainage Area 8
001
Drainage Area 6
Drainage Area 5
Drainage Area 7
Outfall 001
1 - MicroBio
2 - SGW 3
3 - SGW 2
4 - Sand Filter
5 - SGW 1
1 - Vehicle Storage
2 - Solid Waste Storage
3 - Generator
4 - Bus Maintenance
5 - Light Equipment
6 - Fleet Maintenance Offices
7 - Heavy Equipment
8 - Wash Bay
Inlet
Storm Drain Manhole
Storm Drain Line
Outfall
Sampling Point
Hydrology Lines
Drainage Area
Flow Direction
Property Boundary
Note: Outfall 001 and Outfall 002 are being considered substantially identical.
Harford County Fleet Maintenance Facility
Site Map
8.07 Ac
May 2025
N
W
E
S

SECTION 2: POTENTIAL POLLUTANT SOURCES

2.1 Industrial Activity and Associated Pollutants

Industrial Activity	Associated Pollutants
Material storage - Covered	Oil, antifreeze, paint, tires, grease, sorbents, solvents, batteries, fuels
Used oil collection - Covered	Oil
Accidental Spills and Leaks	Diesel Fuel (generator)

2.2 Spills and Leaks

Areas of Site Where Potential Spills/Leaks Could Occur

Location	Outfalls
Generator	Overland Flow
Parking lots	Outfall 001; Outfall 002

Description of Past Spills/Leaks

Date	Description	Outfalls
	none	

2.3 Non-Stormwater Discharges Documentation

Date	Method	Discharge noted	Corrective Action
	Visual Inspection	none	

2.4 Salt Storage

There are no salt domes or piles at this facility.

2.5 Visual Monitoring Summary

This is a new facility and therefore no previous visual monitoring summaries are available.

2.6 PFAS or PCB Source Identification

There are no known sources of PFAS or PCB at the Fleet Maintenance Facility.

SECTION 3: STORMWATER CONTROL MEASURES

3.1 Minimize Exposure

Outdoor Storage Areas

Exposed external locations contain dumpsters for trash and recyclables. All dumpsters are either covered or have existing lids. Vehicle storage occurs at the site; however, vehicles with leaks are either stored indoors or covered to prevent stormwater contamination. All damaged vehicles which have a higher potential for leaks are placed in a "hotspot" zone in the parking lot and frequently monitored. Any leakage from vehicles is addressed prior to placement of vehicles in parking lot for storage. Used tires are stored outside in a closed trailer.

Indoor Storage Areas

Storage of all materials and fluids used in the maintenance of vehicles and equipment that are not susceptible to storm water exposure are provided below.

Fleet Maintenance Building

Material	Purpose and/or Location	Quantity Stored (Maximum)	Likelihood of contact with storm water.
Antifreeze	Used for equipment.	500 Gallons	There is no likelihood of antifreeze encountering storm water since it is stored in containers under cover.
Transmission Fluid	Used for equipment.	1,500 Gallons	There is no likelihood of transmission fluid encountering storm water since its usage occurs indoors.
Oil, Hydraulic	Used for equipment.	500 Gallons	There is no likelihood of hydraulic oil encountering storm water since its usage occurs indoors.
Oil, Engine	Used for equipment.	2,000 Gallons	There is no likelihood of engine oil encountering storm water since its usage occurs indoors.
Oil, Used	Collected from equipment maintenance.	2,000 Gallons	There is no likelihood of used oil encountering storm water since it is stored indoors until collection.
Vehicle Wash Fluid	Used for cleaning of equipment.	210 Gallons	There is no likelihood of vehicle wash fluid encountering storm water since its usage occurs indoors.
Windshield Washer Fluid	Used for equipment.	675 Gallons*	There is no likelihood of windshield washer fluid encountering storm water since its usage occurs indoors.

*There is a total of three 225-gallon tanks of windshield washer fluid located at the facility. Each maintenance bay (light vehicle, heavy vehicle, bus) has its own 225-gallon tank. The maximum volume for all tanks is listed.

3.2 Good Housekeeping

The Fleet Maintenance Facilities have implemented the following good housekeeping measures listed below:

Operation and Maintenance

- Maintain dry and clean floors and ground surfaces by using brooms, shovels, vacuum cleaners, or cleaning machines.
- Regularly pick up and dispose of garbage and waste material.
- Make sure equipment is working properly.
- Routinely inspect for leaks or conditions that could lead to discharges of chemicals or contact of storm water with raw materials, intermediate materials, waste materials, or products.
- Make sure outside areas are kept in a neat and orderly condition.
- Implement weekly housekeeping inspections.
- Ensure that spill cleanup procedures are understood by employees.

Material Storage Practices

- Provide adequate aisle space to facilitate material transfer and easy access for inspections.
- Store containers, drums, and bags away from direct traffic routes to prevent accidental spills.
- Stack containers according to manufacturers' instructions to avoid damaging the containers from improper weight distribution.
- Store containers on pallets or similar devices to prevent corrosion of the containers due to contact with moisture on the ground.
- Assign the responsibility of hazardous material inventory to a limited number of people who are trained to handle hazardous materials.

Material Inventory Procedures

- Identify all chemical substances present in the workplace.
- Label all containers to show the name and type of substance, stock number, expiration date, health hazards, suggestions for handling, and first aid information.
- Clearly mark on the inventory hazardous materials that require special handling, storage, use, and disposal considerations.
- Ensure storage areas are designed to contain spills.
- Implement a shelf-life program which can reduce waste that results from overstocking and allows for the disposal of outdated materials.

Employee Participation

- Incorporate information sessions on good housekeeping practices into the facility's employee training program.
- Discuss good housekeeping at employee meetings.
- Post bulletin boards with updated good housekeeping procedures, tips, and reminders.

3.3 Maintenance

The Fleet Maintenance Facility implemented the following Preventative Maintenance measures and conducts inspections as noted below.

Submerged Gravel Wetland and Bioretention Systems

- Mulch and soil shall be replaced in the Spring in any areas that have experienced erosion or washout.
- Twice per year, plant material shall be inspected, pruned as necessary and dead material and invasive species removed.
- Inflow areas shall be kept free of excess sediment and debris.
- Trash removed from facility when applicable.
- Ensure facility is dewatering completely within 48-72 hours of a storm event.
- Soil erosion shall be addressed on an as-needed basis.

Sand Filter

- Sand shall be replaced when the sand filter fails to dewater, or when animal burrows are present.
- Twice per year, plant material shall be inspected, pruned as necessary and dead material and invasive species removed.
- Inflow areas shall be kept free of excess sediment and debris.
- Trash shall be removed from the facility when applicable.
- Ensure facility is dewatering completely within 48-72 hours of a storm event.
- Soil erosion shall be addressed on an as-needed basis.

Vegetative Areas

- Personnel shall conduct inspections of the permanent vegetative areas around the perimeter of the facility to determine if repairs, replacements and reseedings are necessary.

Employee Participation

- Schedule monthly Maintenance Inspections.
- Implement a schedule to adjust, repair, or replace equipment or systems in a regular or timely manner.
- Promptly repair defective equipment found during inspections and testing.
- Inspect and test facility equipment and systems to uncover conditions that could cause breakdowns or failures resulting in discharges of pollutants to surface waters.
- Maintain records on Preventive Maintenance inspections.

3.4 Spill Prevention and Response

Upon inspection of the Fleet Maintenance Facility, the areas identified most susceptible to a spill were the fueling, storage and oil recycling areas. Spill clean-up kits are available in these areas to absorb and properly dispose of spilled materials.

Preventive measures implemented by Harford County to improve material handling procedures and storage include the following:

- Adopting effective housekeeping practices.
- Performing regular visual inspections to identify signs of wear on storage containers, equipment, etc.
- Performing preventive maintenance on equipment, tanks, etc.
- Using filling procedures for tanks and other equipment to minimize spills.
- Using material transfer procedures that reduce the chance of leaks or spills.
- Substituting less or non-toxic materials for toxic materials.
- Ensuring appropriate security.
- Developing ways to recycle, clean, and/or reuse process materials to reduce the volume brought into the facility.
- Installing leak detection devices, overflow controls, and diversion berms.

In the event of a spill, staff will follow the procedures listed below:

1. Identify the material, the source, and approximate quantity.
2. Attend to any individuals who are injured and contact 911 for further assistance if necessary.
3. Evaluate the potential for fires, explosions, etc.
4. If possible, stop the release to prevent the situation from worsening.
5. Contain the spill using pads, berms, ditches, etc.
6. Evaluate if the situation is an immediate threat to the life or health of fellow employees.
7. If the material has a Reportable Quantity (RQ) Requirement and the spill was in excess of the RQ amount, contact Emergency Response Agencies.
8. Prevent other humans or vehicles from coming into contact with the spill by sectioning off the area, posting a sign, or having someone guard the area.
9. Organize those individuals responsible for spill cleanup, review the situation with them, any hazards they may encounter, and ensure they are using proper equipment, protective clothing, following proper clean up, decontamination, and disposal procedures.
10. Dispose of contaminated absorbents and other supplies properly and decontaminate any equipment used in the clean-up process and dispose of contaminated absorbents and other supplies properly.

Harford County shall, after any spill, evaluate the Response Plan and make any necessary improvements to the Plan.

3.5 Erosion and Sediment Controls

Harford County maintains three submerged gravel wetlands, a sand filter and a bioretention area to limit erosion at the Fleet Maintenance Facility. Harford County's Department of Public Works Storm Water Management staff conducts annual inspections to ensure proper maintenance of controls.

3.6 Management of Runoff

The following best management practices have been installed at the Harford County Fleet Maintenance Facility:

Submerged Gravel Wetland 1

This submerged gravel wetland collects 1.17 acres of runoff and has an ESDV of 7,693 cubic feet. Water from this submerged gravel wetland flows to Manhole # 101 and proceeds to an offsite quantity storage pond located to the west behind 1303 Enterprise Court. The quantity storage pond then discharges into Bynum Run.

Submerged Gravel Wetland 2

This submerged gravel wetland collects 2.09 acres of treatment and has an ESDV of 13,916 cubic feet. Water from this submerged gravel wetland flows to Manhole # 101 and proceeds to an offsite quantity storage pond located to the west behind 1303 Enterprise Court. The quantity storage pond then discharges into Bynum Run.

Submerged Gravel Wetland 3

This submerged gravel wetland collects 1.23 acres of runoff and has an ESDV of 8,561 cubic feet. Water from this submerged gravel wetland flows to Manhole # 101 and proceeds to an offsite quantity storage pond located to the west behind 1303 Enterprise Court. The quantity storage pond then discharges into Bynum Run.

Sand Filter

This sand filter collects 1.04 acres of runoff but does not provide ESDV. Water from this sand filter flows to Manhole # 101 and proceeds to an offsite quantity storage pond located to the west behind 1303 Enterprise Court. The quantity storage pond then discharges into Bynum Run.

Micro-Bioretention Facility

This micro-bioretention facility collects 0.49 acres of runoff and has an ESDV of 3,356 cubic feet. Water from this bioretention facility flows to Inlet # 401 and proceeds to an offsite quantity storage pond located to the west behind 1303 Enterprise Court. The quantity storage pond then discharges into Bynum Run.

These facilities are inspected triennially as required by the County and MDE. Inspection reports are available from the County.

3.7 Salt Storage Piles or Piles Containing Salt

Harford County Fleet Maintenance Facility does not have salt storage piles.

3.8 20-SW Sector-Specific Non-Numeric Effluent Limits

Within Sector AD.a. Department of Public Works and Highways Maintenance Facilities, the Specific Non-Numeric Effluent Limits are described in Sector P Transportation and Warehousing.

P.3 Additional Technology-Based Effluent Limits.
- P.3.1 Good Housekeeping Measures
  - P.3.1.1 Vehicle and Equipment Storage Areas
  - P.3.1.2 Fueling Areas
    - There is no fueling area at this facility.
  - P.3.1.3 Material Storage Areas
    - The material storage areas are handled as described in Item 3.2 above.
  - P.3.1.4 Vehicle and Equipment Cleaning Areas
    - All vehicle and equipment cleaning areas are located in enclosed areas at the facility.
  - P.3.1.5 Vehicle and Equipment Maintenance Areas
    - All vehicle and equipment maintenance areas are located in enclosed areas at the facility.
  - P.3.1.6 Locomotive Sanding
    - Not applicable.
- P.3.2 Employee Training

P.4 Additional SWPPP Requirements
- P.4.1 Drainage Area Site Map
  - The site map is provided in Section 1.6 above.
- P.4.2 Potential Pollutant Sources
  - Potential Pollutant Sources are described in Items 2.1 and 2.2 above.
- P.4.3 Description of Good Housekeeping Measures
  - Good Housekeeping Measures are described in Section 3.2 above.
- P.4.4 Vehicle and Equipment Washwater Requirements

P.5 Additional Inspection Requirements
- Inspection procedures are described in Sections 3.2 and 3.3 above.

3.9 Employee Training

Fleet Maintenance Facility conducts the employee training programs described below and makes modifications as necessary to ensure all employees are properly educated of all measures contained in the pollution prevention plan. Employee training records should be kept on file at the Fleet Maintenance Facility.

TRAINING TOPICS	BRIEF DESCRIPTION OF TRAINING PROGRAM / MATERIALS	SCHEDULE FOR TRAINING (LIST DATES)	ATTENDEES
SPILL PREVENTION AND RESPONSE Identifying potential spill areas and drainage routes; Procedures for reporting spills; Appropriate material handling procedures and storage requirements; Implementing spill response procedures	Videos and Posted Notices	Routine training to be conducted by Fleet Maintenance Facility staff	All shop employees
GOOD HOUSEKEEPING Regular vacuuming and/or sweeping; Prompt clean-up of spilled materials to prevent pollution run-off; Identify where brooms, vacuums, sorbents, foams, neutralizing agents, and other good housekeeping and spill response equipment are located; Instruction on securing drums and containers and frequently checking for leaks and spills; Outline a regular schedule for housekeeping activities	Safety Training Meetings	Annually	All shop employees
MATERIAL MANAGEMENT PRACTICES Organize materials for storage; Identify all toxic and hazardous substances stored and handled on-site; Discuss handling procedures for all toxic and hazardous materials	Briefings	Annually	All shop employees

3.10 Non-Stormwater Discharges

Non-stormwater discharges are addressed as described in Section 2.3 above.

3.11 Waste, Garbage and Floatable Debris

Waste, Garbage and Floatable Debris are addressed in Section 3.2 above.

3.12 Dust Generation and Vehicle Tracking of Industrial Materials

Good housekeeping measures on paved surfaces are employed to minimize dust generation.

SECTION 4: SCHEDULES AND PROCEDURES FOR MONITORING

The Harford County Fleet Maintenance Facility does not have Benchmark Monitoring Requirements as described for Sector AD.a *Department of Public Works and Highways Maintenance Facilities***.** Stormwater from the Fleet Maintenance Facility discharges into unnamed tributaries to Bynum Run, a tributary to Bush River.

Location	Frequency	Method	Responsible Person
Sampling Pt. 001	**Quarterly**	**Visual evaluation**	**General Manager**
Sampling Pt. 002	**Quarterly**	**Visual evaluation**	**General Manager**

Once per quarter, a stormwater sample must be collected from each outfall in such a manner that they are representative of the stormwater discharge from that outfall. A quality storm event is any storm where there is measurable discharge. The sample(s) shall be collected in a colorless glass or plastic container and visually examined for the parameters listed on the Quarterly Visual Monitoring Form (Attachment D). The Quarterly Visual Monitoring Form shall be signed and dated by the person conducting the visual examination. A copy of the completed Quarterly Visual Monitoring Form shall be kept with the facility's SWPPP and be available when requested.

Due to accessibility issues related to sampling at Outfall 001 and Outfall 002, the Maryland Department of the Environment has approved the quarterly visual monitoring samples to be collected at Sampling Point 001 and Sampling Point 002 (see attached site maps on Page 8 and Attachment B). Outfall 001 and Outfall 002 are considered substantially identical due to both outfalls discharging substantially identical effluents from similar general industrial activities and exposed materials that may significantly contribute pollutants to stormwater. Outfall 001 and Outfall 002 discharge into the stormwater management pond located to the west of the facility behind 1303 Enterprise Court. Monitoring takes place onsite at Sampling Points 001 and 002.

Should there be any indication of a pollutant, an inspection will be performed to determine the source of the pollutant and corrective actions will be taken to remove the source.

SECTION 5: INSPECTIONS

In addition to the quarterly visual monitoring of stormwater discharge, routine site inspections will be performed as described in Sections 3.2 and 3.3 above on a quarterly basis as required by the county's 20-SW permit. Annually, qualified personnel will perform a comprehensive site evaluation (Attachment E). This inspection will include the following elements:

- Inspect storm water drainage areas for evidence of pollutants entering the drainage system.
- Evaluate the effectiveness of measures to reduce pollutant loadings and whether additional measures are needed.
- Observe structural measures, sediment controls, and other storm water BMPs to ensure proper operation.
- Inspect any equipment needed to implement the plan, such as spill response equipment.
- Revise the plan as needed within two weeks of inspection (potential pollutant source description and description of measures and controls).
- Implement any necessary changes in a timely manner, but at least within 12 weeks of the inspection.
- Prepare a report summarizing inspection results and follow up actions, the date of inspection and personnel who conducted the inspection; identify any incidents of non-compliance or certify that the facility is in compliance with the plan.
- Document all incidents of noncompliance in the inspection report. Where there are no incidents of noncompliance, the inspection report must contain a certification that the facility is in compliance with the plan.
- Sign the report and submit it with the plan.

SECTION 6: SWPPP CERTIFICATION

I certify under penalty of law that this document and all attachments were prepared under my direction or supervision in accordance with a system designed to assure that qualified personnel properly gathered and evaluated the information submitted. Based on my inquiry of the person or persons who manage the system, or those persons directly responsible for gathering the information, the information submitted is, to the best of my knowledge and belief, true, accurate, and complete. I am aware that there are significant penalties for submitting false information, including the possibility of fine and imprisonment for knowing violations.

Name: Danielle Hankins Title: Administrator

Signature: Danielle M Hankins
I am approving this document
2025.05.27 15:19:13-04'00' Date: 05.27.2025

SECTION 7: SWPPP MODIFICATIONS

Original Completion Date: June 2023

Revision Date: April 2024

Revisions:

- Section 1.1 Facility Information
- Section 1.3 Stormwater Pollution Prevention Team

Revision Date: May 2025

Revisions:

- Overall formatting and grammar revisions
- Section 1.1 Facility Information
  - Added primary SIC code
  - Added name of receiving body of water
- Section 1.2 Contact Information/Responsible Parties
  - Updated SWPPP Contact
- Section 1.3 Stormwater Pollution Prevention Team
  - Updated Administrator
  - Updated Watershed Restoration Specialist
- Section 1.4 Activities at the Facility
  - Removed language that stated Maryland Environmental Service operated and maintained used motor fluid collection
- Section 1.5 General Location Map
  - Revised General Location Map
- Section 1.6 Site Map
  - Updated Site Map
    - Corrected location of Sampling Point 002
    - Added location of facility generator
    - Revised drainage areas
    - Labelled drainage areas
    - Corrected location of several inlets
    - Revised labels for BMPs
    - Revised labels for possible pollutant sources
- Section 2.1 Industrial Activity and Associated Pollutants
  - Added accidental spills and leaks of diesel fuel related to the facility generator
- Section 2.2 Spills and Leaks – Areas of Site Where Potential Spills/Leaks Could Occur
  - Removed oil/antifreeze recycling

- Added generator
- Section 3.1 Minimize Exposure – Indoor Storage Areas – Fleet Maintenance Building
  - Removed column for Quantity Used
  - Updated column for Quantity Stored to represent the maximum amount of product to be stored at any given time
  - Removed PIG absorbents
  - Separated grease and transmission fluid into individual rows
  - Added rows for used engine oil, vehicle wash fluid and windshield washer fluid information
- Section 3.6 Management of Runoff
  - Separated information related to BMPs into individual sections for each BMP at the facility
- Section 4 Schedules and Procedures for Monitoring
  - Added table displaying sample location, frequency, method and responsible party
  - Revised language regarding the collection of the quarterly visual monitoring samples
- SWPPP Attachments
  - Updated Attachment A – General Location Map included as an 11”x17” map
  - Updated Attachment B – Site Map included as an 11”x17” map
  - Included Attachment D – Quarterly Visual Monitoring Form
  - Included Attachment E – EPA Annual Reporting Form

SWPPP ATTACHMENTS

Attachment A – General Location Map

Attachment B – Site Map

Attachment C – General Permit 20-SW

Attachment D – Quarterly Visual Monitoring Form

Attachment E – EPA Annual Reporting Form

Attachment A – General Location Map

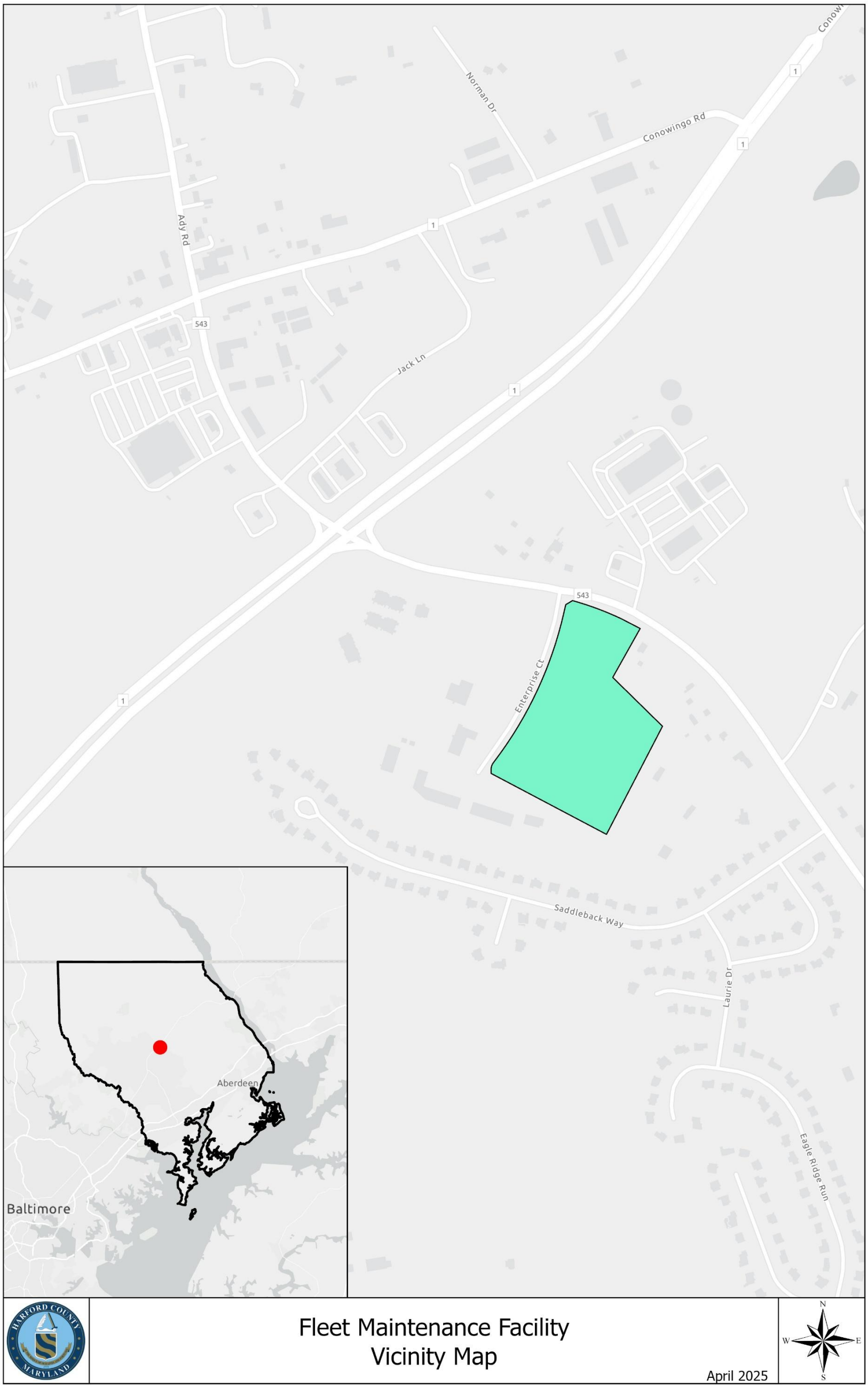

Attachment B – Site Map

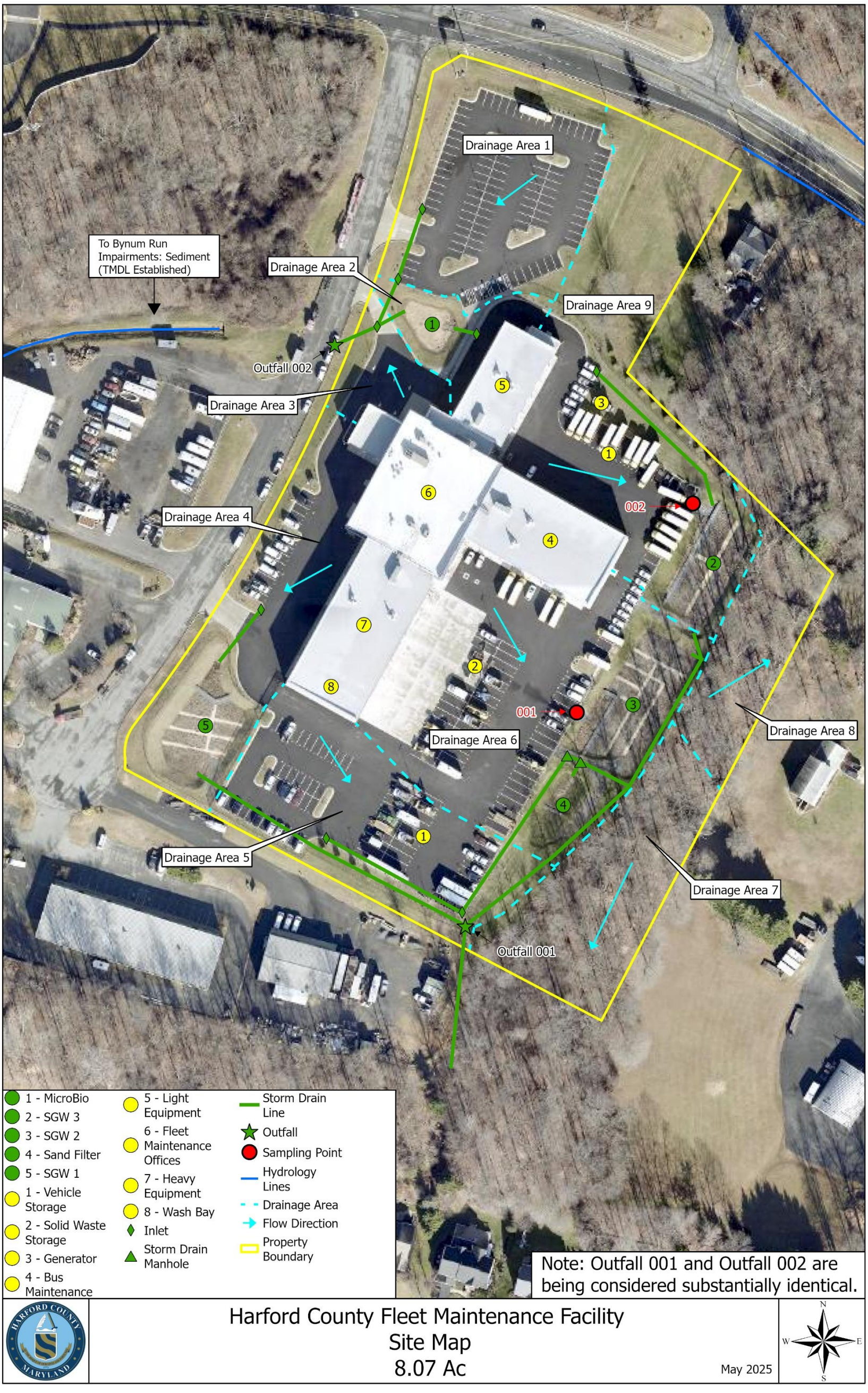

Attachment C – General Permit 20-SW

Attachment D – Quarterly Visual Monitoring Form

Quarterly Visual Monitoring Form

Fill out a separate form for each outfall sampled.

Sample Location					
Quarter / Year:		**Date / Time Collected:**		**Date / Time Examined:**	
Qualifying Storm Event?	Yes No	**Runoff Source:**	Rainfall Snowmelt		
Collector's Name & Title					
Examiner's Name & Title					

Parameter	Parameter Description	Parameter Characteristics
1. Color	Does the stormwater appear to have any color? **Yes** **No (Clear)**	If Yes, describe: *Yellow* *Brown* *Red* *Gray* *Other*:
2. Clarity	Is the stormwater not clear? **Yes** **No**	If not clear, which of the following best describes the clarity of the stormwater? *Suspended Solids* *Milky/Cloudy* *Opaque* *Other :*
3. Oil Sheen	Can you see a rainbow effect or sheen on the water surface? **Yes** **No**	Which best describes the sheen? *Rainbow sheet* *Floating oil globules* *Other :*
4. Odor	Does the sample have an odor? **Yes** **No**	If Yes, describe: *Chemical* *Musty* *Rotten Eggs* *Sewage* *Sour Milk* *Oil/Petroleum* *Other :*
5. Floating Solids	Is there anything on the surface of the sample? **Yes** **No**	If Yes, describe: *Suds* *Oily Film* *Garbage* *Sewage* *Water Fowl Excrement* *Other :*
6. Suspended Solids	Is there anything suspended in the sample? **Yes** **No**	Describe:
******Leave sample undisturbed for 30 minutes.******		
7. Settled Solids	Is there anything settled on the bottom of the sample? **Yes** **No**	Describe: (*note type, size and material after sample is not disturbed for 30 minutes)*
8. Foam	Does foam or material form on the top of the sample surface if you shake it? **Yes** **No**	Describe:

9. If there are any visible indicators of pollution identify (1) where the pollution may come from and (2) any corrective actions taken.

Stormwater Collector's Signature and Date:

Stormwater Examiner's Signature and Date:

Note – Sample should be collected and analyzed in a colorless glass or plastic bottle.

Instructions for Completing the Visual Monitoring Form

Per PART V. INSPECTIONS, MONITORING, AND REPORTING, you must collect a stormwater sample from each outfall once each quarter for the entire permit term and conduct a visual assessment of each sample. You must follow the monitoring procedures outlined in Part V.C. These samples should be collected in such a manner that they are representative of the stormwater discharge from that outfall. Each assessment must be kept onsite with your SWPPP and available for inspection and review by the Department at anytime.

First, fill out all information on the top of the visual monitoring form. A qualifying storm event is any storm where there is a measurable discharge. Then, take a grab sample in a clear container. Evaluate the sample in a well-lit area for the following parameters:

1. **Color:** Record the best description of the sample color in the appropriate space on the form.
2. **Clarity**: This parameter refers to how cloudy the sample is. It is *usually* an indication of fewer pollutants in the water if the sample is clear or transparent. If the clarity has changed since the last sample, try to identify what might have caused this to happen.
   - **Clear** – Sample doesn't block any light; can be seen through regardless of color.
   - **Cloudy** – Sample blocks some light; objects not clear but can be identified looking through the sample.
   - **Very Cloudy** – Sample blocks most light; objects cannot be identified looking through the sample.
   - **Opaque** – Sample blocks all light; objects cannot be seen when looking through the sample.
3. **Oil Sheen:** Record whether or not an oil sheen is present. If a film of iridescent color is noted on the surface of the sample or a rainbow effect appears to be floating on the surface of the water, this usually indicates oil is present.
4. **Odor:** If sample has no odor other than natural rainwater or snowmelt, write "NO" on the visual monitoring form. Note the presence of any of the following odors if detected, such as gasoline, diesel, oil, solvents (WD-40, other petroleum products, etc.), garbage, fishy, sweet/sugary, any other unusual odors not normally present in clean runoff from the area sampled.
5. **Floating Solids:** A contaminated flow may contain solids or liquids floating on the surface. Identifying floatables can aid in finding the source of the contamination. Examples of floatables are spoiled food products, oils, plant parts, solvents, sawdust, foams and fuel. Give a general description of the type of floating solids present (wood chips, leaf debris, algae, etc) in the general comments section for each sample. Identify amount of floating solids as described below.
   - **High** – More than 20% of the surface of the sample is covered with floating solids.
   - **Moderate** – Less than 20% of the surface of the sample is covered with floating solids.
   - **Slight** – Only a few floating particles observed on the surface of the sample.
   - **None** – No floating solids present on the surface of the sample.
6. **Suspended solids:** Record whether or not suspended solids are present in the sample. Suspended solids are particles floating inside the column of water, not on top, and may contribute to changes in water color or clarity. Cracked or deteriorated concrete or peeling surface paint at an outfall usually indicates the presence of severely contaminated discharges. Contaminants causing this type of damage are usually very acidic or basic.

---------- WAIT 30 MINUTES ----------

Leave the sample undisturbed for 30 minutes to allow the water and anything in it to settle.

7. **Settled Solids:** After 30 minutes has passed, give a general description of the type of settled solids present (sand, decayed plant matter, rust particles, etc.) in the general comments section.
8. **Foam:** After completing #7, shake the bottle gently. Record foam results on the form as they most closely match one of the descriptions listed below.
   - **None** – Most bubbles break down within ten (10) seconds of shaking; only a few large bubbles persist longer than ten (10) seconds.
   - **Moderate** – Many small bubbles are present but these bubbles persist for less than two (minutes) after shaking.
   - **High** – Many small bubbles are present and they persist longer than two (2) minutes after shaking.
9. Detail any concerns, corrective actions taken and any other indicators of pollution present in the sample. This should include the identified source if there are visible indicators present in the sample. The person performing test must sign and date each form**.**

Attachment E – EPA Annual Reporting Form

NPDES Permit Tracking No.:

UNITED STATES ENVIRONMENTAL PROTECTION AGENCY
WASHINGTON, DC 20460

Annual Reporting Form

A. GENERAL INFORMATION

1. Facility Name:

2. NPDES Permit Tracking No.:

3. Facility Physical Address:

a. Street:

b. City: c. State: d. Zip Code: -

4. Lead Inspectors Name: Title:

Additional Inspectors Name(s):

5. Contact Person: Title:

Phone: - - Ext. E-mail:

6. Inspection Date : / /

B. GENERAL INSPECTION FINDINGS

1. As part of this comprehensive site inspection, did you inspect all potential pollutant sources, including areas where industrial activity may be exposed to stormwater?
☐ YES ☐ NO

If NO, describe why not:

NOTE: *Complete Section C of this form for each industrial activity area inspected and included in your SWPPP or as newly identified in B.2 or B.3 below where pollutants may be exposed to stormwater.*

2. Did this inspection identify any stormwater or non-stormwater outfalls not previously identified in your SWPPP? ☐ YES ☐ NO

If YES, for each location, describe the sources of those stormwater and non-stormwater discharges and any associated control measures in place:

NPDES Permit Tracking No.:

3. Did this inspection identify any sources of stormwater or non-stormwater discharges not previously identified in your SWPPP? ☐ YES ☐ NO

If YES, describe these sources of stormwater or non-stormwater pollutants expected to be present in these discharges, and any control measures in place:

4. Did you review stormwater monitoring data as part of this inspection to identify potential pollutant hot spots? ☐ YES ☐ NO ☐ NA, no monitoring performed

If YES, summarize the findings of that review and describe any additional inspection activities resulting from this review:

5. Describe any evidence of pollutants entering the drainage system or discharging to surface waters, and the condition of and around outfalls, including flow dissipation measures to prevent scouring:

6. Have you taken or do you plan to take any corrective actions, as specified in Part 3 of the permit, since your last annual report submission (or since you received authorization to discharge under this permit if this is your first annual report), including any corrective actions identified as a result of this annual comprehensive site inspection?

☐ YES ☐ NO

If YES, how many conditions requiring review for correction action as specified in Parts 3.1 and 3.2 were addressed by these corrective actions? ☐☐

NOTE: *Complete the attached Corrective Action Form (Section D) for each condition identified, including any conditions identified as a result of this comprehensive stormwater inspection.*

NPDES Permit Tracking No.:

C. INDUSTRIAL ACTIVITY AREA SPECIFIC FINDINGS

Complete one block for each industrial activity area where pollutants may be exposed to stormwater. Copy this page for additional industrial activity areas.

In reviewing each area, you should consider:

- Industrial materials, residue, or trash that may have or could come into contact with stormwater;
- Leaks or spills from industrial equipment, drums, tanks, and other containers;
- Offsite tracking of industrial or waste materials from areas of no exposure to exposed areas; and
- Tracking or blowing of raw, final, or waste materials from areas of no exposure to exposed areas.

INDUSTRIAL ACTIVITY AREA _____:

1. Brief Description**:**

2. Are any control measures in need of maintenance or repair? ☐ YES ☐ NO

3. Have any control measures failed and require replacement? ☐ YES ☐ NO

4. Are any additional/revised control measures necessary in this area? ☐ YES ☐ NO

If YES to any of these three questions, provide a description of the problem: (Any necessary corrective actions should be described on the attached Corrective Action Form)

INDUSTRIAL ACTIVITY AREA _____:

1. Brief Description:

2. Are any control measures in need of maintenance or repair? ☐ YES ☐ NO

3. Have any control measures failed and require replacement? ☐ YES ☐ NO

4. Are any additional/revised c necessary in this area? ☐ YES ☐ NO

If YES to any of these three questions, provide a description of the problem: (Any necessary corrective actions should be described on the attached Corrective Action Form)

INDUSTRIAL ACTIVITY AREA _____:

Brief Description:

2. Are any control measures in need of maintenance or repair? ☐ YES ☐ NO

3. Have any control measures failed and require replacement? ☐ YES ☐ NO

4. Are any additional/revised BMPs necessary in this area? ☐ YES ☐ NO

If YES to any of these three questions, provide a description of the problem: (Any necessary corrective actions should be described on the attached Corrective Action Form)

NPDES Permit Tracking No.:

NOTE: *Copy this page and attach additional pages as necessary*

INDUSTRIAL ACTIVITY AREA _____:

1. Brief Description:

2. Are any control measures in need of maintenance or repair? ☐ YES ☐ NO

3. Have any control measures failed and require replacement? ☐ YES ☐ NO

4. Are any additional/revised BMPs necessary in this area? ☐ YES ☐ NO

If YES to any of these three questions, provide a description of the problem: (Any necessary corrective actions should be described on the attached Corrective Action Form)

INDUSTRIAL ACTIVITY AREA _____:

1. Brief Description:

2. Are any control measures in need of maintenance or repair? ☐ YES ☐ NO

3. Have any control measures failed and require replacement? ☐ YES ☐ NO

4. Are any additional/revised BMPs necessary in this area? ☐ YES ☐ NO

If YES to any of these three questions, provide a description of the problem: (Any necessary corrective actions should be described on the attached Corrective Action Form)

INDUSTRIAL ACTIVITY AREA _____:

1. Brief Description:

2. Are any control measures in need of maintenance or repair? ☐ YES ☐ NO

3. Have any control measures failed and require replacement? ☐ YES ☐ NO

4. Are any additional/revised BMPs necessary in this area? ☐ YES ☐ NO

If YES to any of these three questions, provide a description of the problem: (Any necessary corrective actions should be described on the attached Corrective Action Form)

NPDES Permit Tracking No.:

D. CORRECTIVE ACTIONS

Complete this page for each specific condition requiring a corrective action or a review determining that no corrective action is needed. Copy this page for additional corrective actions or reviews.

Include both corrective actions that have been initiated or completed since the last annual report, and future corrective actions needed to address problems identified in this comprehensive stormwater inspection. Include an update on any outstanding corrective actions that had not been completed at the time of your previous annual report.

1. Corrective Action # ____ of ____ for this reporting period.

2. Is this corrective action:

- ☐ An update on a corrective action from a previous annual report; or
- ☐ A new corrective action?

3. Identify the condition(s) triggering the need for this review:

- ☐ Unauthorized release or discharge
- ☐ Numeric effluent limitation exceedance
- ☐ Control measures inadequate to meet applicable water quality standards
- ☐ Control measures inadequate to meet non-numeric effluent limitations
- ☐ Control measures not properly operated or maintained
- ☐ Change in facility operations necessitated change in control measures
- ☐ Average benchmark value exceedance
- ☐ Other (describe): _____

4. Briefly describe the nature of the problem identified:

5. Date problem identified: __/__/____

6. How problem was identified:

- ☐ Comprehensive site inspection
- ☐ Quarterly visual assessment
- ☐ Routine facility inspectio
- ☐ Benchmark monitoring
- ☐ Notification by EPA or State or local authorities
- ☐ Other (describe): _____

7. Description of corrective action(s) taken or to be taken to eliminate or further investigate the problem (e.g., describe modifications or repairs to control measures, analyses to be conducted, etc.) or if no modifications are needed, basis for that determination:

8. Did/will this corrective action require modification of your SWPPP? ☐ YES ☐ NO

9. Date corrective action initiated: __/__/____

10. Date correction action completed: __/__/____ or expected to be completed: __/__/____

11. If corrective action not yet completed, provide the status of corrective action at the time of the comprehensive site inspection and describe any remaining steps (including timeframes associated with each step) necessary to complete corrective action:

NPDES Permit Tracking No.:

E. ANNUAL REPORT CERTIFICATION

1. Compliance Certification

Do you certify that your annual inspection has met the requirements of Part 4.2 of the permit, and that, based upon the results of this inspection, to the best of your knowledge, you are in compliance with the permit? ☐ YES ☐ NO

If NO, summarize why you are not in compliance with the permit:

2. Annual Report Certification

I certify under penalty of law that this document and all attachments were prepared under my direction or supervision in accordance with a system designed to assure that qualified personnel properly gathered and evaluated the information submitted. Based on my inquiry of the person or persons who manage the system, or those persons directly responsible for gathering the information, the information submitted is, to the best of my knowledge and belief, true, accurate, and complete. I am aware that there are significant penalties for submitting false information, including the possibility of fine and imprisonment for knowing violations.

Authorized Representative Printed Name: Title:

Signature: Date Signed:

Harford County

Hickory II

Highway Maintenance Facility

Stormwater Pollution Prevention Plan

June 2023

Revised April 2024
Revised May 2025

Submitted by:

Harford County Government
Department of Public Works
Division of Highways and Stormwater Management

Facility Operator:
Rich Burcham, Supervisor
rlburcham@harfordcountymd.gov
(410) 638-3279 x7948

Facility Location:
1807 N Fountain Green Road
Bel Air, MD 21015

Robert G. Cassilly
Harford County Executive

Joseph J. Siemek, P.E.
Director of Public Works

Robert S. McCord
Director of Administration

Steven A. Walsh, P.E.
Deputy Director of Public Works

FOREWORD

The Harford County Department of Public Works Division of Highways and the Watershed Protection and Restoration Office have developed a Stormwater Pollution Prevention Plan, also known as the *Harford County Hickory II Highway Maintenance Facility Storm Water Pollution Prevention Plan.* This *Plan* was developed in accordance with the *General Permit For Discharges From Stormwater Associated With Industrial Activities (Discharge Permit No. 20-SW; NPDES Permit No. MDR0000)* as established by Maryland Department of the Environment, effective February 1, 2023. The *Plan* also satisfies those requirements established by the Maryland Department of the Environment's National Pollutant Discharge Elimination System (NPDES) MS4 permit.

The Division of Highways and Stormwater Management shall review the *Harford County Hickory II Highway Maintenance Facility Storm Water Pollution Prevention Plan* at a minimum of every three (3) years. Should any of the following conditions listed below occur, the personnel shall revise and reissue the *Plan* to the appropriate individuals and the Maryland Department of the Environment (MDE):

- Applicable laws are revised;
- The *Plan* fails in an emergency; or
- The facility changes in design or operation which results in an increased potential for fires, explosions, or release of hazardous waste.

All revisions to the *Harford County Hickory II Highway Maintenance Facility Storm Water Pollution Prevention Plan* shall be documented by providing the date and noting the section(s) which have been revised since its initial development.

Contents

SECTION 1: FACILITY DESCRIPTION AND CONTACT INFORMATION 4
1.1 Facility Information 4
1.2 Contact Information/Responsible Parties 5
1.3 Stormwater Pollution Prevention Team 6
1.4 Activities at the Facility 6
1.5 General Location Map 7
1.6 Facility Site Map 8
SECTION 2: POTENTIAL POLLUTANT SOURCES 9
2.1 Industrial Activity and Associated Pollutants 9
2.2 Spills and Leaks 9
2.3 Non-Stormwater Discharges Documentation 9
2.4 Salt Storage 10
2.5 Visual Monitoring Summary 10
2.6 PFAS and PCB Source Identification 10
SECTION 3: STORMWATER CONTROL MEASURES 10
3.1 Minimize Exposure 10
3.2 Good Housekeeping 11
3.3 Maintenance 12
3.4 Spill Prevention and Response 14
3.5 Erosion and Sediment Controls 15
3.6 Management of Runoff 15
3.7 Salt Storage Piles or Piles Containing Salt 15
3.8 20-SW Sector-Specific Non-Numeric Effluent Limits 16
3.9 Employee Training 17
3.10 Non-Stormwater Discharges 18
3.11 Waste, Garbage and Floatable Debris 18
3.12 Dust Generation and Vehicle Tracking of Industrial Materials 18
SECTION 4: SCHEDULES AND PROCEDURES FOR MONITORING 19
SECTION 5: INSPECTIONS 20

SECTION 6: SWPPP CERTIFICATION 21
SECTION 7: SWPPP MODIFICATIONS 22
SWPPP ATTACHMENTS.....24

SECTION 1: FACILITY DESCRIPTION AND CONTACT INFORMATION

1.1 Facility Information

Name of Facility: Harford County Hickory II Highway Maintenance Facility
Street: 1807 N Fountain Green Rd.
City: Bel Air State: MD ZIP Code: 21015
County: Harford
Permit Registration Number: 20SW1714 (Previous 12SW1714)

Latitude/Longitude (Use decimal format)
Latitude: Longitude:
39.576243º N (decimal) -76.337097º W (decimal)

Estimated area of industrial activity at site exposed to stormwater: 28.7 (acres)

Primary SIC Code or 2-letter Activity Code: 1611
(refer to Appendix A of the 20-SW)
Identify your applicable sector and subsector: Sector AD.a: Dept of Public Works and Highway Maintenance Facilities

Name and 8-digit identifier of the receiving water body: Thomas Run; 02120202
Are any of your discharges directly into any segment of an "impaired" water? ☐ Yes ☒ No
If Yes, identify name of the impaired water (and segment, if applicable):
Identify the pollutant(s) causing the impairment
For pollutants identified, which do you have reason to believe will be present in your discharge?
N/A
For pollutants identified, which have a completed TMDL? N/A
Do you discharge into a high quality receiving water designated as a Tier 2 water? ☒ Yes ☐ No
Do you discharge into a high quality receiving water designated as Use III or Use IV ☒ Yes ☐ No

1.2 Contact Information/Responsible Parties

Facility Operator:
Name: Rich Burcham
Address: 1807 N Fountain Green Rd.
City, State, Zip Code: Bel Air, MD 21015
Telephone Number: (410) 638-3279 x7948
Email address: rlburcham@harfordcountymd.gov
Fax number: (410) 638-3072

Facility Owner:
Name: Harford County Government
Address: 220 S Main St
City, State, Zip Code: Bel Air, MD 21014
Telephone Number: (410) 879-2000
Email address: CountyExecutive@harfordcountymd.gov
Fax number: (410) 638-1387

SWPPP Contact:
Name: Richard Wise
Telephone number: (410) 638-3217 X2446
Email address: rhwise@harfordcountymd.gov
Fax number: (410) 879-8439

1.3 Stormwater Pollution Prevention Team

	NAME	TITLE	PHONE NUMBER	RESPONSIBILITIES
NPDES Program Manager	Danielle Hankins	Administrator	410-638-3217 X1176	Overseeing NPDES Program
Leader	Rich Burcham	Supervisor	410-638-3279 x7948	Overseeing activities occurring at the Hickory II Highway Maintenance Facility Implementing BMPs Evaluating BMPs to measure effectiveness of plan Training
Member	Bill Griffith	Superintendent	410-638-3279 x7917	Monitoring Site Inspections Training
Member	Daniel Aubel	Equipment Repair Specialist	410-638-3208	Monitoring Site Inspections Training
Member	Richard Wise	Watershed Restoration Specialist	410-638-3217 X2446	Site assessments Identification of pollutant sources and risks SWPPP Preparation

1.4 Activities at the Facility

The Hickory II Highway Maintenance Facility is located at 1807 N. Fountain Green Road, Bel Air, Maryland 21015. The Hickory II Highway Maintenance Facility serves as a fueling site, provides vehicle and equipment maintenance services and stores materials such as salt, sand, traffic paint and herbicide essential in ensuring the safety of motorists traveling Harford County roadways.

1.5 General Location Map

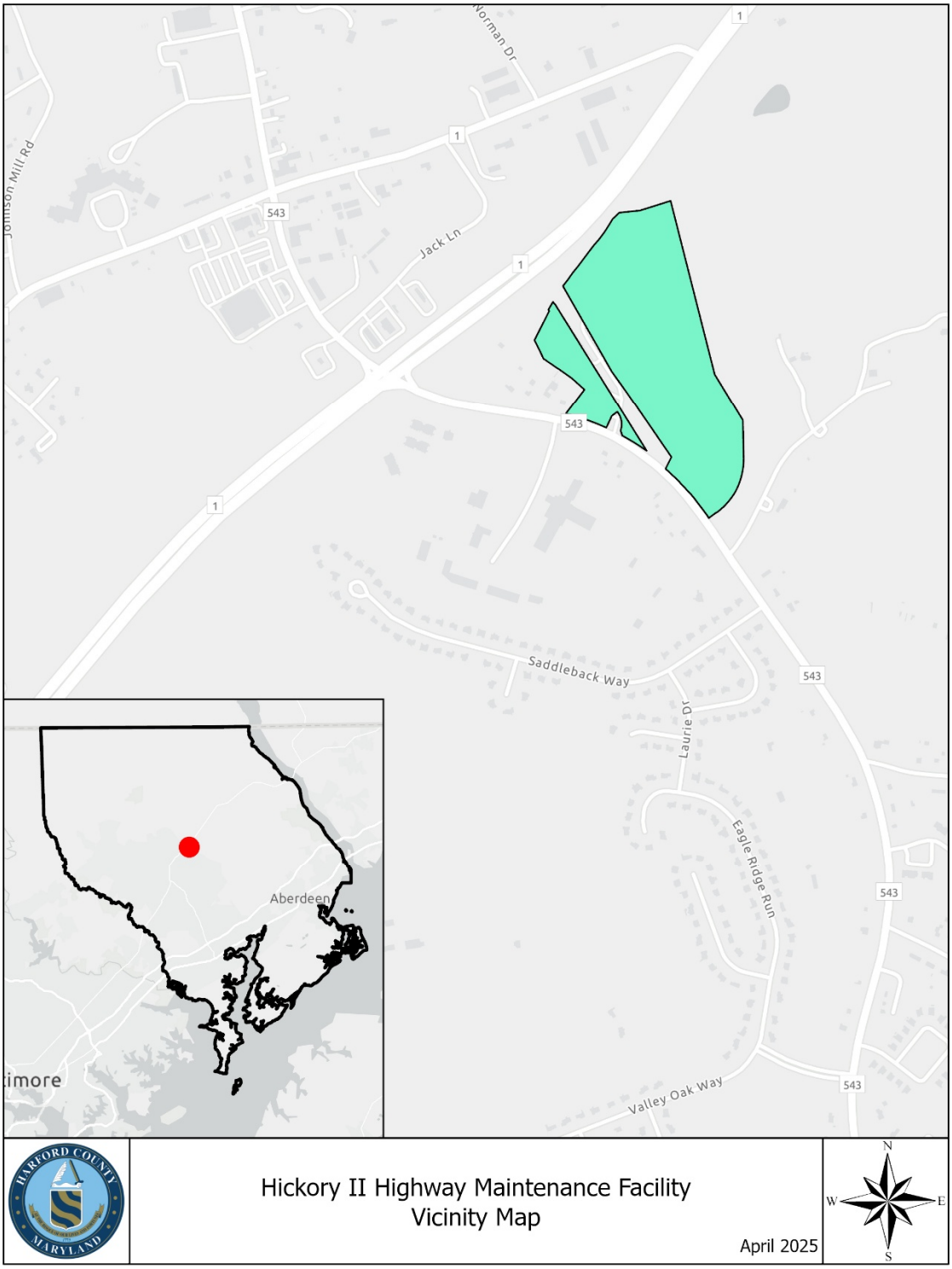

1.6 Facility Site Map

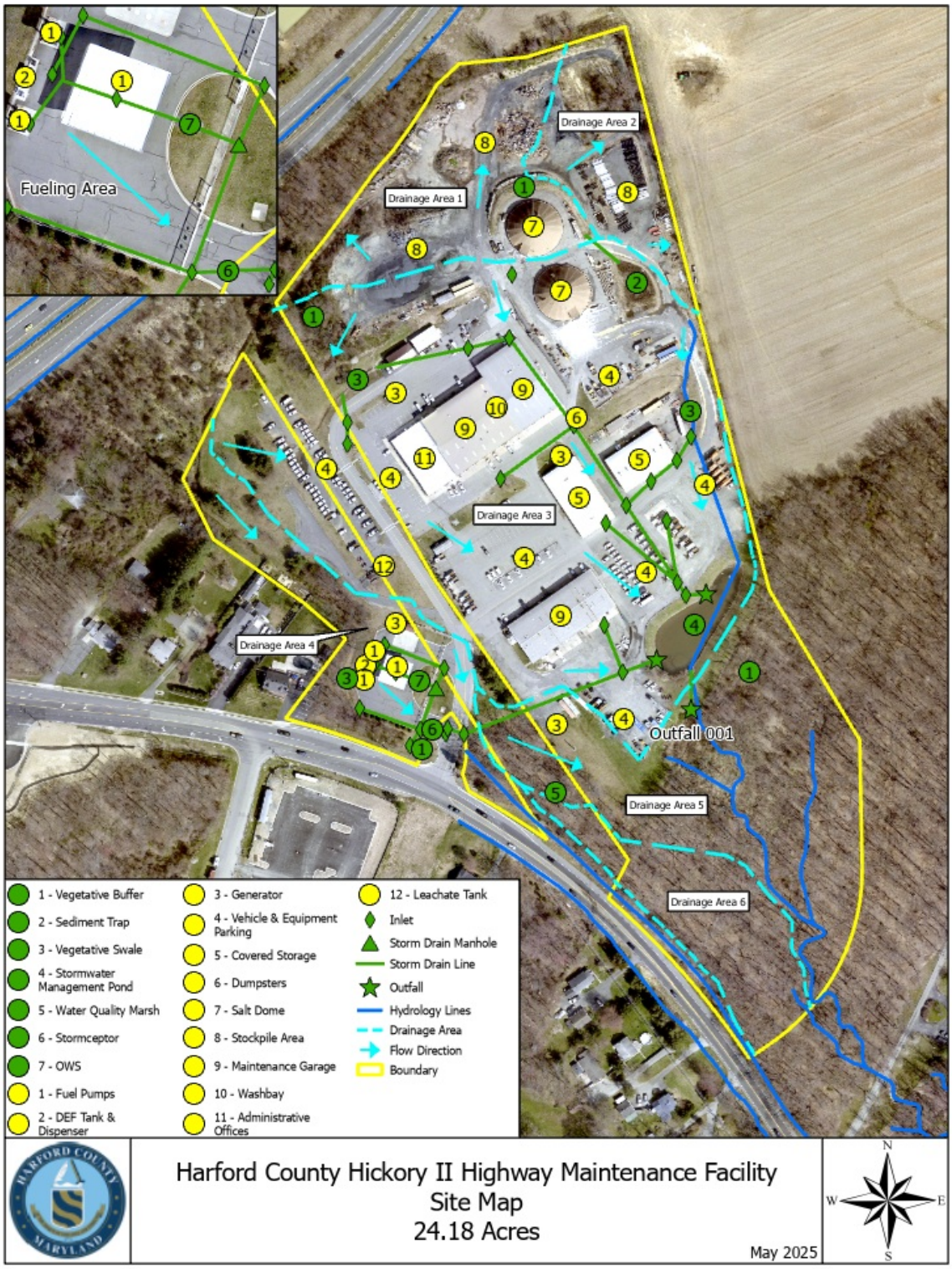

SECTION 2: POTENTIAL POLLUTANT SOURCES

2.1 Industrial Activity and Associated Pollutants

Industrial Activity	Associated Pollutants
Material storage – Indoors First Vehicle	Oil (heat transfer, hydraulic, motor, used), transmission fluid
Material storage – Indoors Highways	Fertilizer, grease, motor oil, paint, traffic paint, herbicide, solvents, liquid brine
Material storage – Outdoors	Aggregate, topsoil
Fueling Station	Fuel (unleaded and diesel)
Salt Dome	Salt
Accidental Spills and Leaks	Diesel Fuel (generators); Leachate Tank

2.2 Spills and Leaks

Areas of Site Where Potential Spills/Leaks Could Occur

Location	Outfalls
Fueling Station:	Grit Chamber/Oil-Water Separator/Stormceptor
Salt Dome	Overland Flow
Aggregate, topsoil, outdoor storage	Overland Flow
Parking lots	Outfall 001
Generators	Overland Flow
Leachate Tank	Overland Flow

Description of Past Spills/Leaks

Date	Description	Outfalls
	none	

2.3 Non-Stormwater Discharges Documentation

Date	Method	Discharge noted	Corrective Action
	Visual Inspection	None	

2.4 Salt Storage

Two salt storage domes are located onsite on asphalt pads. One dome drains to a sediment trap. The other dome drains to a vegetative buffer.

2.5 Visual Monitoring Summary

Monthly visual inspections were performed during the last permit period.

2.6 PFAS and PCB Source Identification

There are no known sources of PFAS or PCB at the Hickory II Highway Maintenance Facility.

SECTION 3: STORMWATER CONTROL MEASURES

3.1 Minimize Exposure

Indoor Storage Areas

Storage of materials used for various operations such as equipment maintenance and road painting in containers and/or in environments that are not susceptible to storm water exposure.

First Vehicle Indoor Storage

Material	Purpose and/or Location	Quantity Stored (Maximum)	Likelihood of contact with storm water.
Oil, Heat Transfer	Used for vehicles and equipment.	55 Gallons	There is no likelihood of heat transfer oil encountering stormwater since it is stored in steel drums under cover
Oil, Hydraulic	Used for vehicles and equipment.	250 Gallons	There is no likelihood of heat hydraulic oil encountering stormwater since it is stored in double walled steel aboveground storage tank and is equipped with a site gauge.
Oil, Motor	Used for vehicles and equipment.	220 Gallons	There is no likelihood of motor oil encountering stormwater since it is stored in single walled plastic above ground storage tank visibly monitored.
Oil, Motor	Used for vehicles and equipment.	250 Gallons	There is no likelihood of motor oil encountering stormwater since it is stored in single walled steel aboveground storage tank and is equipped with a site gauge.
Oil, Motor	Used for vehicles and equipment.	500 Gallons	There is no likelihood of motor oil encountering stormwater since it is stored in double walled steel aboveground storage tank and is equipped with a site gauge.
Motor Oil, Used		250 Gallons	There is no likelihood of used motor oil encountering stormwater since it is stored in single walled tank and is equipped with a site gauge.
Transmission fluid	Used for vehicles and equipment.	250 Gallons	There is no likelihood of transmission fluid encountering stormwater since it is stored in double walled steel tank and is equipped with a site gauge.

Highways Indoor Storage

Material	Purpose and/or Location	Quantity Stored (Maximum)	Likelihood of contact with storm water.
Fertilizer	Used for landscaping	40 Gallons	None. Items are properly labeled and stored on shelves in the storeroom.
Grease	Used for the lubrication of equipment	30 Pounds	There is no likelihood of grease encountering stormwater since all lubrication of equipment occurs indoors.
Oil, Motor	Used for equipment.	12 Quarts	There is no likelihood of motor oil encountering stormwater since its usage occurs indoors.
Paint, Marking	Used for maintenance purposes.	1,920 Ounces	There is no likelihood of paint encountering stormwater since the application of paint occurs in dry conditions and dries in minutes.
Paint, Traffic	Used for demarcating roadways	3,500 Gallons	There is no likelihood of paint encountering stormwater since the application of paint occurs in dry conditions and dries in minutes.
Herbicide	Used as an herbicide	4 Gallons	There is minimal likelihood of herbicide encountering stormwater. The utilization of herbicide is under controlled conditions and utilizes Best Management Practices resulting in little or no exposure to stormwater.
Solvents	Used for cleaning equipment parts	180 Gallons	There is no likelihood of solvents encountering stormwater since they are used indoors.

3.2 Good Housekeeping

The Hickory II Highway Maintenance Facility has implemented the following good housekeeping measures listed below:

Operation and Maintenance

- Maintain dry and clean floors and ground surfaces by using brooms, shovels, vacuum cleaners, or cleaning machines.
- Regularly pick up and dispose of garbage and waste material.
- Make sure equipment is working properly.
- Routinely inspect for leaks or conditions that could lead to discharges of chemicals or contact of storm water with raw materials, intermediate materials, waste materials, or products.
- Make sure outside areas are kept in a neat and orderly condition.
- Implement weekly housekeeping inspections.
- Ensure that spill cleanup procedures are understood by employees.

Material Storage Practices

- Provide adequate aisle space to facilitate material transfer and easy access for inspections.
- Store containers, drums, and bags away from direct traffic routes to prevent accidental spills.
- Stack containers according to manufacturers' instructions to avoid damaging the containers from improper weight distribution.
- Store containers on pallets or similar devices to prevent corrosion of the containers due to contact with moisture on the ground3

- Assign the responsibility of hazardous material inventory to a limited number of people who are trained to handle hazardous materials.

Material Inventory Procedures

- Identify all chemical substances present in the workplace.
- Label all containers to show the name and type of substance, stock number, expiration date, health hazards, suggestions for handling, and first aid information.
- Clearly mark on the inventory hazardous materials that require special handling, storage, use, and disposal considerations.
- Ensure storage areas are designed to contain spills.
- Implement a shelf-life program which can reduce waste that results from overstocking and allows for the disposal of outdated materials.

Employee Participation

- Incorporate information sessions on good housekeeping practices into the facility's employee training program.
- Discuss good housekeeping at employee meetings.
- Post bulletin boards with updated good housekeeping procedures, tips, and reminders.

3.3 Maintenance

The Hickory II Highway Maintenance Facility implemented the following Preventative Maintenance measures and conducts inspections as noted below.

STC 900 Precast Concrete Stormceptor

- Maintenance of the stormceptor shall include the removal of accumulated sediment when the depth exceeds eight inches, or, at a minimum, annually.
- Maintenance of the stormceptor shall take place immediately in the event of any hazardous material spill.

A licensed waste hauler shall perform maintenance on the stormceptor and the waste shall be properly disposed of. The appropriate regulatory agencies shall be notified as required.

Combination Grit Chamber and Oil/Water Separator

- Maintenance of the separator shall include the removal of oil and accumulated sediment before it exceeds 50 percent capacity, or, at a minimum, annually.

A licensed waste hauler shall perform maintenance to the combination grit chamber and oil/water separator and the waste shall be properly disposed of.

Leachate Tank

Inspection and maintenance are performed for the Bureau of Solid Waste Services by the Maryland Environmental Service (MES) through an intergovernmental agreement. Maintenance of the leachate tank is as follows:

- Cleaning and maintenance of the basket strainer on the inlet piping after each use
- Monthly inspection of the level gauge
- Monthly inspection of the exterior coating and periodic painting as needed
- Monthly inspection of the outlet piping
- Inspection and cleaning of the tank interior as needed, minimum every 5 years
- Cleaning of the outlet piping and orifice plate as needed, minimum every 5 years

MES is responsible for any required remediation efforts related to spills and leaks associated with the leachate tank.

Stormwater Management Pond

- Maintenance of the stormwater pond shall consist of biannual visual inspections of all components of the stormwater management pond performed by Harford County stormwater management personnel in March and September.
- Grass on the dam and non-wetland portions shall be mowed any time the grass is over six inches tall.
- Maintenance of vegetative cover shall consist of mowing, liming and fertilizing.
- At a minimum, lime and fertilizer shall be applied once every two years.
- There shall be no planting of trees or woody vegetation on the embankment.
- Rills on the slopes of the dam shall be filled and thoroughly compacted with suitable materials. These areas shall be reseeded or resodded, limed and fertilized as needed. Fences, gates and all appurtenances shall be kept in good repair and free of trash.

Deterioration of pipe, riser or embankment shall be reported to the Harford County Department of Public Works at (410) 638-3545 as soon as discovered and prior to repair. Harford County or Harford County's representative shall perform all required maintenance, at Harford County's expense.

Water Quality Marsh

- Inspect banks for settlement and erosion on an annual basis and after large storm events.
- Inspect the forebay for accumulated sediment as needed.
- Perform mowing and trimming operations as needed.
- Remove trees and woody vegetation on banks as needed.
- Remove trash and debris as needed.
- Perform erosion control as needed.

Vegetative Areas

- Personnel shall conduct inspections of the permanent vegetative stabilization area around the salt domes to determine if repairs, replacements and reseedings are necessary.

Employee Participation

- Schedule monthly Maintenance Inspections.
- Implement a schedule to adjust, repair, or replace equipment or systems in a regular or timely manner.
- Promptly repair defective equipment found during inspections and testing.
- Inspect and test facility equipment and systems to uncover conditions that could cause breakdowns or failures resulting in discharges of pollutants to surface waters.
- Maintain records on Preventive Maintenance inspections.

3.4 Spill Prevention and Response

Upon inspection of the Hickory II Highway Maintenance Facility, the areas identified most susceptible to a spill were the fueling and storage areas. The fueling area is equipped with a stormceptor and an oil/water separator. Spill cleanup kits are also available at the pumps and storage areas to absorb and properly dispose of any spilled material.

Preventive measures implemented by Harford County to improve material handling procedures and storage include the following:

- Adopting effective housekeeping practices.
- Performing regular visual inspections to identify signs of wear on storage containers, equipment, etc.
- Performing preventive maintenance on equipment, tanks, etc.
- Using filling procedures for tanks and other equipment to minimize spills.
- Using material transfer procedures that reduce the chance of leaks or spills.
- Substituting less or non-toxic materials for toxic materials.
- Ensuring appropriate security.
- Developing ways to recycle, clean, and/or reuse process materials to reduce the volume brought into the facility.
- Installing leak detection devices, overflow controls, and diversion berms.

In the event of a spill, staff will follow the procedures listed below:

1. Identify the material, the source, and approximate quantity.
2. Attend to any individuals who are injured and contact 911 for further assistance if necessary.
3. Evaluate the potential for fires, explosions, etc.
4. If possible, stop the release to prevent the situation from worsening.
5. Contain the spill using pads, berms, ditches, etc.
6. Evaluate if the situation is an immediate threat to the life or health of fellow employees.

7. If the material has a Reportable Quantity (RQ) Requirement and the spill was in excess of the RQ amount, contact Emergency Response Agencies.
8. Prevent other humans or vehicles from coming into contact with the spill by sectioning off the area, posting a sign, or having someone guard the area.
9. Organize those individuals responsible for spill cleanup, review the situation with them, any hazards they may encounter, and ensure they are using proper equipment, protective clothing, following proper clean up, decontamination, and disposal procedures.
10. Dispose of contaminated absorbents and other supplies properly and decontaminate any equipment used in the clean-up process and dispose of contaminated absorbents and other supplies properly.

Harford County shall, after any spill, evaluate the Response Plan and make any necessary improvements to the Plan.

3.5 Erosion and Sediment Controls

Harford County maintains vegetative buffers, a storm water management pond and a water quality marsh to limit erosion at the Hickory II Highway Maintenance Facility. Harford County's Department of Public Works Storm Water Management staff conducts annual inspections to ensure proper maintenance of controls.

3.6 Management of Runoff

The following best management practices are installed at the Hickory II Highway Maintenance Facility:

Storm Water Management Pond

This is a wet extended detention facility. It manages the 10-year and 100-year storms, as required. The facility also provides full Channel Protection Volume and Water Quality Volume management.

Vegetative Areas

Vegetated areas receive runoff from the Salt Dome and the outdoor storage area of asphalt millings, aggregate and topsoil.

These facilities are inspected triennially as required by the County and MDE. Inspection reports are available from the County.

3.7 Salt Storage Piles or Piles Containing Salt

Hickory II Highway Maintenance Facility has two enclosed salt storage domes. The domes house approximately 10,000 tons of salt that is used for deicing operations. Good Housekeeping practices (sweeping, equipment maintenance) are employed to minimize exposure of salt to stormwater.

Runoff from the paved area is treated with vegetated swales and the stormwater management facility.

3.8 20-SW Sector-Specific Non-Numeric Effluent Limits

Within Sector AD.a. Department of Public Works and Highways Maintenance Facilities, the Specific Non-Numeric Effluent Limits are described in Sector P Transportation and Warehousing.

P.3 Additional Technology-Based Effluent Limits.

P.3.1 Good Housekeeping Measures

P.3.1.1 Vehicle and Equipment Storage Areas

P.3.1.2 Fueling Areas

The fueling area is covered to minimize exposure to stormwater. Spills are handled as described in Item 3.4 above.

P.3.1.3 Material Storage Areas

The material storage areas are handled as described in Item 3.2 above.

P.3.1.4 Vehicle and Equipment Cleaning Areas

P.3.1.5 Vehicle and Equipment Maintenance Areas

P.3.1.6 Locomotive Sanding

Not applicable.

P.4 Additional SWPPP Requirements

P.4.1 Drainage Area Site Map

The site map is provided in Section 1.6 above.

P.4.2 Potential Pollutant Sources

Potential Pollutant Sources are described in Items 2.1 and 2.2 above.

P.4.3 Description of Good Housekeeping Measures

Good Housekeeping Measures are described in Section 3.2 above.

P.5 Additional Inspection Requirements

Inspection procedures are described in Sections 3.2 and 3.3 above.

3.9 Employee Training

Hickory II Highway Maintenance Facility conducts the employee training programs described below and makes modifications as necessary to ensure all employees are properly educated of all measures contained in the pollution prevention plan. Employee training records shall be kept on file at the Hickory II Highway Maintenance Facility.

TRAINING TOPICS	BRIEF DESCRIPTION OF TRAINING PROGRAM / MATERIALS	SCHEDULE FOR TRAINING (LIST DATES)	ATTENDEES
SPILL PREVENTION AND RESPONSE Identifying potential spill areas and drainage routes; Procedures for reporting spills; Appropriate material handling procedures and storage requirements; Implementing spill response procedures	Videos and Posted Notices	Routine training to be conducted by Hickory II Highway Maintenance Facility staff	All shop employees
GOOD HOUSEKEEPING Regular vacuuming and/or sweeping; Prompt clean-up of spilled materials to prevent pollution run-off; Identify where brooms, vacuums, sorbents, foams, neutralizing agents, and other good housekeeping and spill response equipment are located; Instruction on securing drums and containers and frequently checking for leaks and spills; Outline a regular schedule for housekeeping activities	Safety Training Meetings	Monthly	All shop employees
MATERIAL MANAGEMENT PRACTICES Organize materials for storage; Identify all toxic and hazardous substances stored and handled on-site; Discuss handling procedures for all toxic and hazardous materials	Briefings	Monthly	All shop employees

3.10 Non-Stormwater Discharges

Non-stormwater discharges are addressed as described in Section 2.3 above.

3.11 Waste, Garbage and Floatable Debris

Waste, Garbage and Floatable Debris are addressed in Section 3.2 above.

3.12 Dust Generation and Vehicle Tracking of Industrial Materials

Good housekeeping measures on paved surfaces are employed to minimize dust generation.

SECTION 4: SCHEDULES AND PROCEDURES FOR MONITORING

Hickory II Highway Maintenance Facility does not have Benchmark Monitoring Requirements as described for Sector AD.a *Department of Public Works and Highways Maintenance Facilities***.** Stormwater from the Hickory II Highway Maintenance Facility discharges into Thomas Run, a tributary to Deer Creek, a Tier 2 waterway. There are no impairments to the receiving water.

Location	Frequency	Method	Responsible Person
Outfall 001	**Quarterly**	**Visual evaluation**	**Supervisor**

Once per quarter, a stormwater sample must be collected from the outfall in such a manner that it is representative of the stormwater discharge from that outfall. A quality storm event is any storm where there is measurable discharge. The sample(s) shall be collected in a colorless glass or plastic container and visually examined for the parameters listed on the Quarterly Visual Monitoring Form (Attachment D). The Quarterly Visual Monitoring Form shall be signed and dated by the person conducting the visual examination. A copy of the Quarterly Visual Monitoring Form shall be kept with the facility's SWPPP and be available when requested.

Should there be any indication of a pollutant, an inspection will be performed to determine the source of the pollutant and corrective actions will be taken to remove the source.

SECTION 5: INSPECTIONS

In addition to the quarterly visual monitoring of stormwater discharge, routine site inspections will be performed as described in Sections 3.2 and 3.3 above on a quarterly basis as required by the county's 20-SW permit. Annually, a comprehensive site evaluation (Attachment E) will be performed by qualified personnel. This inspection will include the following elements:

- Inspect storm water drainage areas for evidence of pollutants entering the drainage system.
- Evaluate the effectiveness of measures to reduce pollutant loadings and whether additional measures are needed.
- Observe structural measures, sediment controls, and other storm water BMPs to ensure proper operation.
- Inspect any equipment needed to implement the plan, such as spill response equipment.
- Revise the plan as needed within two weeks of inspection (potential pollutant source description and description of measures and controls);
- Implement any necessary changes in a timely manner, but at least within 12 weeks of the inspection.
- Prepare a report summarizing inspection results and follow up actions, the date of inspection and personnel who conducted the inspection; identify any incidents of noncompliance or certify that the facility is in compliance with the plan.
- Document all incidents of noncompliance in the inspection report. Where there are no incidents of noncompliance, the inspection report must contain a certification that the facility is in compliance with the plan.
- Sign the report and submit it with the plan.

SECTION 6: SWPPP CERTIFICATION

I certify under penalty of law that this document and all attachments were prepared under my direction or supervision in accordance with a system designed to assure that qualified personnel properly gathered and evaluated the information submitted. Based on my inquiry of the person or persons who manage the system, or those persons directly responsible for gathering the information, the information submitted is, to the best of my knowledge and belief, true, accurate, and complete. I am aware that there are significant penalties for submitting false information, including the possibility of fine and imprisonment for knowing violations.

Name: Danielle Hankins Title: Administrator

Signature: Danielle M Hankins
I am approving this document
2025.05.27 15:22:48-04'00' Date: 05.27.2025

SECTION 7: SWPPP MODIFICATIONS

Original Completion Date: June 2023

Revision Date: April 2024

Revisions:

- Section 1.3 Stormwater Pollution Prevention Team

Revision Date: May 2025

Revisions:

- Overall reformatting and grammar corrections
- Section 1.1 Facility Information
  - Added name of receiving body of water
- Section 1.2 Contact Information/Responsible Parties
  - Updated SWPPP contact
- Section 1.3 Stormwater Pollution Prevention Team
  - Updated Administrator
  - Updated Watershed Restoration Specialist
- Section 1.5 General Location Map
  - Updated General Location Map
- Section 1.6 Facility Site Map
  - Revised drainage areas
  - Relabeled drainage areas
  - Removed leachate tank as a BMP
  - Added vegetative swale as a BMP
  - Revised labels for BMPs
  - Added DEF tank and dispenser as possible pollutant source
  - Added vehicle and equipment parking areas as possible pollutant source
  - Added leachate tank as possible pollutant source
  - Revised labels for possible pollutant sources
  - Corrected locations of inlets
  - Added storm drain line
- Section 2.1 Industrial Activity and Associated Pollutants
  - Added accidental spills and leaks for the facility's generators and leachate tank
- Section 2.2 Spills and Leaks – Areas of Site Where Potential Spills/Leaks Could Occur
  - Added stormceptor as destination for fueling station
  - Added generators and leachate tank

- Section 3.1 Minimize Exposure – Indoor Storage Areas – First Vehicle Indoor Storage and Highway Indoor Storage
    - Removed column for quantity used
    - Removed column for quantity produced
    - Removed column for quantity exposed in last three years
    - Removed column for past significant spill or leak
    - Updated column for quantity stored to represent the maximum amount of product to be stored at any given time
    - Removed Oil-dri
- Section 3.3 Maintenance – Leachate Tank
    - Added language regarding Maryland Environmental Service being responsible for leachate tank inspections and maintenance and remediation related to any spills or leaks associated with the tank as part of its intergovernmental agreement with Harford County Bureau of Solid Waste Services
- Section 4 Schedules and Procedures for Monitoring
    - Revised language regarding the collection of the quarterly visual monitoring samples
- SWPPP Attachments
    - Updated Attachment A – General Location Map included as an 11”x17” map
    - Updated Attachment B – Site Map included as an 11”x17” map
    - Included Attachment D – Quarterly Visual Monitoring Form
    - Included Attachment E – EPA Annual Reporting Form

SWPPP ATTACHMENTS

Attachment A – General Location Map

Attachment B – Site Map

Attachment C – General Permit 20-SW

Attachment D – Quarterly Visual Monitoring Form

Attachment E – EPA Annual Reporting Form

Attachment A – General Location Map

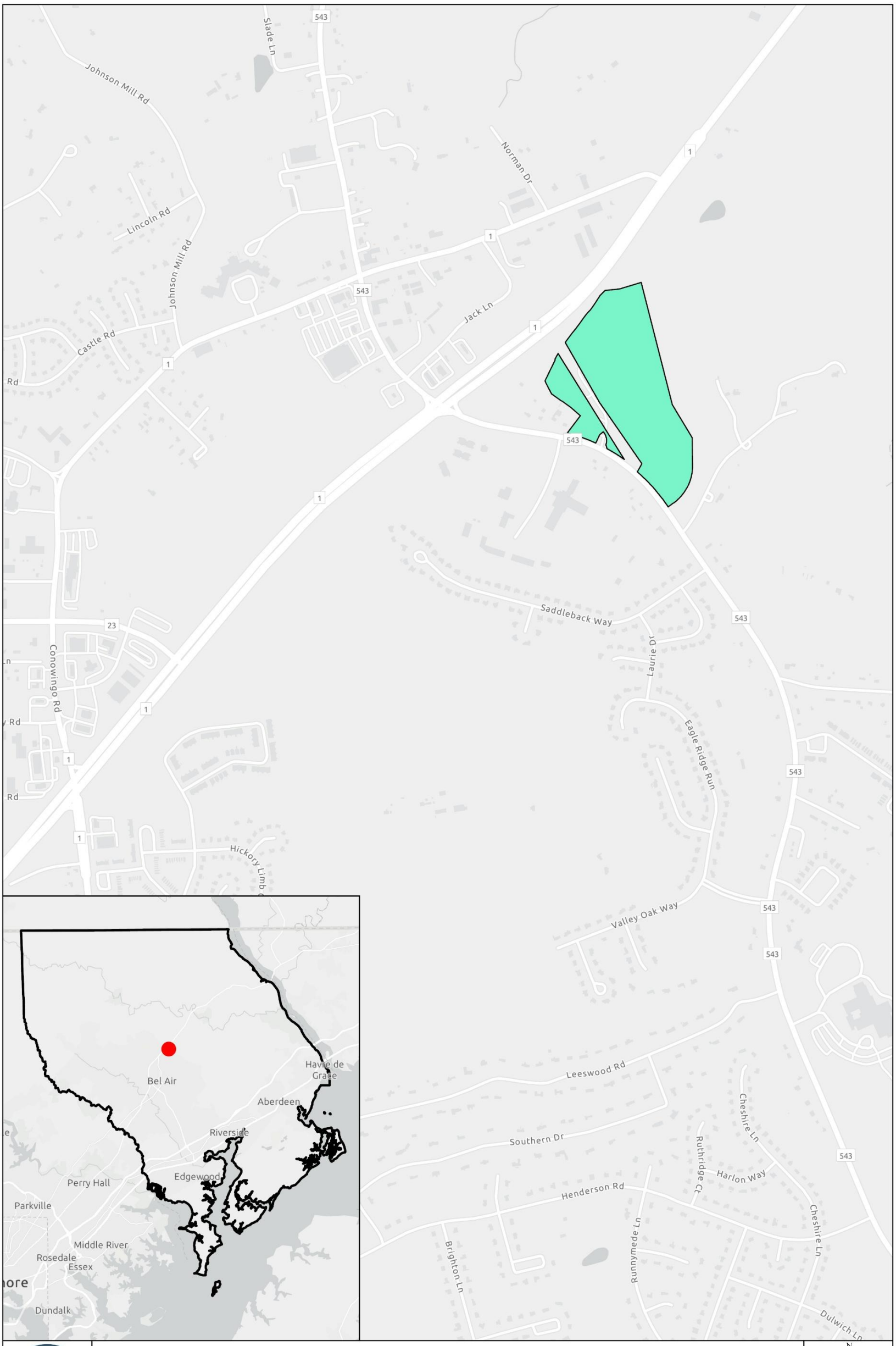

Attachment B – Site Map

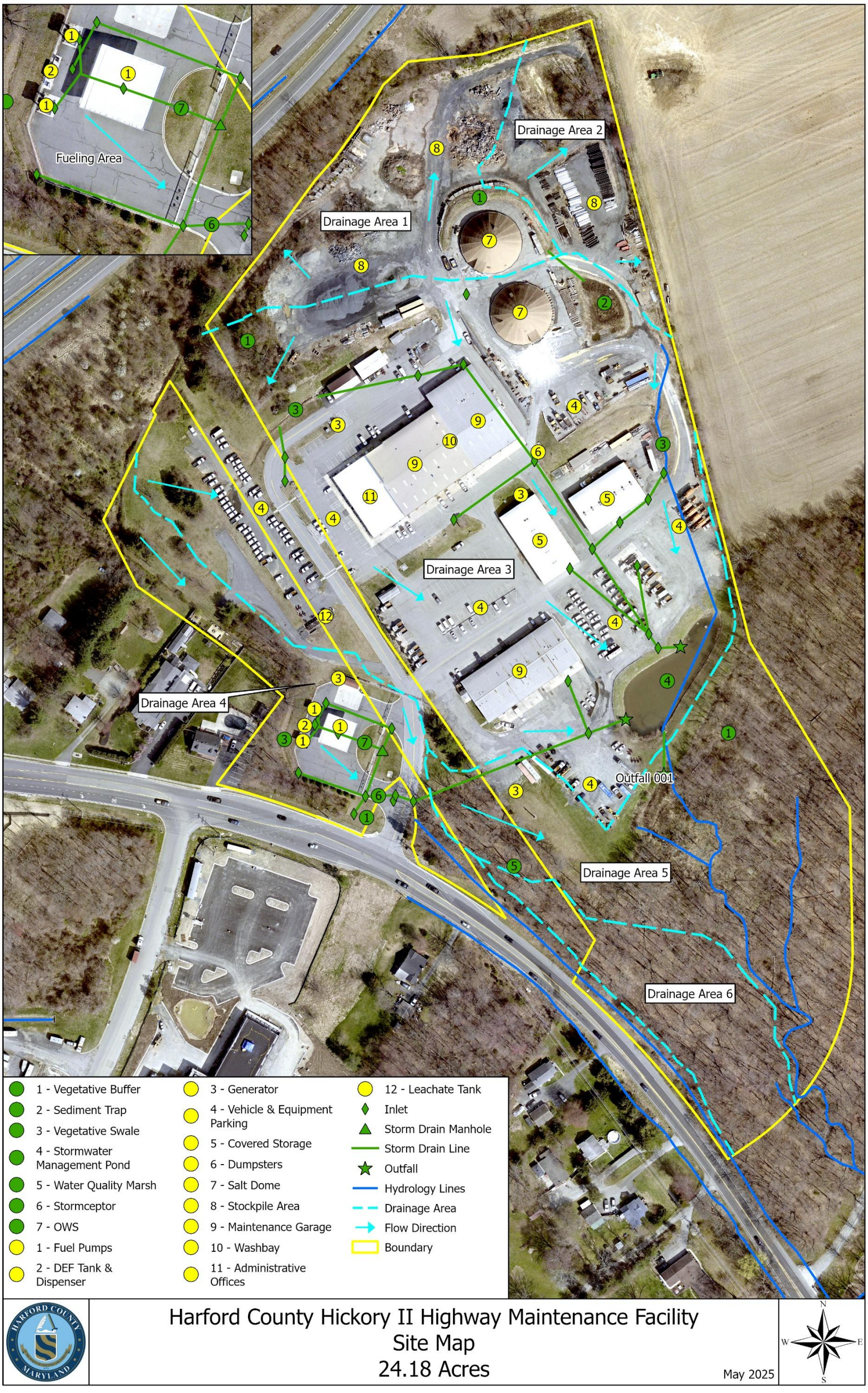

Attachment C – General Permit 20-SW

Attachment D – Quarterly Visual Monitoring Form

Quarterly Visual Monitoring Form

Fill out a separate form for each outfall sampled.

Sample Location					
Quarter / Year:		**Date / Time Collected:**		**Date / Time Examined:**	
Qualifying Storm Event?	Yes No	**Runoff Source:**	Rainfall Snowmelt		
Collector's Name & Title					
Examiner's Name & Title					

Parameter	Parameter Description	Parameter Characteristics
1. Color	Does the stormwater appear to have any color? **Yes** **No (Clear)**	If Yes, describe: *Yellow* *Brown* *Red* *Gray* *Other*:
2. Clarity	Is the stormwater not clear? **Yes** **No**	If not clear, which of the following best describes the clarity of the stormwater? *Suspended Solids* *Milky/Cloudy* *Opaque* *Other :*
3. Oil Sheen	Can you see a rainbow effect or sheen on the water surface? **Yes** **No**	Which best describes the sheen? *Rainbow sheet* *Floating oil globules* *Other :*
4. Odor	Does the sample have an odor? **Yes** **No**	If Yes, describe: *Chemical* *Musty* *Rotten Eggs* *Sewage* *Sour Milk* *Oil/Petroleum* *Other :*
5. Floating Solids	Is there anything on the surface of the sample? **Yes** **No**	If Yes, describe: *Suds* *Oily Film* *Garbage* *Sewage* *Water Fowl Excrement* *Other :*
6. Suspended Solids	Is there anything suspended in the sample? **Yes** **No**	Describe:
******Leave sample undisturbed for 30 minutes.******		
7. Settled Solids	Is there anything settled on the bottom of the sample? **Yes** **No**	Describe: (*note type, size and material after sample is not disturbed for 30 minutes)*
8. Foam	Does foam or material form on the top of the sample surface if you shake it? **Yes** **No**	Describe:

9. If there are any visible indicators of pollution identify (1) where the pollution may come from and (2) any corrective actions taken.

Stormwater Collector's Signature and Date:

Stormwater Examiner's Signature and Date:

Note – Sample should be collected and analyzed in a colorless glass or plastic bottle.

Instructions for Completing the Visual Monitoring Form

Per PART V. INSPECTIONS, MONITORING, AND REPORTING, you must collect a stormwater sample from each outfall once each quarter for the entire permit term and conduct a visual assessment of each sample. You must follow the monitoring procedures outlined in Part V.C. These samples should be collected in such a manner that they are representative of the stormwater discharge from that outfall. Each assessment must be kept onsite with your SWPPP and available for inspection and review by the Department at anytime.

First, fill out all information on the top of the visual monitoring form. A qualifying storm event is any storm where there is a measurable discharge. Then, take a grab sample in a clear container. Evaluate the sample in a well-lit area for the following parameters:

1. **Color:** Record the best description of the sample color in the appropriate space on the form.
2. **Clarity**: This parameter refers to how cloudy the sample is. It is *usually* an indication of fewer pollutants in the water if the sample is clear or transparent. If the clarity has changed since the last sample, try to identify what might have caused this to happen.
   - **Clear** – Sample doesn't block any light; can be seen through regardless of color.
   - **Cloudy** – Sample blocks some light; objects not clear but can be identified looking through the sample.
   - **Very Cloudy** – Sample blocks most light; objects cannot be identified looking through the sample.
   - **Opaque** – Sample blocks all light; objects cannot be seen when looking through the sample.
3. **Oil Sheen:** Record whether or not an oil sheen is present. If a film of iridescent color is noted on the surface of the sample or a rainbow effect appears to be floating on the surface of the water, this usually indicates oil is present.
4. **Odor:** If sample has no odor other than natural rainwater or snowmelt, write "NO" on the visual monitoring form. Note the presence of any of the following odors if detected, such as gasoline, diesel, oil, solvents (WD-40, other petroleum products, etc.), garbage, fishy, sweet/sugary, any other unusual odors not normally present in clean runoff from the area sampled.
5. **Floating Solids:** A contaminated flow may contain solids or liquids floating on the surface. Identifying floatables can aid in finding the source of the contamination. Examples of floatables are spoiled food products, oils, plant parts, solvents, sawdust, foams and fuel. Give a general description of the type of floating solids present (wood chips, leaf debris, algae, etc) in the general comments section for each sample. Identify amount of floating solids as described below.
   - **High** – More than 20% of the surface of the sample is covered with floating solids.
   - **Moderate** – Less than 20% of the surface of the sample is covered with floating solids.
   - **Slight** – Only a few floating particles observed on the surface of the sample.
   - **None** – No floating solids present on the surface of the sample.
6. **Suspended solids:** Record whether or not suspended solids are present in the sample. Suspended solids are particles floating inside the column of water, not on top, and may contribute to changes in water color or clarity. Cracked or deteriorated concrete or peeling surface paint at an outfall usually indicates the presence of severely contaminated discharges. Contaminants causing this type of damage are usually very acidic or basic.

---------- WAIT 30 MINUTES ----------

Leave the sample undisturbed for 30 minutes to allow the water and anything in it to settle.

7. **Settled Solids:** After 30 minutes has passed, give a general description of the type of settled solids present (sand, decayed plant matter, rust particles, etc.) in the general comments section.
8. **Foam:** After completing #7, shake the bottle gently. Record foam results on the form as they most closely match one of the descriptions listed below.
   - **None** – Most bubbles break down within ten (10) seconds of shaking; only a few large bubbles persist longer than ten (10) seconds.
   - **Moderate** – Many small bubbles are present but these bubbles persist for less than two (minutes) after shaking.
   - **High** – Many small bubbles are present and they persist longer than two (2) minutes after shaking.
9. Detail any concerns, corrective actions taken and any other indicators of pollution present in the sample. This should include the identified source if there are visible indicators present in the sample. The person performing test must sign and date each form**.**

Attachment E – EPA Annual Reporting Form

NPDES Permit Tracking No.:

UNITED STATES ENVIRONMENTAL PROTECTION AGENCY
WASHINGTON, DC 20460

Annual Reporting Form

A. GENERAL INFORMATION

1. Facility Name:

2. NPDES Permit Tracking No.:

3. Facility Physical Address:

a. Street:

b. City: c. State: d. Zip Code: -

4. Lead Inspectors Name: Title:

Additional Inspectors Name(s):

5. Contact Person: Title:

Phone: - - Ext. E-mail:

6. Inspection Date : / /

B. GENERAL INSPECTION FINDINGS

1. As part of this comprehensive site inspection, did you inspect all potential pollutant sources, including areas where industrial activity may be exposed to stormwater?
☐ YES ☐ NO

If NO, describe why not:

NOTE: *Complete Section C of this form for each industrial activity area inspected and included in your SWPPP or as newly identified in B.2 or B.3 below where pollutants may be exposed to stormwater.*

2. Did this inspection identify any stormwater or non-stormwater outfalls not previously identified in your SWPPP? ☐ YES ☐ NO

If YES, for each location, describe the sources of those stormwater and non-stormwater discharges and any associated control measures in place:

NPDES Permit Tracking No.:

3. Did this inspection identify any sources of stormwater or non-stormwater discharges not previously identified in your SWPPP? ☐ YES ☐ NO

If YES, describe these sources of stormwater or non-stormwater pollutants expected to be present in these discharges, and any control measures in place:

4. Did you review stormwater monitoring data as part of this inspection to identify potential pollutant hot spots? ☐ YES ☐ NO ☐ NA, no monitoring performed

If YES, summarize the findings of that review and describe any additional inspection activities resulting from this review:

5. Describe any evidence of pollutants entering the drainage system or discharging to surface waters, and the condition of and around outfalls, including flow dissipation measures to prevent scouring:

6. Have you taken or do you plan to take any corrective actions, as specified in Part 3 of the permit, since your last annual report submission (or since you received authorization to discharge under this permit if this is your first annual report), including any corrective actions identified as a result of this annual comprehensive site inspection?

☐ YES ☐ NO

If YES, how many conditions requiring review for correction action as specified in Parts 3.1 and 3.2 were addressed by these corrective actions? ☐☐

NOTE: *Complete the attached Corrective Action Form (Section D) for each condition identified, including any conditions identified as a result of this comprehensive stormwater inspection.*

NPDES Permit Tracking No.:

C. INDUSTRIAL ACTIVITY AREA SPECIFIC FINDINGS

Complete one block for each industrial activity area where pollutants may be exposed to stormwater. Copy this page for additional industrial activity areas.

In reviewing each area, you should consider:

- Industrial materials, residue, or trash that may have or could come into contact with stormwater;
- Leaks or spills from industrial equipment, drums, tanks, and other containers;
- Offsite tracking of industrial or waste materials from areas of no exposure to exposed areas; and
- Tracking or blowing of raw, final, or waste materials from areas of no exposure to exposed areas.

INDUSTRIAL ACTIVITY AREA _____:

1. Brief Description**:**

2. Are any control measures in need of maintenance or repair? ☐ YES ☐ NO

3. Have any control measures failed and require replacement? ☐ YES ☐ NO

4. Are any additional/revised control measures necessary in this area? ☐ YES ☐ NO

If YES to any of these three questions, provide a description of the problem: (Any necessary corrective actions should be described on the attached Corrective Action Form)

INDUSTRIAL ACTIVITY AREA _____:

1. Brief Description:

2. Are any control measures in need of maintenance or repair? ☐ YES ☐ NO

3. Have any control measures failed and require replacement? ☐ YES ☐ NO

4. Are any additional/revised c necessary in this area? ☐ YES ☐ NO

If YES to any of these three questions, provide a description of the problem: (Any necessary corrective actions should be described on the attached Corrective Action Form)

INDUSTRIAL ACTIVITY AREA _____:

Brief Description:

2. Are any control measures in need of maintenance or repair? ☐ YES ☐ NO

3. Have any control measures failed and require replacement? ☐ YES ☐ NO

4. Are any additional/revised BMPs necessary in this area? ☐ YES ☐ NO

If YES to any of these three questions, provide a description of the problem: (Any necessary corrective actions should be described on the attached Corrective Action Form)

NPDES Permit Tracking No.:

NOTE: *Copy this page and attach additional pages as necessary*

INDUSTRIAL ACTIVITY AREA _____:

1. Brief Description:

2. Are any control measures in need of maintenance or repair? ☐ YES ☐ NO

3. Have any control measures failed and require replacement? ☐ YES ☐ NO

4. Are any additional/revised BMPs necessary in this area? ☐ YES ☐ NO

If YES to any of these three questions, provide a description of the problem: (Any necessary corrective actions should be described on the attached Corrective Action Form)

INDUSTRIAL ACTIVITY AREA _____:

1. Brief Description:

2. Are any control measures in need of maintenance or repair? ☐ YES ☐ NO

3. Have any control measures failed and require replacement? ☐ YES ☐ NO

4. Are any additional/revised BMPs necessary in this area? ☐ YES ☐ NO

If YES to any of these three questions, provide a description of the problem: (Any necessary corrective actions should be described on the attached Corrective Action Form)

INDUSTRIAL ACTIVITY AREA _____:

1. Brief Description:

2. Are any control measures in need of maintenance or repair? ☐ YES ☐ NO

3. Have any control measures failed and require replacement? ☐ YES ☐ NO

4. Are any additional/revised BMPs necessary in this area? ☐ YES ☐ NO

If YES to any of these three questions, provide a description of the problem: (Any necessary corrective actions should be described on the attached Corrective Action Form)

NPDES Permit Tracking No.:

D. CORRECTIVE ACTIONS

Complete this page for each specific condition requiring a corrective action or a review determining that no corrective action is needed. Copy this page for additional corrective actions or reviews.

Include both corrective actions that have been initiated or completed since the last annual report, and future corrective actions needed to address problems identified in this comprehensive stormwater inspection. Include an update on any outstanding corrective actions that had not been completed at the time of your previous annual report.

1. Corrective Action # ____ of ____ for this reporting period.

2. Is this corrective action:

- ☐ An update on a corrective action from a previous annual report; or
- ☐ A new corrective action?

3. Identify the condition(s) triggering the need for this review:

- ☐ Unauthorized release or discharge
- ☐ Numeric effluent limitation exceedance
- ☐ Control measures inadequate to meet applicable water quality standards
- ☐ Control measures inadequate to meet non-numeric effluent limitations
- ☐ Control measures not properly operated or maintained
- ☐ Change in facility operations necessitated change in control measures
- ☐ Average benchmark value exceedance
- ☐ Other (describe): _____

4. Briefly describe the nature of the problem identified:

5. Date problem identified: __/__/____

6. How problem was identified:

- ☐ Comprehensive site inspection
- ☐ Quarterly visual assessment
- ☐ Routine facility inspectio
- ☐ Benchmark monitoring
- ☐ Notification by EPA or State or local authorities
- ☐ Other (describe): _____

7. Description of corrective action(s) taken or to be taken to eliminate or further investigate the problem (e.g., describe modifications or repairs to control measures, analyses to be conducted, etc.) or if no modifications are needed, basis for that determination:

8. Did/will this corrective action require modification of your SWPPP? ☐ YES ☐ NO

9. Date corrective action initiated: __/__/____

10. Date correction action completed: __/__/____ or expected to be completed: __/__/____

11. If corrective action not yet completed, provide the status of corrective action at the time of the comprehensive site inspection and describe any remaining steps (including timeframes associated with each step) necessary to complete corrective action:

NPDES Permit Tracking No.:

E. ANNUAL REPORT CERTIFICATION

1. Compliance Certification

Do you certify that your annual inspection has met the requirements of Part 4.2 of the permit, and that, based upon the results of this inspection, to the best of your knowledge, you are in compliance with the permit? ☐ YES ☐ NO

If NO, summarize why you are not in compliance with the permit:

2. Annual Report Certification

I certify under penalty of law that this document and all attachments were prepared under my direction or supervision in accordance with a system designed to assure that qualified personnel properly gathered and evaluated the information submitted. Based on my inquiry of the person or persons who manage the system, or those persons directly responsible for gathering the information, the information submitted is, to the best of my knowledge and belief, true, accurate, and complete. I am aware that there are significant penalties for submitting false information, including the possibility of fine and imprisonment for knowing violations.

Authorized Representative Printed Name: Title:

Signature: Date Signed:

Harford County

Jarrettsville

Highway Maintenance Facility

Stormwater Pollution Prevention Plan

June 2023

Revised April 2024
Revised May 2025

Submitted by:

Harford County Government
Department of Public Works
Division of Highways and Stormwater Management

Facility Operator:
Bill Williams, Supervisor
wpwilliams@harfordcountymd.gov
(410)692-7878 x7686

Facility Location:
1348 Cooptown Rd
Forest Hill, MD 21050

Robert G. Cassilly
Harford County Executive

Robert S. McCord
Director of Administration

Joseph J. Siemek, P.E
Director of Public Works

Steven A. Walsh, P.E.
Deputy Director of Public Works

FOREWORD

The Harford County Department of Public Works Division of Highways and the Watershed Protection and Restoration Office have developed a Stormwater Pollution Prevention Plan, also known as the *Harford County* Jarrettsville *Highway Maintenance Facility Storm Water Pollution Prevention Plan.* This *Plan* was developed in accordance with the *General Permit for Discharges From Stormwater Associated With Industrial Activities (Discharge Permit No. 20-SW; NPDES Permit No. MDR0000)* as established by Maryland Department of the Environment, effective February 1, 2023. The *Plan* also satisfies those requirements established by the Maryland Department of the Environment's National Pollutant Discharge Elimination System (NPDES) MS4 permit.

The Division of Highways and The Watershed Protection and Restoration Office shall review the *Harford County Jarrettsville Highway Maintenance Facility Storm Water Pollution Prevention Plan* at a minimum of every three (3) years. Should any of the following conditions listed below occur, the personnel shall revise and reissue the *Plan* to the appropriate individuals and the Maryland Department of the Environment (MDE):

- Applicable laws are revised;
- The *Plan* fails in an emergency; or
- The facility changes in design or operation which results in an increased potential for fires, explosions, or release of hazardous waste.

All revisions to the *Harford County Jarrettsville Highway Maintenance Facility Storm Water Pollution Prevention Plan* shall be documented by providing the date and noting the section(s) which have been revised since its initial development.

Contents

SECTION 1: FACILITY DESCRIPTION AND CONTACT INFORMATION....4
1.1 FACILITY INFORMATION....4
1.2 CONTACT INFORMATION/RESPONSIBLE PARTIES....5
1.3 STORMWATER POLLUTION PREVENTION TEAM....6
1.4 ACTIVITIES AT THE FACILITY....6
1.5 GENERAL LOCATION MAP....7
1.6 SITE MAP....8
SECTION 2: POTENTIAL POLLUTANT SOURCES....8
2.1 INDUSTRIAL ACTIVITY AND ASSOCIATED POLLUTANTS....9
2.2 SPILLS AND LEAKS....9
2.3 NON-STORMWATER DISCHARGES DOCUMENTATION....9
2.4 SALT STORAGE....10
2.5 VISUAL MONITORING SUMMARY....10
2.6 PFAS AND PCB SOURCE IDENTIFICATION....10
SECTION 3: STORMWATER CONTROL MEASURES....10
3.1 MINIMIZE EXPOSURE....10
3.2 GOOD HOUSEKEEPING....11
3.3 MAINTENANCE....12
3.4 SPILL PREVENTION AND RESPONSE....13
3.5 EROSION AND SEDIMENT CONTROLS....14
3.6 MANAGEMENT OF RUNOFF....14
3.7 SALT STORAGE PILES OR PILES CONTAINING SALT....14
3.8 20-SW SECTOR-SPECIFIC NON-NUMERIC EFFLUENT LIMITS....15
3.9 EMPLOYEE TRAINING....16
3.10 NON-STORMWATER DISCHARGES....17
3.11 WASTE, GARBAGE AND FLOATABLE DEBRIS....17
3.12 DUST GENERATION AND VEHICLE TRACKING OF INDUSTRIAL MATERIALS....17
SECTION 4: SCHEDULES AND PROCEDURES FOR MONITORING....18

SECTION 5: INSPECTIONS.....19
SECTION 6: SWPPP CERTIFICATION.....20
SECTION 7: SWPPP MODIFICATIONS.....21
SWPPP ATTACHMENTS.....23

SECTION 1: FACILITY DESCRIPTION AND CONTACT INFORMATION

1.1 Facility Information

Name of Facility: Harford County Jarrettsville Highway Maintenance Facility
Street: 1348 Cooptown Road
City: Forest Hill State: MD ZIP Code: 21050
County: Harford
Permit Registration Number: 20SW2474 (Previous 12SW2474)

Latitude/Longitude (Use decimal format)
Latitude: Longitude:
39.592456 º N (decimal) -76.431957º W (decimal)

Estimated area of industrial activity at site exposed to stormwater: 11.8 acres

Primary SIC Code or 2-letter Activity Code: 1611
(refer to Appendix A of the 20-SW)
Identify your applicable sector and subsector: Sector AD.a: Dept. of Public Works and Highway Maintenance Facilities

Name and 8-digit identifier of the receiving water body: North Stirrup Run; 02120202

Are any of your discharges directly into any segment of an "impaired" water? ☐ Yes ☒ No

If Yes, identify name of the impaired water (and segment, if applicable):

Identify the pollutant(s) causing the impairment

For pollutants identified, which do you have reason to believe will be present in your discharge?

N/A

For pollutants identified, which have a completed TMDL? N/A

Do you discharge into a high quality receiving water designated as a Tier 2 water? ☒ Yes ☐ No

Do you discharge into a high quality receiving water designated as Use III or Use IV ☒ Yes ☐ No

1.2 Contact Information/Responsible Parties

Facility Operator:
Name: Bill Williams
Address: 1348 Cooptown Rd.
City, State, Zip Code: Forest Hill, MD 21050
Telephone Number: (410) 692-7878 X7686
Email address: wpwilliams@harfordcountymd.gov
Fax number: (410) 692-7853

Facility Owner:
Name: Harford County Government
Address: 220 S Main St.
City, State, Zip Code: Bel Air, MD 21014
Telephone Number: (410) 879-2000
Email address: CountyExecutive@harfordcountymd.gov
Fax number: (410) 638-1387

SWPPP Contact:
Name: Richard Wise
Telephone number: (410) 638-3217 X2446
Email address: rhwise@harfordcountymd.gov
Fax number: (410) 879-8439

1.3 Stormwater Pollution Prevention Team

	NAME	TITLE	PHONE NUMBER	RESPONSIBILITIES
NPDES Program Manager	Danielle Hankins	Administrator	410-638-3217 X1176	Overseeing NPDES Program
Leader	Bill Williams	Supervisor	410-692-7878 x7686	Overseeing activities occurring at the Jarrettsville Highway Maintenance Facility Implementing BMPs Evaluating BMPs to measure effectiveness of plan Training
Member	Oscar Preston	Crew Chief	410-692-7878 x7688	Office Facility
Member	Eric Classon	Crew Chief	410-692-7878 x7687	Shop Facility
Member	Crist Burns	Yard Man	410-692-7878 x7689	Yard and Stockpile Area
Member	Richard Wise	Watershed Restoration Specialist	410-638-3217 X2446	Site assessments Identification of pollutant sources and risks SWPPP Preparation

1.4 Activities at the Facility

The Jarrettsville Highway Maintenance Facility is located at 1348 Cooptown Road, Forest Hill, Maryland 21050. The Jarrettsville Highway Maintenance Facility serves as a fueling site and storage for materials such as salt, sand and aggregate essential in ensuring the safety of motorists traveling Harford County roadways.

1.5 General Location Map

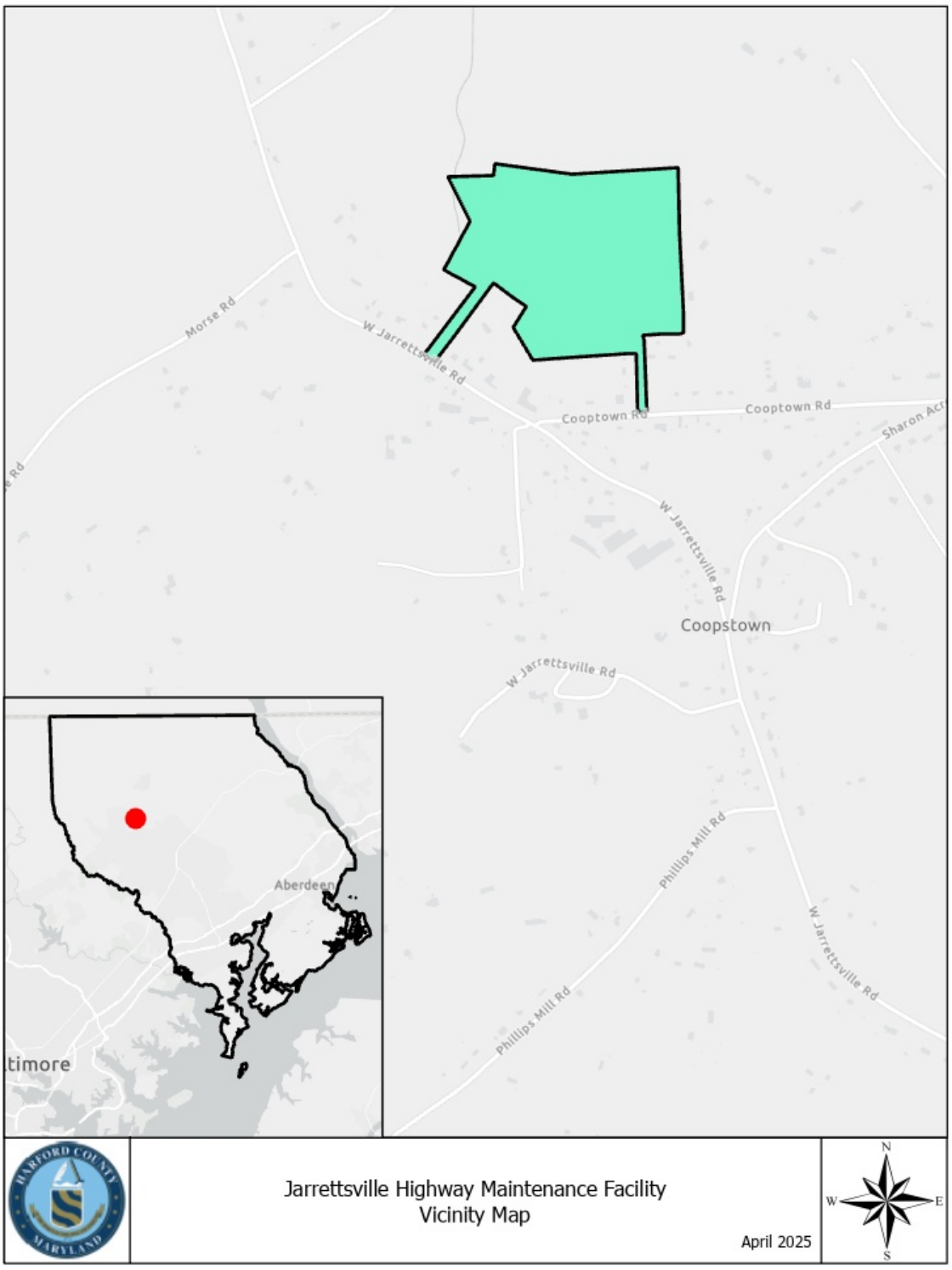

1.6 Site Map

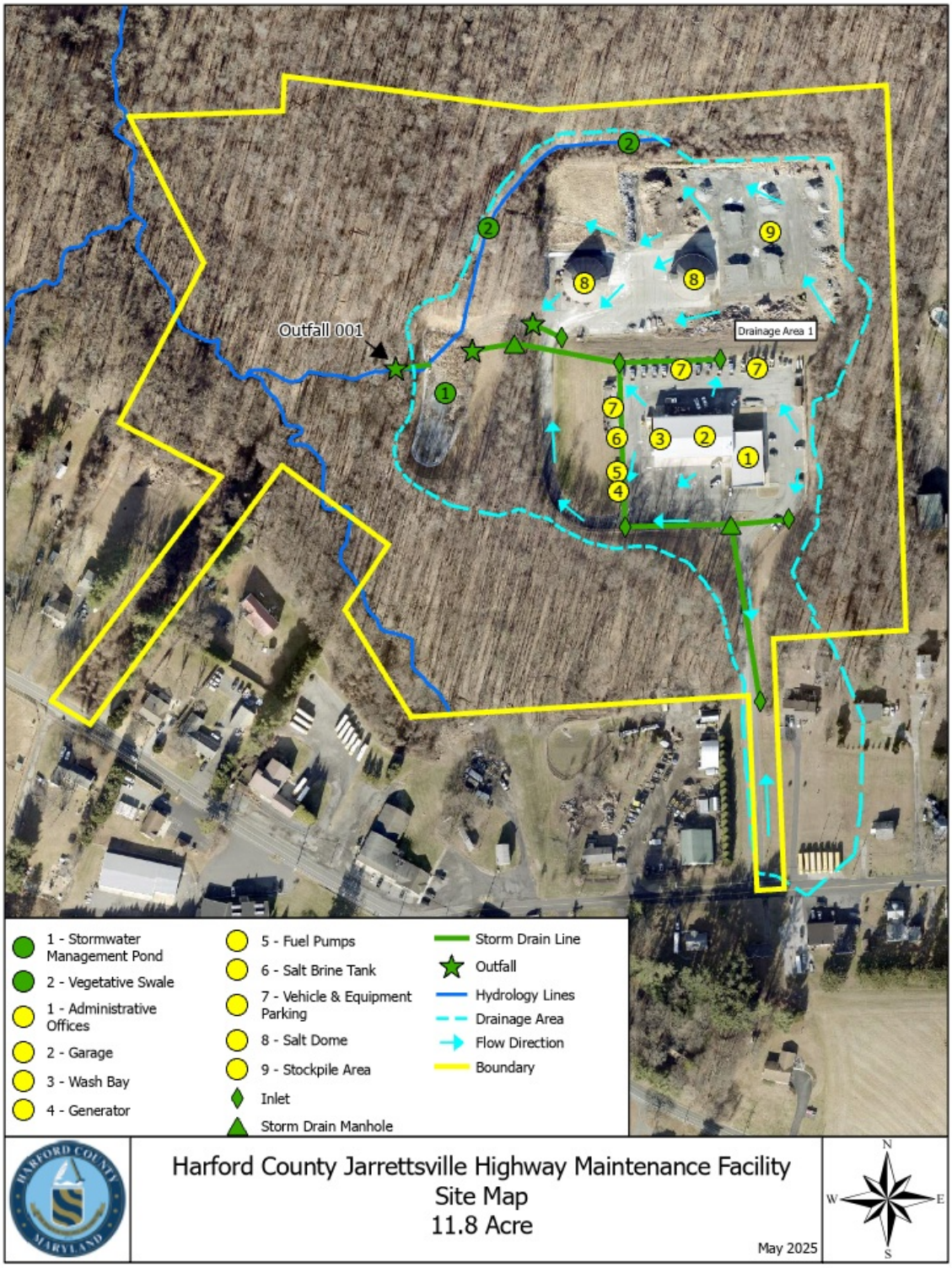
Outfall 001
Drainage Area 1
1 - Stormwater Management Pond
2 - Vegetative Swale
1 - Administrative Offices
2 - Garage
3 - Wash Bay
4 - Generator
5 - Fuel Pumps
6 - Salt Brine Tank
7 - Vehicle & Equipment Parking
8 - Salt Dome
9 - Stockpile Area
Inlet
Storm Drain Manhole
Storm Drain Line
Outfall
Hydrology Lines
Drainage Area
Flow Direction
Boundary
Harford County Jarrettsville Highway Maintenance Facility
Site Map
11.8 Acre
May 2025
N
W
E
S

SECTION 2: POTENTIAL POLLUTANT SOURCES

2.1 Industrial Activity and Associated Pollutants

Industrial Activity	Associated Pollutants
Material storage - Indoors	Oil, antifreeze, liquid asphalt, blacktop cold patch, car/truck wash soap. Cement, cleaners, oil/gas mix, Diesel Fuel Fluid
Material storage – Outdoors	Blacktop, crushed aggregate, stone aggregate, millings, spoil piles, tar pot, topsoil
Fueling Station	Unleaded fuel, Diesel Fuel
Salt Dome / Salt Brine Tank	Salt
Spills and Leaks	Generator (diesel fuel)

2.2 Spills and Leaks

Areas of Site Where Potential Spills/Leaks Could Occur

Location	Outfalls
Fueling Station	Overland flow
Salt Brine Tank	Overland flow
Salt Dome	Overland flow
Aggregate, topsoil, millings outdoor storage	Overland flow
Parking lots	Overland flow
Generator	Overland flow

Description of Past Spills/Leaks

Date	Description	Outfalls
	none	

2.3 Non-Stormwater Discharges Documentation

Date	Method	Discharge noted	Corrective Action
	Visual Inspection	None	

2.4 Salt Storage

Two salt storage domes, with a total holding capacity of 6,000 tons, are located onsite on asphalt pads that drain to the stormwater management facility. A 5,500-gallon salt brine tank is also located onsite.

2.5 Visual Monitoring Summary

Monthly visual inspections were performed during the last permit period.

2.6 PFAS and PCB Source Identification

There are no known sources of PFAS or PCB at the Jarrettsville Highway Maintenance Facility.

SECTION 3: STORMWATER CONTROL MEASURES

3.1 Minimize Exposure

Indoor Storage Areas

Storage of materials used for various operations such as equipment maintenance and road painting in containers and/or in environments that are not susceptible to storm water exposure.

Highway Maintenance Building

Material	Purpose and/or Location	Quantity Stored (Maximum)	Likelihood of contact with storm water.
Antifreeze	Used for equipment. Material is stored in drums on spill decks.	50 Gallons	None. Antifreeze is used for equipment and is stored in drums on spill decks to prevent any exposure to storm water.
Asphalt, Liquid	Used for road repairs. Material is stored indoors in storage tank.	1,000 Gallons	None. Material is stored indoors in storage tank which does not make it susceptible to stormwater.
Blacktop Cold Patch	Bags stored indoors on pallets.	6,000 pounds	None. Bags are stored indoors on pallets.
Car/Truck Wash Soap	Soap is stored in a tank indoors.	200 Gallons	None. Soap is stored indoors in a tank.
Cement, Masonry	Bags are stored inside of a Black Bear Shed	7,000 pounds	None. Material is stored inside of a Black Bear Shed.
Cement, Portland	Bags are stored inside of a Black Bear Shed	4,700 pounds	None. Material is stored inside of a Black Bear Shed.
Cleaners	Items are properly labeled and stored	10 Gallons	None. Items are properly labeled and stored on shelves in the storeroom.

	on shelves in the storeroom.		
Gas and Oil Mix	Stored in inflammable safety cabinet.	6 Gallons	None. Mixture is stored indoors in an inflammable safety cabinet which prevents it from entering storm water.
Oil, Motor	Used for equipment. Material is stored in drums on spill decks.	100 Gallons	None. Motor oil is used for equipment and is stored in drums on spill decks therefore negating any exposure to storm water.
Paint	Used for maintenance purposes. Paints are stored inside an inflammable safety cabinet.	50 Gallons	None. Paint is applied in dry conditions, dries in minutes, and is therefore not exposed to storm water.

3.2 Good Housekeeping

The Jarrettsville Highway Maintenance Facility has implemented the following good housekeeping measures listed below:

Operation and Maintenance

- Maintain dry and clean floors and ground surfaces by using brooms, shovels, vacuum cleaners, or cleaning machines.
- Regularly pick up and dispose of garbage and waste material.
- Make sure equipment is working properly.
- Routinely inspect for leaks or conditions that could lead to discharges of chemicals or contact of storm water with raw materials, intermediate materials, waste materials, or products.
- Make sure outside areas are kept in a neat and orderly condition.
- Implement weekly housekeeping inspections.
- Ensure that spill cleanup procedures are understood by employees.

Material Storage Practices

- Provide adequate aisle space to facilitate material transfer and easy access for inspections.
- Store containers, drums, and bags away from direct traffic routes to prevent accidental spills.
- Stack containers according to manufacturers' instructions to avoid damaging the containers from improper weight distribution.
- Store containers on pallets or similar devices to prevent corrosion of the containers due to contact with moisture on the ground.
- Assign the responsibility of hazardous material inventory to a limited number of people who are trained to handle hazardous materials.

Material Inventory Procedures

- Identify all chemical substances present in the workplace.

- Label all containers to show the name and type of substance, stock number, expiration date, health hazards, suggestions for handling, and first aid information.
- Clearly mark on the inventory hazardous materials that require special handling, storage, use, and disposal considerations.
- Ensure storage areas are designed to contain spills.
- Implement a shelf-life program which can reduce waste that results from overstocking and allows for the disposal of outdated materials.

Employee Participation

- Incorporate information sessions on good housekeeping practices into the facility's employee training program.
- Discuss good housekeeping at employee meetings.
- Post bulletin boards with updated good housekeeping procedures, tips, and reminders.

3.3 Maintenance

The Jarrettsville Highway Maintenance Facility implemented the following Preventative Maintenance measures and conducts inspections as noted below.

Storm Water Management Pond

- Maintenance of the stormwater pond shall consist of biannual visual inspections of all components of the stormwater management pond performed by Harford County stormwater management personnel in March and September.
- Grass on the dam and non-wetland portions shall be mowed any time the grass is over six inches tall.
- Maintenance of vegetative cover shall consist of mowing, liming and fertilizing.
- At a minimum, lime and fertilizer shall be applied once every two years.
- There shall be no planting of trees or woody vegetation on the embankment.
- Rills on the slopes of the dam shall be filled and thoroughly compacted with suitable materials. These areas shall be reseeded or resodded, limed and fertilized as needed.
- Fences, gates and all appurtenances shall be kept in good repair and free of trash.

Deterioration of pipe, riser or embankment shall be reported to the Harford County Department of Public Works at (410) 638-3545 as soon as discovered and prior to repair. Harford County or Harford County's representative shall perform all required maintenance, at Harford County's expense.

Vegetative Areas

- Personnel shall conduct inspections of the permanent vegetative stabilization area around the perimeter of the facility to determine if repairs, replacements and reseedings are necessary.

Employee Participation

- Schedule monthly Maintenance Inspections.
- Implement a schedule to adjust, repair, or replace equipment or systems in a regular or timely manner.
- Promptly repair defective equipment found during inspections and testing.
- Inspect and test facility equipment and systems to uncover conditions that could cause breakdowns or failures resulting in discharges of pollutants to surface waters.
- Maintain records on Preventive Maintenance inspections.

3.4 Spill Prevention and Response

Upon inspection of the Jarrettsville Highway Maintenance Facility, the areas identified most susceptible to a spill were the fuel pad and storage areas. Pigs and pads are available at the pumps and storage areas to absorb and dispose of any spilled materials properly.

Preventive measures implemented by Harford County to improve material handling procedures and storage include the following:

- Adopting effective housekeeping practices.
- Performing regular visual inspections to identify signs of wear on storage containers, equipment, etc.
- Performing preventive maintenance on equipment, tanks, etc.
- Using filling procedures for tanks and other equipment to minimize spills.
- Using material transfer procedures that reduce the chance of leaks or spills.
- Substituting less or non-toxic materials for toxic materials.
- Ensuring appropriate security.
- Developing ways to recycle, clean, and/or reuse process materials to reduce the volume brought into the facility.
- Installing leak detection devices, overflow controls, and diversion berms.

In the event of a spill, staff will follow the procedures listed below:

1. Identify the material, the source, and approximate quantity.
2. Attend to any individuals who are injured and contact 911 for further assistance if necessary.
3. Evaluate the potential for fires, explosions, etc.
4. If possible, stop the release to prevent the situation from worsening.
5. Contain the spill using pads, berms, ditches, etc.
6. Evaluate if the situation is an immediate threat to the life or health of fellow employees.
7. If the material has a Reportable Quantity (RQ) Requirement and the spill was in excess of the RQ amount, contact Emergency Response Agencies.
8. Prevent other humans or vehicles from exposure to the spill by sectioning off the area, posting a sign, or having someone guard the area.

9. Organize those individuals responsible for spill cleanup, review the situation with them, any hazards they may encounter, and ensure they are using proper equipment, protective clothing, following proper clean up, decontamination, and disposal procedures.
10. Dispose of contaminated absorbents and other supplies properly and decontaminate any equipment used in the clean-up process and dispose of contaminated absorbents and other supplies properly.

Harford County shall, after any spill, evaluate the Response Plan and make any necessary improvements to the Plan.

3.5 Erosion and Sediment Controls

Harford County maintains vegetative buffers, vegetative swales and a storm water management pond to limit erosion at the Jarrettsville Highway Maintenance Facility. Harford County's Department of Public Works Storm Water Management staff conducts annual inspections to ensure proper maintenance of controls.

3.6 Management of Runoff

The following best management practices are installed at the Jarrettsville Highway Maintenance Facility:

Storm Water Management Pond

This is an extended detention facility. It manages the 2-year and 10-year storms, as required.

Vegetative Areas

Vegetated swales receive runoff from the salt dome and the outdoor storage area of asphalt millings, aggregate and topsoil.

These facilities are inspected triennially as required by the County and MDE. Inspection reports are available from the County.

3.7 Salt Storage Piles or Piles Containing Salt

Jarrettsville Highway Maintenance Facility has two enclosed salt storage domes and one salt brine tank. The domes house approximately 6,000 tons of salt that is used for deicing operations. The salt brine tank has a capacity of 5,500 gallons for highway deicing pre-treatment operations. Good Housekeeping practices (berms, sweeping, equipment maintenance) are employed to minimize exposure of salt to stormwater. Runoff from the paved area is treated with vegetated swales and the stormwater management facility.

3.8 20-SW Sector-Specific Non-Numeric Effluent Limits

Within Sector AD.a. Department of Public Works and Highway Maintenance Facilities, the Specific Non-Numeric Effluent Limits are described in Sector P Transportation and Warehousing.

P.3 Additional Technology-Based Effluent Limits.

P.3.1 Good Housekeeping Measures

P.3.1.1 Vehicle and Equipment Storage Areas

P.3.1.2 Fueling Areas

The fueling area is covered to minimize exposure to stormwater. Spills are handled as described in Item 3.4 above.

P.3.1.3 Material Storage Areas

The material storage areas are handled as described in Item 3.2 above.

P.3.1.4 Vehicle and Equipment Cleaning Areas

P.3.1.5 Vehicle and Equipment Maintenance Areas

P.3.1.6 Locomotive Sanding

Not applicable.

P.4 Additional SWPPP Requirements

P.4.1 Drainage Area Site Map

The site map is provided in Section 1.6 above.

P.4.2 Potential Pollutant Sources

Potential Pollutant Sources are described in Items 2.1 and 2.2 above.

P.4.3 Description of Good Housekeeping Measures

Good Housekeeping Measures are described in Section 3.2 above.

P.5 Additional Inspection Requirements

Inspection procedures are described in Sections 3.2 and 3.3 above.

3.9 Employee Training

Jarrettsville Highway Maintenance Facility conducts the employee training programs described below and makes modifications as necessary to ensure all employees are properly educated of all measures contained in the pollution prevention plan. Employee training records shall be kept on file at the Jarrettsville Highway Maintenance Facility.

TRAINING TOPICS	BRIEF DESCRIPTION OF TRAINING PROGRAM / MATERIALS	SCHEDULE FOR TRAINING (LIST DATES)	ATTENDEES
SPILL PREVENTION AND RESPONSE Identifying potential spill areas and drainage routes; Procedures for reporting spills; Appropriate material handling procedures and storage requirements; Implementing spill response procedures.	Videos and Posted Notices	Routine training to be conducted by Jarrettsville Highway Maintenance Facility staff	All shop employees
GOOD HOUSEKEEPING Regular vacuuming and/or sweeping; Prompt cleanup of spilled materials to prevent pollution runoff; Identify where brooms, vacuums, sorbents, foams, neutralizing agents, and other good housekeeping and spill response equipment are located; Instruction on securing drums and containers and frequently checking for leaks and spills; Outline a regular schedule for housekeeping activities.	Safety Training Meetings	Annually	All shop employees
MATERIAL MANAGEMENT PRACTICES Organize materials for storage; Identify all toxic and hazardous substances stored and handled on-site; Discuss handling procedures for all toxic and hazardous materials.	Briefings	Annually	All shop employees

3.10 Non-Stormwater Discharges

Non-stormwater discharges are addressed as described in Section 2.3 above.

3.11 Waste, Garbage and Floatable Debris

Waste, Garbage and Floatable Debris are addressed in Section 3.2 above.

3.12 Dust Generation and Vehicle Tracking of Industrial Materials

Good housekeeping measures on paved surfaces are employed to minimize dust generation.

SECTION 4: SCHEDULES AND PROCEDURES FOR MONITORING

Jarrettsville Highway Maintenance Facility does not have Benchmark Monitoring Requirements as described for Sector AD.a *Department of Public Works and Highway Maintenance Facilities***.** Stormwater from the Jarrettsville Highway Maintenance Facility discharges to North Stirrup Run, a tributary to Deer Creek, a Tier 2 waterway. There are no impairments to the receiving water.

Location	Frequency	Method	Responsible Person
Outfall 001	**Quarterly**	**Visual evaluation**	**Supervisor**

Once per quarter, a stormwater sample must be collected from each outfall in such a manner that they are representative of the stormwater discharge from that outfall. A quality storm event is any storm where there is measurable discharge. The sample(s) shall be collected in a colorless glass or plastic container and visually examined for the parameters listed on the Quarterly Visual Monitoring Form (Attachment D). The Quarterly Visual Monitoring Form shall be signed and dated by the person conducting the visual examination. A copy of the Quarterly Visual Monitoring Form shall be kept with the facility's SWPPP and be available when requested.

Outfall 001, as indicated on the facility's site map, has been designated as the sole monitoring location. This is due to the facility's interior outfalls and vegetative swale discharge into the stormwater management pond. Outfall 001 is the discharge point from the stormwater management pond which receives runoff from the drainage area surrounding the facility's industrial activities areas.

Should there be any indication of a pollutant, an inspection will be performed to determine the source of the pollutant and corrective actions will be taken to remove the source.

SECTION 5: INSPECTIONS

In addition to the quarterly visual monitoring of stormwater discharge, routine site inspections will be performed as described in Sections 3.2 and 3.3 above on a quarterly basis as required by the county's 20-SW permit. Annually, a comprehensive site evaluation (Attachment E) will be performed by qualified personnel. This inspection will include the following elements:

- Inspect storm water drainage areas for evidence of pollutants entering the drainage system.
- Evaluate the effectiveness of measures to reduce pollutant loadings and whether additional measures are needed.
- Observe structural measures, sediment controls, and other storm water BMPs to ensure proper operation.
- Inspect any equipment needed to implement the plan, such as spill response equipment.
- Revise the plan as needed within two weeks of inspection (potential pollutant source description and description of measures and controls).
- Implement any necessary changes in a timely manner, but at least within 12 weeks of the inspection.
- Prepare a report summarizing inspection results and follow up actions, the date of inspection and personnel who conducted the inspection; identify any incidents of non-compliance or certify that the facility is in compliance with the plan.
- Document all incidents of noncompliance in the inspection report. Where there are no incidents of noncompliance, the inspection report must contain a certification that the facility is in compliance with the plan.
- Sign the report and submit it with the plan.

SECTION 6: SWPPP CERTIFICATION

I certify under penalty of law that this document and all attachments were prepared under my direction or supervision in accordance with a system designed to assure that qualified personnel properly gathered and evaluated the information submitted. Based on my inquiry of the person or persons who manage the system, or those persons directly responsible for gathering the information, the information submitted is, to the best of my knowledge and belief, true, accurate, and complete. I am aware that there are significant penalties for submitting false information, including the possibility of fine and imprisonment for knowing violations.

Name: Danielle Hankins Title: Administrator

Signature: Danielle M Hankins I am approving this document 2025.05.27 15:25:11-04'00' Date: 05.27.2025

SECTION 7: SWPPP MODIFICATIONS

Original Completion Date: June 2023

Revision Date: April 2024

Revisions:

- Section 1.1 Facility Information – Updated 20SW Permit Number
- Section 1.3 Stormwater Pollution Prevention Team
- Section 1.6 Site Map – Added location of new salt brine tank
- Section 2.1 Industrial Activity and Associated Pollutants
  - *Addition of the salt brine tank
- Section 2.4 Salt Storage
  - *Addition of the salt brine tank
- Section 3.7 Salt Storage Piles or Piles Containing Salt
  - *Addition of the salt brine tank
- Attachment B – Update of the site map showing the location of the new salt brine tank

Revision Date: May 2025

Revisions:

- Overall reformatting and grammar corrections
- Section 1.1 Facility Information
  - Added name of the receiving water body
- Section 1.2 Contact Information/Responsible Parties
  - Updated SWPPP Contact
- Section 1.3 Stormwater Pollution Prevention Team
  - Updated Administrator
  - Updated Watershed Restoration Specialist
- Section 1.5 General Location Map
  - Revised map with correct County Seal
- Section 1.6 Site Map
  - Updated county seal
  - Revised drainage area
  - Labelled drainage area
  - Renamed Outfall 004 to Outfall 001
  - Removed location of original Outfall 001
  - Added generator
  - Added vehicle and equipment parking
  - Corrected locations of inlets

    - Added stormwater drain line
    - Added stormwater drain manholes
- Section 2.1 Industrial Activity and Associated Pollutants
    - Added accidental spills and leaks associated with the diesel-powered generator
- Section 2.2 Spills and Leaks – Areas of Site Where Potential Spills/Leaks Could Occur
    - Revised affected outfalls
    - Added generator
- 3.1 Minimize Exposure – Indoor Storage Areas – Highway Maintenance Building
    - Removed column for quantity used
    - Removed column for quantity produced
    - Removed column for quantity exposed in the last three years
    - Removed column for past significant spill or leak
    - Updated quantity stored as the maximum quantity to be stored at any given time
    - Removed Oil-dri
- 3.6 Management of Runoff
    - Removed Outfall A as source of runoff for vegetative areas
- Section 4 Schedules and Procedures for Monitoring
    - Renamed original Outfall 004 to Outfall 001
    - Revised language regarding the collection of the quarterly visual monitoring samples
    - Added language regarding the collection of one visual monitoring sample from Outfall 001 due to the interior outfalls and vegetative swale discharging into the stormwater management pond. Outfall 001 is the discharge point from the stormwater management pond, which receives runoff from the drainage area surrounding the facility's industrial activities areas.
- SWPPP Attachments
    - Updated Attachment A – General Location Map included as an 11"x17" map
    - Updated Attachment B – Site Map included as an 11"x17" map
    - Included Attachment D – Quarterly Visual Monitoring Form
    - Included Attachment E – EPA Annual Reporting Form

SWPPP ATTACHMENTS

Attachment A – General Location Map

Attachment B – Site Map

Attachment C – General Permit 20-SW

Attachment D – Quarterly Visual Monitoring Form

Attachment E – EPA Annual Reporting Form

Attachment A – General Location Map



Jarrettsville Highway Maintenance Facility
Vicinity Map

April 2025

Attachment B – Site Map

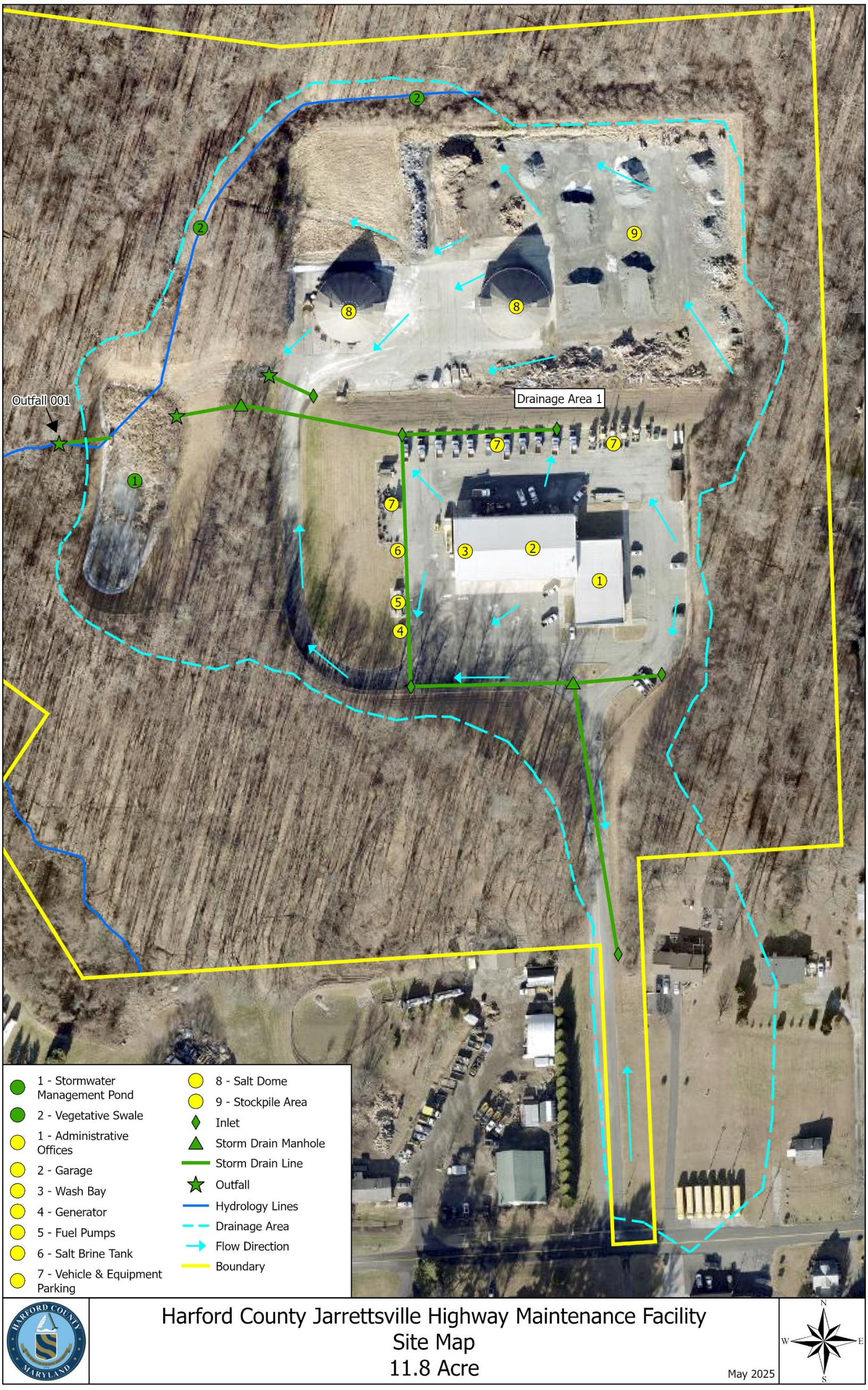

Attachment C – General Permit 20-SW

Attachment D – Quarterly Visual Monitoring Form

Quarterly Visual Monitoring Form

Fill out a separate form for each outfall sampled.

Sample Location					
Quarter / Year:		**Date / Time Collected:**		**Date / Time Examined:**	
Qualifying Storm Event?	Yes No	**Runoff Source:**	Rainfall Snowmelt		
Collector's Name & Title					
Examiner's Name & Title					

Parameter	Parameter Description	Parameter Characteristics
1. Color	Does the stormwater appear to have any color? **Yes** **No (Clear)**	If Yes, describe: *Yellow* *Brown* *Red* *Gray* *Other*:
2. Clarity	Is the stormwater not clear? **Yes** **No**	If not clear, which of the following best describes the clarity of the stormwater? *Suspended Solids* *Milky/Cloudy* *Opaque* *Other :*
3. Oil Sheen	Can you see a rainbow effect or sheen on the water surface? **Yes** **No**	Which best describes the sheen? *Rainbow sheet* *Floating oil globules* *Other :*
4. Odor	Does the sample have an odor? **Yes** **No**	If Yes, describe: *Chemical* *Musty* *Rotten Eggs* *Sewage* *Sour Milk* *Oil/Petroleum* *Other :*
5. Floating Solids	Is there anything on the surface of the sample? **Yes** **No**	If Yes, describe: *Suds* *Oily Film* *Garbage* *Sewage* *Water Fowl Excrement* *Other :*
6. Suspended Solids	Is there anything suspended in the sample? **Yes** **No**	Describe:
******Leave sample undisturbed for 30 minutes.******		
7. Settled Solids	Is there anything settled on the bottom of the sample? **Yes** **No**	Describe: (*note type, size and material after sample is not disturbed for 30 minutes)*
8. Foam	Does foam or material form on the top of the sample surface if you shake it? **Yes** **No**	Describe:

9. If there are any visible indicators of pollution identify (1) where the pollution may come from and (2) any corrective actions taken.

Stormwater Collector's Signature and Date:

Stormwater Examiner's Signature and Date:

Note – Sample should be collected and analyzed in a colorless glass or plastic bottle.

Instructions for Completing the Visual Monitoring Form

Per PART V. INSPECTIONS, MONITORING, AND REPORTING, you must collect a stormwater sample from each outfall once each quarter for the entire permit term and conduct a visual assessment of each sample. You must follow the monitoring procedures outlined in Part V.C. These samples should be collected in such a manner that they are representative of the stormwater discharge from that outfall. Each assessment must be kept onsite with your SWPPP and available for inspection and review by the Department at anytime.

First, fill out all information on the top of the visual monitoring form. A qualifying storm event is any storm where there is a measurable discharge. Then, take a grab sample in a clear container. Evaluate the sample in a well-lit area for the following parameters:

1. **Color:** Record the best description of the sample color in the appropriate space on the form.
2. **Clarity**: This parameter refers to how cloudy the sample is. It is *usually* an indication of fewer pollutants in the water if the sample is clear or transparent. If the clarity has changed since the last sample, try to identify what might have caused this to happen.
   - **Clear** – Sample doesn't block any light; can be seen through regardless of color.
   - **Cloudy** – Sample blocks some light; objects not clear but can be identified looking through the sample.
   - **Very Cloudy** – Sample blocks most light; objects cannot be identified looking through the sample.
   - **Opaque** – Sample blocks all light; objects cannot be seen when looking through the sample.
3. **Oil Sheen:** Record whether or not an oil sheen is present. If a film of iridescent color is noted on the surface of the sample or a rainbow effect appears to be floating on the surface of the water, this usually indicates oil is present.
4. **Odor:** If sample has no odor other than natural rainwater or snowmelt, write "NO" on the visual monitoring form. Note the presence of any of the following odors if detected, such as gasoline, diesel, oil, solvents (WD-40, other petroleum products, etc.), garbage, fishy, sweet/sugary, any other unusual odors not normally present in clean runoff from the area sampled.
5. **Floating Solids:** A contaminated flow may contain solids or liquids floating on the surface. Identifying floatables can aid in finding the source of the contamination. Examples of floatables are spoiled food products, oils, plant parts, solvents, sawdust, foams and fuel. Give a general description of the type of floating solids present (wood chips, leaf debris, algae, etc) in the general comments section for each sample. Identify amount of floating solids as described below.
   - **High** – More than 20% of the surface of the sample is covered with floating solids.
   - **Moderate** – Less than 20% of the surface of the sample is covered with floating solids.
   - **Slight** – Only a few floating particles observed on the surface of the sample.
   - **None** – No floating solids present on the surface of the sample.
6. **Suspended solids:** Record whether or not suspended solids are present in the sample. Suspended solids are particles floating inside the column of water, not on top, and may contribute to changes in water color or clarity. Cracked or deteriorated concrete or peeling surface paint at an outfall usually indicates the presence of severely contaminated discharges. Contaminants causing this type of damage are usually very acidic or basic.

---------- WAIT 30 MINUTES ----------

Leave the sample undisturbed for 30 minutes to allow the water and anything in it to settle.

7. **Settled Solids:** After 30 minutes has passed, give a general description of the type of settled solids present (sand, decayed plant matter, rust particles, etc.) in the general comments section.
8. **Foam:** After completing #7, shake the bottle gently. Record foam results on the form as they most closely match one of the descriptions listed below.
   - **None** – Most bubbles break down within ten (10) seconds of shaking; only a few large bubbles persist longer than ten (10) seconds.
   - **Moderate** – Many small bubbles are present but these bubbles persist for less than two (minutes) after shaking.
   - **High** – Many small bubbles are present and they persist longer than two (2) minutes after shaking.
9. Detail any concerns, corrective actions taken and any other indicators of pollution present in the sample. This should include the identified source if there are visible indicators present in the sample. The person performing test must sign and date each form**.**

Attachment E – EPA Annual Reporting Form

NPDES Permit Tracking No.:

UNITED STATES ENVIRONMENTAL PROTECTION AGENCY
WASHINGTON, DC 20460

Annual Reporting Form

A. GENERAL INFORMATION

1. Facility Name:

2. NPDES Permit Tracking No.:

3. Facility Physical Address:

a. Street:

b. City: c. State: d. Zip Code: -

4. Lead Inspectors Name: Title:

Additional Inspectors Name(s):

5. Contact Person: Title:

Phone: - - Ext. E-mail:

6. Inspection Date : / /

B. GENERAL INSPECTION FINDINGS

1. As part of this comprehensive site inspection, did you inspect all potential pollutant sources, including areas where industrial activity may be exposed to stormwater?
☐ YES ☐ NO

If NO, describe why not:

NOTE: *Complete Section C of this form for each industrial activity area inspected and included in your SWPPP or as newly identified in B.2 or B.3 below where pollutants may be exposed to stormwater.*

2. Did this inspection identify any stormwater or non-stormwater outfalls not previously identified in your SWPPP? ☐ YES ☐ NO

If YES, for each location, describe the sources of those stormwater and non-stormwater discharges and any associated control measures in place:

NPDES Permit Tracking No.:

3. Did this inspection identify any sources of stormwater or non-stormwater discharges not previously identified in your SWPPP? ☐ YES ☐ NO

If YES, describe these sources of stormwater or non-stormwater pollutants expected to be present in these discharges, and any control measures in place:

4. Did you review stormwater monitoring data as part of this inspection to identify potential pollutant hot spots? ☐ YES ☐ NO ☐ NA, no monitoring performed

If YES, summarize the findings of that review and describe any additional inspection activities resulting from this review:

5. Describe any evidence of pollutants entering the drainage system or discharging to surface waters, and the condition of and around outfalls, including flow dissipation measures to prevent scouring:

6. Have you taken or do you plan to take any corrective actions, as specified in Part 3 of the permit, since your last annual report submission (or since you received authorization to discharge under this permit if this is your first annual report), including any corrective actions identified as a result of this annual comprehensive site inspection?

☐ YES ☐ NO

If YES, how many conditions requiring review for correction action as specified in Parts 3.1 and 3.2 were addressed by these corrective actions? ☐☐

NOTE: *Complete the attached Corrective Action Form (Section D) for each condition identified, including any conditions identified as a result of this comprehensive stormwater inspection.*

NPDES Permit Tracking No.:

C. INDUSTRIAL ACTIVITY AREA SPECIFIC FINDINGS

Complete one block for each industrial activity area where pollutants may be exposed to stormwater. Copy this page for additional industrial activity areas.

In reviewing each area, you should consider:

- Industrial materials, residue, or trash that may have or could come into contact with stormwater;
- Leaks or spills from industrial equipment, drums, tanks, and other containers;
- Offsite tracking of industrial or waste materials from areas of no exposure to exposed areas; and
- Tracking or blowing of raw, final, or waste materials from areas of no exposure to exposed areas.

INDUSTRIAL ACTIVITY AREA _____:

1. Brief Description**:**

2. Are any control measures in need of maintenance or repair? ☐ YES ☐ NO

3. Have any control measures failed and require replacement? ☐ YES ☐ NO

4. Are any additional/revised control measures necessary in this area? ☐ YES ☐ NO

If YES to any of these three questions, provide a description of the problem: (Any necessary corrective actions should be described on the attached Corrective Action Form)

INDUSTRIAL ACTIVITY AREA _____:

1. Brief Description:

2. Are any control measures in need of maintenance or repair? ☐ YES ☐ NO

3. Have any control measures failed and require replacement? ☐ YES ☐ NO

4. Are any additional/revised c necessary in this area? ☐ YES ☐ NO

If YES to any of these three questions, provide a description of the problem: (Any necessary corrective actions should be described on the attached Corrective Action Form)

INDUSTRIAL ACTIVITY AREA _____:

Brief Description:

2. Are any control measures in need of maintenance or repair? ☐ YES ☐ NO

3. Have any control measures failed and require replacement? ☐ YES ☐ NO

4. Are any additional/revised BMPs necessary in this area? ☐ YES ☐ NO

If YES to any of these three questions, provide a description of the problem: (Any necessary corrective actions should be described on the attached Corrective Action Form)

NPDES Permit Tracking No.:

NOTE: *Copy this page and attach additional pages as necessary*

INDUSTRIAL ACTIVITY AREA _____:

1. Brief Description:

2. Are any control measures in need of maintenance or repair? ☐ YES ☐ NO

3. Have any control measures failed and require replacement? ☐ YES ☐ NO

4. Are any additional/revised BMPs necessary in this area? ☐ YES ☐ NO

If YES to any of these three questions, provide a description of the problem: (Any necessary corrective actions should be described on the attached Corrective Action Form)

INDUSTRIAL ACTIVITY AREA _____:

1. Brief Description:

2. Are any control measures in need of maintenance or repair? ☐ YES ☐ NO

3. Have any control measures failed and require replacement? ☐ YES ☐ NO

4. Are any additional/revised BMPs necessary in this area? ☐ YES ☐ NO

If YES to any of these three questions, provide a description of the problem: (Any necessary corrective actions should be described on the attached Corrective Action Form)

INDUSTRIAL ACTIVITY AREA _____:

1. Brief Description:

2. Are any control measures in need of maintenance or repair? ☐ YES ☐ NO

3. Have any control measures failed and require replacement? ☐ YES ☐ NO

4. Are any additional/revised BMPs necessary in this area? ☐ YES ☐ NO

If YES to any of these three questions, provide a description of the problem: (Any necessary corrective actions should be described on the attached Corrective Action Form)

NPDES Permit Tracking No.:

D. CORRECTIVE ACTIONS

Complete this page for each specific condition requiring a corrective action or a review determining that no corrective action is needed. Copy this page for additional corrective actions or reviews.

Include both corrective actions that have been initiated or completed since the last annual report, and future corrective actions needed to address problems identified in this comprehensive stormwater inspection. Include an update on any outstanding corrective actions that had not been completed at the time of your previous annual report.

1. Corrective Action # ____ of ____ for this reporting period.

2. Is this corrective action:

- ☐ An update on a corrective action from a previous annual report; or
- ☐ A new corrective action?

3. Identify the condition(s) triggering the need for this review:

- ☐ Unauthorized release or discharge
- ☐ Numeric effluent limitation exceedance
- ☐ Control measures inadequate to meet applicable water quality standards
- ☐ Control measures inadequate to meet non-numeric effluent limitations
- ☐ Control measures not properly operated or maintained
- ☐ Change in facility operations necessitated change in control measures
- ☐ Average benchmark value exceedance
- ☐ Other (describe): _____

4. Briefly describe the nature of the problem identified:

5. Date problem identified: __/__/____

6. How problem was identified:

- ☐ Comprehensive site inspection
- ☐ Quarterly visual assessment
- ☐ Routine facility inspectio
- ☐ Benchmark monitoring
- ☐ Notification by EPA or State or local authorities
- ☐ Other (describe): _____

7. Description of corrective action(s) taken or to be taken to eliminate or further investigate the problem (e.g., describe modifications or repairs to control measures, analyses to be conducted, etc.) or if no modifications are needed, basis for that determination:

8. Did/will this corrective action require modification of your SWPPP? ☐ YES ☐ NO

9. Date corrective action initiated: __/__/____

10. Date correction action completed: __/__/____ or expected to be completed: __/__/____

11. If corrective action not yet completed, provide the status of corrective action at the time of the comprehensive site inspection and describe any remaining steps (including timeframes associated with each step) necessary to complete corrective action:

NPDES Permit Tracking No.:

E. ANNUAL REPORT CERTIFICATION

1. Compliance Certification

Do you certify that your annual inspection has met the requirements of Part 4.2 of the permit, and that, based upon the results of this inspection, to the best of your knowledge, you are in compliance with the permit? ☐ YES ☐ NO

If NO, summarize why you are not in compliance with the permit:

2. Annual Report Certification

I certify under penalty of law that this document and all attachments were prepared under my direction or supervision in accordance with a system designed to assure that qualified personnel properly gathered and evaluated the information submitted. Based on my inquiry of the person or persons who manage the system, or those persons directly responsible for gathering the information, the information submitted is, to the best of my knowledge and belief, true, accurate, and complete. I am aware that there are significant penalties for submitting false information, including the possibility of fine and imprisonment for knowing violations.

Authorized Representative Printed Name: Title:

Signature: Date Signed:

Harford County

Whiteford

Highway Maintenance Facility

Stormwater Pollution Prevention Plan

June 2023

Revised April 2024
Revised May 2025

Submitted by:

Harford County Government
Department of Public Works
Division of Highways and Stormwater Management

Facility Operator:
Chris Sexton, Supervisor
cdsexton@harfordcountymd.gov
(410)638-3606 x7491

Facility Location:
1405 Pylesville Rd
Whiteford, MD 21160

Robert G. Cassilly
Harford County Executive

Robert S. McCord
Director of Administration

Joseph J. Siemek, P.E
Director of Public Works

Steven A. Walsh, P.E.
Deputy Director of Public Works

FOREWORD

The Harford County Department of Public Works Division of Highways and the Watershed Protection and Restoration Office have developed a Stormwater Pollution Prevention Plan, also known as the *Harford County* Whiteford *Highway Maintenance Facility Storm Water Pollution Prevention Plan.* This *Plan* was developed in accordance with the *General Permit For Discharges From Stormwater Associated With Industrial Activities (Discharge Permit No. 20-SW; NPDES Permit No. MDR0000)* as established by Maryland Department of the Environment, effective February 1, 2023. The *Plan* also satisfies those requirements established by the Maryland Department of the Environment's National Pollutant Discharge Elimination System (NPDES) MS4 permit.

The Division of Highways and the Watershed Protection and Restoration Office shall review the *Harford County Whiteford Highway Maintenance Facility Storm Water Pollution Prevention Plan* at a minimum of every three (3) years. Should any of the following conditions listed below occur, the personnel shall revise and reissue the *Plan* to the appropriate individuals and the Maryland Department of the Environment (MDE):

- Applicable laws are revised;
- The *Plan* fails in an emergency; or
- The facility changes in design or operation which results in an increased potential for fires, explosions, or release of hazardous waste.

All revisions to the *Harford County Whiteford Highway Maintenance Facility Storm Water Pollution Prevention Plan* shall be documented by providing the date and noting the section(s) which have been revised since its initial development.

Contents

SECTION 1: FACILITY DESCRIPTION AND CONTACT INFORMATION.....4
1.1 FACILITY INFORMATION 4
1.2 CONTACT INFORMATION/RESPONSIBLE PARTIES 5
1.3 STORMWATER POLLUTION PREVENTION TEAM 6
1.4 ACTIVITIES AT THE FACILITY 6
1.5 GENERAL LOCATION MAP 7
1.6 SITE MAP 8
SECTION 2: POTENTIAL POLLUTANT SOURCES.....9
2.1 INDUSTRIAL ACTIVITY AND ASSOCIATED POLLUTANTS 9
2.2 SPILLS AND LEAKS 9
2.3 NON-STORMWATER DISCHARGES DOCUMENTATION 9
2.4 SALT STORAGE 9
2.5 VISUAL MONITORING SUMMARY 10
2.6 PFAS AND PCB SOURCE IDENTIFICATION 10
SECTION 3: STORMWATER CONTROL MEASURES 10
3.1 MINIMIZE EXPOSURE 10
3.2 GOOD HOUSEKEEPING 11
3.3 MAINTENANCE 12
3.4 SPILL PREVENTION AND RESPONSE 12
3.5 EROSION AND SEDIMENT CONTROLS 13
3.6 MANAGEMENT OF RUNOFF 13
3.7 SALT STORAGE PILES OR PILES CONTAINING SALT 14
3.8 20-SW SECTOR-SPECIFIC NON-NUMERIC EFFLUENT LIMITS 14
3.9 EMPLOYEE TRAINING 15
3.10 NON-STORMWATER DISCHARGES 16
3.11 WASTE, GARBAGE AND FLOATABLE DEBRIS 16
3.12 DUST GENERATION AND VEHICLE TRACKING OF INDUSTRIAL MATERIALS 16
SECTION 4: SCHEDULES AND PROCEDURES FOR MONITORING.....17

SECTION 5: INSPECTIONS.....18
SECTION 6: SWPPP CERTIFICATION.....19
SECTION 7: SWPPP MODIFICATIONS.....20
SWPPP ATTACHMENTS.....22

SECTION 1: FACILITY DESCRIPTION AND CONTACT INFORMATION

1.1 Facility Information

Name of Facility: Harford County Whiteford Highway Maintenance Facility
Street: 1405 Pylesville Rd
City: Whiteford State: MD ZIP Code: 21160
County: Harford
Permit Registration Number: 20SW1847 (Previous 12SW1847)

Latitude/Longitude (Use decimal format)
Latitude: Longitude:
39.710715 º N (decimal) -76.352982º W (decimal)

Estimated area of industrial activity at site exposed to stormwater: 14.6 (acres)

Primary SIC Code or 2-letter Activity Code: 1611
(refer to Appendix A of the 20-SW)
Identify your applicable sector and subsector: Sector AD.a: Dept of Public Works and Highway Maintenance Facilities

Name and 8-digit identifier of the receiving water body: Broad Creek; 02120205

Are any of your discharges directly into any segment of an "impaired" water? ☐ Yes ☒ No

If Yes, identify name of the impaired water (and segment, if applicable):

Identify the pollutant(s) causing the impairment

For pollutants identified, which do you have reason to believe will be present in your discharge?

N/A

For pollutants identified, which have a completed TMDL? N/A

Do you discharge into a high quality receiving water designated as a Tier 2 water? ☒ Yes ☐ No

Do you discharge into a high quality receiving water designated as Use III or Use IV ☐ Yes ☒ No

1.2 Contact Information/Responsible Parties

Facility Operator:
Name: Chris Sexton
Address: 1405 Pylesville Rd.
City, State, Zip Code: Whiteford, MD 21160
Telephone Number: (410) 638-3606 X7491
Email address: cdsexton@harfordcountymd.gov
Fax number: (410) 638-3602

Facility Owner:
Name: Harford County Government
Address: 220 S Main St.
City, State, Zip Code: Bel Air, MD 21014
Telephone Number: (410) 879-2000
Email address: CountyExecutive@harfordcountymd.gov
Fax number: (410) 638-1387

SWPPP Contact:
Name: Richard Wise
Telephone number: (410) 638-3217 X2446
Email address: rhwise@harfordcountymd.gov
Fax number: (410) 879-8439

1.3 Stormwater Pollution Prevention Team

	NAME	TITLE	PHONE NUMBER	RESPONSIBILITIES
NPDES Program Manager	Danielle Hankins	Administrator	410-638-3217 X1176	Overseeing NPDES Program
Leader	Chris Sexton	Supervisor	410-638-3606 X7491	Overseeing activities occurring at the Whiteford Highway Maintenance Facility Implementing BMPs Evaluating BMPs to measure effectiveness of plan Training
Member	Mike Hoopes	Crew Chief	410-638-3606 X7651	Monitoring Site Inspections Training
Member	Matt Mumpower	Yard Man	410-638-3606	Monitoring Site Inspections Training
Member	Steve Barben	Yard Man	410-638-3606	Monitoring Site Inspections Training
Member	Richard Wise	Water Restoration Specialist	410-638-3217 X2446	Site assessments Identification of pollutant sources and risks SWPPP Preparation

1.4 Activities at the Facility

The Whiteford Highway Maintenance Facility is located at 1405 Pylesville Road, Whiteford, Maryland 21160. The Whiteford Highway Maintenance Facility serves as a fueling site, provides vehicle / equipment maintenance services and stores materials such as salt, sand, traffic paint and herbicide essential in ensuring the safety of motorists traveling Harford County roadways. The site also serves as an oil recycling drop-off site, which is operated and maintained by Maryland Environmental Service (MES).

1.5 General Location Map

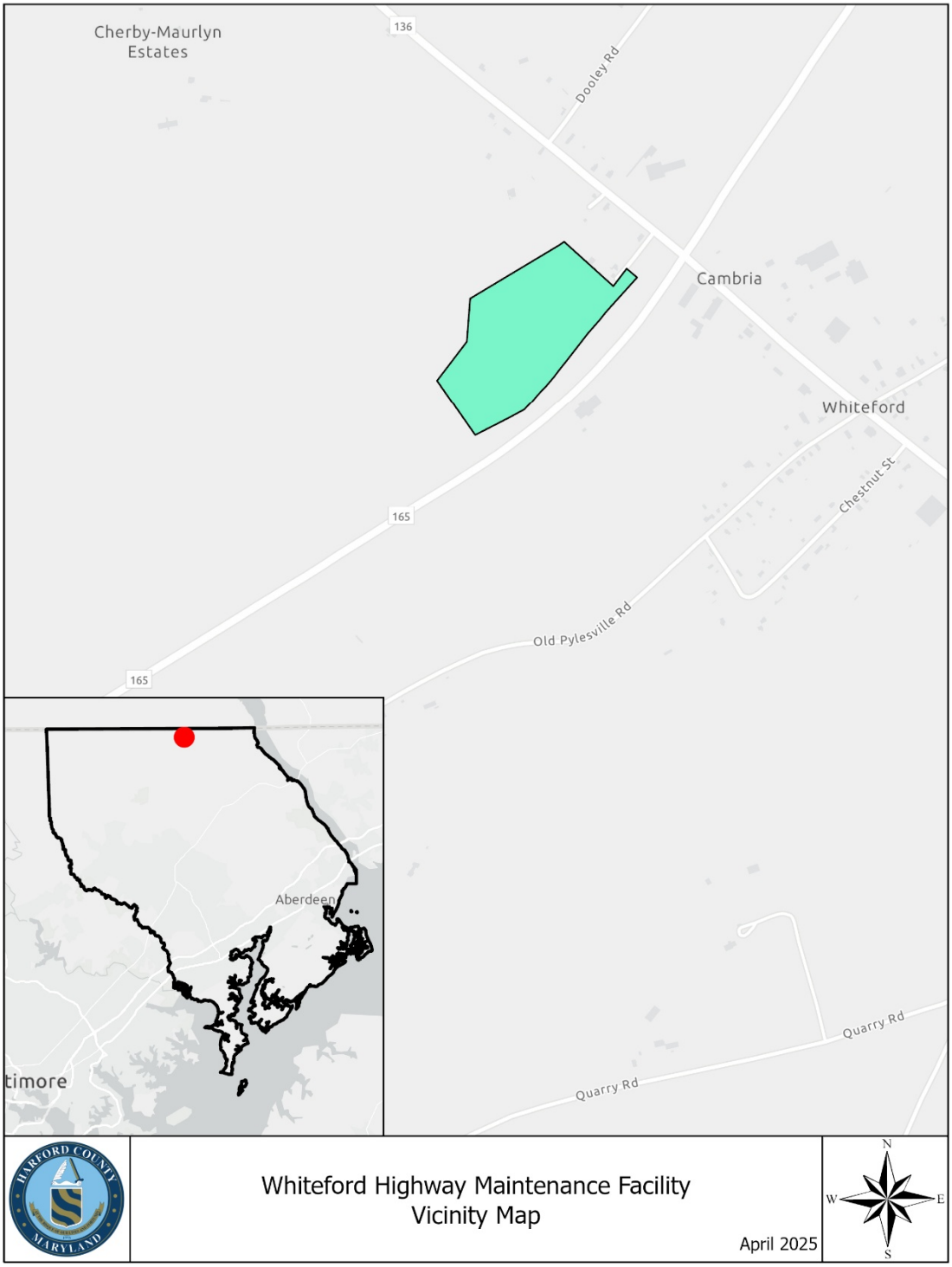

1.6 Site Map

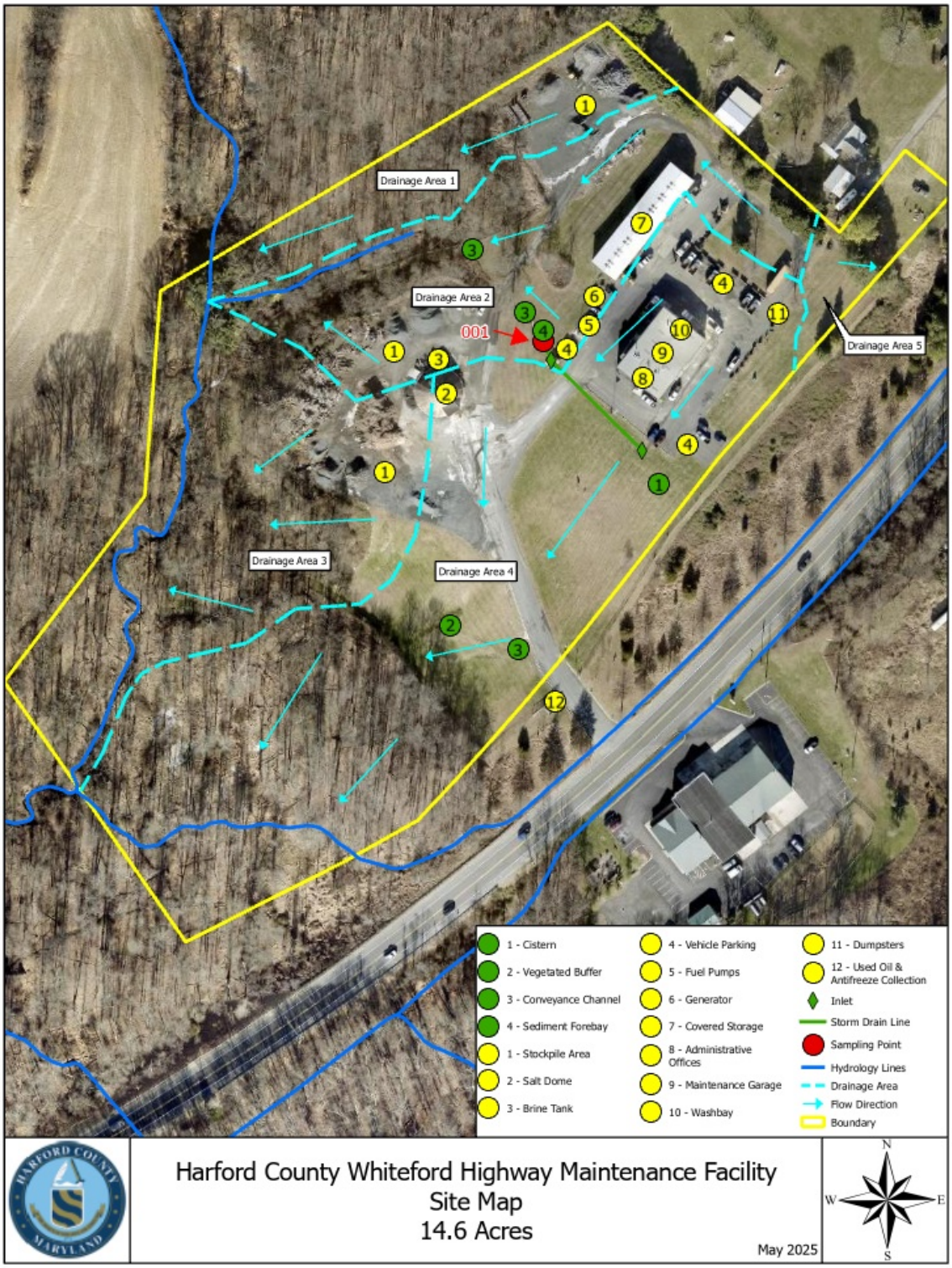
Drainage Area 1
Drainage Area 2
Drainage Area 3
Drainage Area 4
Drainage Area 5
001
1 - Cistern
2 - Vegetated Buffer
3 - Conveyance Channel
4 - Sediment Forebay
1 - Stockpile Area
2 - Salt Dome
3 - Brine Tank
4 - Vehicle Parking
5 - Fuel Pumps
6 - Generator
7 - Covered Storage
8 - Administrative Offices
9 - Maintenance Garage
10 - Washbay
11 - Dumpsters
12 - Used Oil & Antifreeze Collection
Inlet
Storm Drain Line
Sampling Point
Hydrology Lines
Drainage Area
Flow Direction
Boundary
Harford County Whiteford Highway Maintenance Facility
Site Map
14.6 Acres
May 2025
N
W
E
S

SECTION 2: POTENTIAL POLLUTANT SOURCES

2.1 Industrial Activity and Associated Pollutants

Industrial Activity	Associated Pollutants
Material storage - Indoors	Motor oil, antifreeze, paint, fertilizer, grease
Material storage – Outdoors	Aggregate
Fueling Station	Unleaded fuel, Diesel Fuel
Salt Dome	Salt
Salt Brine Tank	Salt Brine
Accidental Spills and Leaks	Diesel Fuel (generator)

2.2 Spills and Leaks

Areas of Site Where Potential Spills/Leaks Could Occur

Location	Outfalls
Fueling Station	Overland flow
Salt Dome / Salt Brine Tank	Overland flow
Parking lots	Overland flow
Generator	Overland flow

Description of Past Spills/Leaks

Date	Description	Outfalls
	none	

2.3 Non-Stormwater Discharges Documentation

Date	Method	Discharge noted	Corrective Action
	Visual Inspection	None	

2.4 Salt Storage

One salt storage dome is located on-site on an asphalt pad that drains to a vegetated buffer. A salt brine tank was installed in 2023 and is located directly next to the salt dome.

2.5 Visual Monitoring Summary

Monthly visual inspections were performed during the last permit period.

2.6 PFAS and PCB Source Identification

There are no known sources of PFAS or PCB at the Whiteford Highway Maintenance Facility.

SECTION 3: STORMWATER CONTROL MEASURES

3.1 Minimize Exposure

Indoor Storage Areas

Storage of materials used for various operations such as equipment maintenance and road painting in containers and/or in environments that are not susceptible to storm water exposure.

Highway Maintenance Building

Material	Purpose and/or Location	Quantity Stored (Maximum)	Likelihood of contact with storm water.
Antifreeze	Used for equipment. Material is stored in containers	55 Gallons	None. Antifreeze is used for equipment and is stored in containers under cover to prevent any exposure to storm water.
Fertilizer	Used for landscaping.	100 Pounds	Fertilizer is used for landscaping purposes under controlled conditions and utilizing Best Management Practices resulting in little or no exposure to stormwater
Oil, Motor	Used for equipment. Material is stored in cans.	55 Gallons	None. Motor oil is used for equipment and is stored in cans under cover therefore negating any exposure to storm water.
Paint	Used for maintenance purposes. Paints are stored inside an inflammable safety cabinet.	192 Ounces	None. Paint is applied in dry conditions, dries in minutes, and is therefore not exposed to storm water.
Grease	Used for lubrication of equipment which is performed indoors. Material is stored in cans.	20 Pounds	None. Grease is used for the lubrication of equipment and is stored in cans under cover and therefore not exposed to stormwater.
Diesel Exhaust Fluid	Used for diesel equipment.	330 Gallons	None. DEF is stored in a tank indoors and therefore not exposed to stormwater.

3.2 Good Housekeeping

The Whiteford Highway Maintenance Facility has implemented the following good housekeeping measures listed below:

Operation and Maintenance

- Maintain dry and clean floors and ground surfaces by using brooms, shovels, vacuum cleaners, or cleaning machines.
- Regularly pick up and dispose of garbage and waste material.
- Make sure equipment is working properly.
- Routinely inspect for leaks or conditions that could lead to discharges of chemicals or contact of storm water with raw materials, intermediate materials, waste materials, or products.
- Make sure outside areas are kept in a neat and orderly condition.
- Implement weekly housekeeping inspections.
- Ensure that spill cleanup procedures are understood by employees.

Material Storage Practices

- Provide adequate aisle space to facilitate material transfer and easy access for inspections.
- Store containers, drums, and bags away from direct traffic routes to prevent accidental spills.
- Stack containers according to manufacturers' instructions to avoid damaging the containers from improper weight distribution.
- Store containers on pallets or similar devices to prevent corrosion of the containers due to contact with moisture on the ground.
- Assign the responsibility of hazardous material inventory to a limited number of people who are trained to handle hazardous materials.

Material Inventory Procedures

- Identify all chemical substances present in the workplace.
- Label all containers to show the name and type of substance, stock number, expiration date, health hazards, suggestions for handling, and first aid information.
- Clearly mark on the inventory hazardous materials that require special handling, storage, use, and disposal considerations.
- Ensure storage areas are designed to contain spills.
- Implement a shelf-life program which can reduce waste that results from overstocking and allows for the disposal of outdated materials.

Employee Participation

- Incorporate information sessions on good housekeeping practices into the facility's employee training program.
- Discuss good housekeeping at employee meetings.
- Post bulletin boards with updated good housekeeping procedures, tips, and reminders.

3.3 Maintenance

The Whiteford Highway Maintenance Facility implemented the following Preventative Maintenance measures and conducts inspections as noted below.

Vegetative Areas

- Personnel shall conduct inspections of the permanent vegetative stabilization area around the perimeter of the facility to determine if repairs, replacements and reseedings are necessary.

Employee Participation

- Schedule monthly Maintenance Inspections.
- Implement a schedule to adjust, repair, or replace equipment or systems in a regular or timely manner.
- Promptly repair defective equipment found during inspections and testing.
- Inspect and test facility equipment and systems to uncover conditions that could cause breakdowns or failures resulting in discharges of pollutants to surface waters.
- Maintain records on Preventive Maintenance inspections.

3.4 Spill Prevention and Response

Upon inspection of the Whiteford Highway Maintenance Facility, the areas identified most susceptible to a spill were the fuel pad and storage areas. Pigs and pads are available at the pumps and storage areas to absorb and dispose of any spilled materials properly.

Preventive measures implemented by Harford County to improve material handling procedures and storage include the following:

- Adopting effective housekeeping practices.
- Performing regular visual inspections to identify signs of wear on storage containers, equipment, etc.
- Performing preventive maintenance on equipment, tanks, etc.
- Using filling procedures for tanks and other equipment to minimize spills.
- Using material transfer procedures that reduce the chance of leaks or spills.

- Substituting less or non-toxic materials for toxic materials.
- Ensuring appropriate security.
- Developing ways to recycle, clean, and/or reuse process materials to reduce the volume brought into the facility.
- Installing leak detection devices, overflow controls, and diversion berms.

In the event of a spill, staff will follow the procedures listed below:

1. Identify the material, the source, and approximate quantity.
2. Attend to any individuals who are injured and contact 911 for further assistance if necessary.
3. Evaluate the potential for fires, explosions, etc.
4. If possible, stop the release to prevent the situation from worsening.
5. Contain the spill using pads, berms, ditches, etc.
6. Evaluate if the situation is an immediate threat to the life or health of fellow employees.
7. If the material has a Reportable Quantity (RQ) Requirement and the spill was in excess of the RQ amount, contact Emergency Response Agencies.
8. Prevent other humans or vehicles from coming into contact with the spill by sectioning of the area, posting a sign, or having someone guard the area.
9. Organize those individuals responsible for spill cleanup, review the situation with them, any hazards they may encounter, and ensure they are using proper equipment, protective clothing, following proper clean up, decontamination, and disposal procedures.
10. Dispose of contaminated absorbents and other supplies properly and decontaminate any equipment used in the cleanup process and dispose of contaminated absorbents and other supplies properly.

Harford County shall, after any spill, evaluate the Response Plan and make any necessary improvements to the Plan.

3.5 Erosion and Sediment Controls

Harford County maintains vegetative buffers, an earth dike and a sediment trap to limit erosion at the Whiteford Highway Maintenance Facility. Harford County's Department of Public Works Watershed Protection and Restoration Office staff conduct annual inspections to ensure proper maintenance of controls.

3.6 Management of Runoff

The following best management practices are installed at the Whiteford Highway Maintenance Facility:

Vegetative Areas

Vegetated buffers receive runoff from the salt dome and the outdoor storage area of aggregate.

Sediment Forebay

The sediment forebay receives runoff from the paved area surrounding the administrative offices, garage and wash bay.

These facilities are inspected triennially as required by the County and MDE. Inspection reports are available from the County.

3.7 Salt Storage Piles or Piles Containing Salt

Whiteford Highway Maintenance Facility has one enclosed salt storage dome and one salt brine tank. The dome houses approximately 1,000 tons of salt that is used for deicing operations. Good Housekeeping practices (sweeping, equipment maintenance) are employed to minimize exposure of salt to stormwater. A 5,500-gallon salt brine tank is located next to the salt dome. Runoff from the paved area is treated with vegetative buffers.

3.8 20-SW Sector-Specific Non-Numeric Effluent Limits

Within Sector AD.a. Department of Public Works and Highways Maintenance Facilities, the Specific Non-Numeric Effluent Limits are described in Sector P Transportation and Warehousing.

P.3 Additional Technology-Based Effluent Limits.

P.3.1 Good Housekeeping Measures

P.3.1.1 Vehicle and Equipment Storage Areas

P.3.1.2 Fueling Areas

The fueling area is covered to minimize exposure to stormwater. Spills are handled as described in Item 3.4 above.

P.3.1.3 Material Storage Areas

The material storage areas are handled as described in Item 3.2 above.

P.3.1.4 Vehicle and Equipment Cleaning Areas

P.3.1.5 Vehicle and Equipment Maintenance Areas

P.3.1.6 Locomotive Sanding

Not applicable.

P.4 Additional SWPPP Requirements

P.4.1 Drainage Area Site Map

The site map is provided in Section 1.6 above.

P.4.2 Potential Pollutant Sources

Potential Pollutant Sources are described in Items 2.1 and 2.2 above.

P.4.3 Description of Good Housekeeping Measures

Good Housekeeping Measures are described in Section 3.2 above.

P.5 Additional Inspection Requirements

Inspection procedures are described in Sections 3.2 and 3.3 above.

3.9 Employee Training

Whiteford Highway Maintenance Facility conducts the employee training programs described below and makes modifications as necessary to ensure all employees are properly educated of all measures contained in the pollution prevention plan. Employee training records shall be kept on file at the Whiteford Highway Maintenance Facility.

TRAINING TOPICS	BRIEF DESCRIPTION OF TRAINING PROGRAM / MATERIALS	SCHEDULE FOR TRAINING (LIST DATES)	ATTENDEES
SPILL PREVENTION AND RESPONSE Identifying potential spill areas and drainage routes; Procedures for reporting spills; Appropriate material handling procedures and storage requirements; Implementing spill response procedures	Videos and Posted Notices	Routine training to be conducted by Whiteford Highway Maintenance Facility staff	All shop employees
GOOD HOUSEKEEPING Regular vacuuming and/or sweeping; Prompt cleanup of spilled materials to prevent pollution run-off; Identify where brooms, vacuums, sorbents, foams, neutralizing agents, and other good housekeeping and spill response equipment are located; Instruction on securing drums and containers and frequently checking for leaks and spills; Outline a regular schedule for housekeeping activities	Safety Training Meetings	Annually	All shop employees
MATERIAL MANAGEMENT PRACTICES Organize materials for storage; Identify all toxic and hazardous substances stored and handled onsite; Discuss handling procedures for all toxic and hazardous materials	Briefings	Annually	All shop employees

3.10 Non-Stormwater Discharges

Non-stormwater discharges are addressed as described in Section 2.3 above.

3.11 Waste, Garbage and Floatable Debris

Waste, Garbage and Floatable Debris are addressed in Section 3.2 above.

3.12 Dust Generation and Vehicle Tracking of Industrial Materials

Good housekeeping measures on paved surfaces are employed to minimize dust generation.

SECTION 4: SCHEDULES AND PROCEDURES FOR MONITORING

Whiteford Highway Maintenance Facility does not have Benchmark Monitoring Requirements as described for Sector AD.a *Department of Public Works and Highway Maintenance Facilities***.** Stormwater from the Whiteford Highway Maintenance Facility discharges to an unnamed tributary to Broad Creek between the headwaters and confluence with Jacks Hole. There are no impairments to the receiving water.

Location	Frequency	Method	Responsible Person
Sampling Point 001	**Quarterly**	**Visual evaluation**	**Yard Man**

Once per quarter, a stormwater sample must be collected from the outfall in such a manner that it is representative of the stormwater discharge from that outfall. A quality storm event is any storm where there is measurable discharge. The sample(s) shall be collected in a colorless glass or plastic container and visually examined for the parameters listed on the Quarterly Visual Monitoring Form (Attachment D). The Quarterly Visual Monitoring Form shall be signed and dated by the person conducting the visual examination. A copy of the Quarterly Visual Monitoring Form shall be kept with the facility's SWPPP and be available when requested.

Due to no outfalls being present at the Harford County Whiteford Highway Maintenance Facility, the quarterly visual monitoring sample will be collected at Sampling Point 001 (see attached site maps on Page 8 and Attachment B).

Should there be any indication of a pollutant, an inspection will be performed to determine the source of the pollutant and corrective actions will be taken to remove the source.

SECTION 5: INSPECTIONS

In addition to the quarterly visual monitoring of stormwater discharge, routine site inspections will be performed as described in Sections 3.2 and 3.3 above on a quarterly basis as required by the county's 20-SW permit. Annually, a comprehensive site evaluation (Attachment E) will be performed by qualified personnel. This inspection will include the following elements:

- Inspect storm water drainage areas for evidence of pollutants entering the drainage system;
- Evaluate the effectiveness of measures to reduce pollutant loadings and whether additional measures are needed;
- Observe structural measures, sediment controls, and other storm water BMPs to ensure proper operation;
- Inspect any equipment needed to implement the plan, such as spill response equipment;
- Revise the plan as needed within two weeks of inspection (potential pollutant source description and description of measures and controls);
- Implement any necessary changes in a timely manner, but at least within 12 weeks of the inspection;
- Prepare a report summarizing inspection results and follow up actions, the date of inspection and personnel who conducted the inspection; identify any incidents of non-compliance or certify that the facility is in compliance with the plan;
- Document all incidents of noncompliance in the inspection report. Where there are no incidents of noncompliance, the inspection report must contain a certification that the facility is in compliance with the plan; and
- Sign the report and submit it with the plan.

SECTION 6: SWPPP CERTIFICATION

I certify under penalty of law that this document and all attachments were prepared under my direction or supervision in accordance with a system designed to assure that qualified personnel properly gathered and evaluated the information submitted. Based on my inquiry of the person or persons who manage the system, or those persons directly responsible for gathering the information, the information submitted is, to the best of my knowledge and belief, true, accurate, and complete. I am aware that there are significant penalties for submitting false information, including the possibility of fine and imprisonment for knowing violations.

Name: Danielle Hankins Title: Administrator

Signature: Danielle M Hankins
I am approving this document
2025.05.27 15:27:00-04'00' Date: 05.27.2025

SECTION 7: SWPPP MODIFICATIONS

Original Completion Date: June 2023

Revision Date: April 2024

Revisions:

- Section 1.3 Stormwater Pollution Prevention Team
- Section 2.1 Industrial Activity and Associated Pollutants
  - Addition of the salt brine tank
- Section 3.7 Salt Storage Piles or Piles Containing Salt
  - Addition of the salt brine tank
- Attachment B – Update of the site map showing the location of the new salt brine tank

Revision Date: May 2025

Revisions:

- Overall reformatting and grammar corrections
- Section 1.2 Contact Information/Responsible Parties
  - Updated SWPPP Contact
- Section 1.3 Stormwater Pollution Prevention Team
  - Updated Administrator
  - Updated Watershed Restoration Specialist
- Section 1.5 General Location Map
  - Updated General Location Map
- Section 1.6 Site Map
  - Revised drainage areas
  - Relabeled drainage areas
  - Added location of Sampling Point 001
  - Corrected location of inlet
  - Add storm drain line
  - Added cistern as a BMP
  - Revised labels for BMPs
  - Added generator location
  - Added dumpster location
  - Revised labels for possible pollutant sources
- Section 2.1 Industrial Activity and Associated Polluants
  - Added accidental spills and leaks of diesel fuel related to the facility generator
- Section 2.2 Spills and Leaks – Areas of Site Where Potential Spills/Leaks Could Occur
  - Added generator

- Section 2.5 Visual Monitoring Summary
  - Updated to reflect correct monitoring frequency during previous permit period
- Section 3.1 Minimize Exposure – Indoor Storage Areas – Highway Maintenance Building
  - Removed column for Quantity Used
  - Removed column for Quantity Produced
  - Removed column for Quantity Exposed in the Last 3 Years
  - Removed column for Past Significant Spill or Leak
  - Updated column for Quantity Stored to represent the maximum amount of product to be stored at any given time
  - Removed oil-dri
  - Added DEF
- Section 3.6 Management of Runoff
  - Included sediment forebay
- Section 3.9 Employee Training
  - Updated from monthly training frequency to annual training frequency
- Section 4 Schedules and Procedures for Monitoring
  - Added table displaying sample location, frequency method and responsible party
  - Added language regarding the collection of quarterly visual monitoring samples
- SWPPP Attachments
  - Updated Attachment A – General Location Map included as an 11”x17” map
  - Updated Attachment B – Site Map included as an 11”x17” map
  - Included Attachment D – Quarterly Visual Monitoring Form
  - Included Attachment E – EPA Annual Reporting Form

SWPPP ATTACHMENTS

Attachment A – General Location Map

Attachment B – Site Map

Attachment C – General Permit 20-SW

Attachment D – Quarterly Visual Monitoring Form

Attachment E – EPA Annual Reporting Form

Attachment A – General Location Map

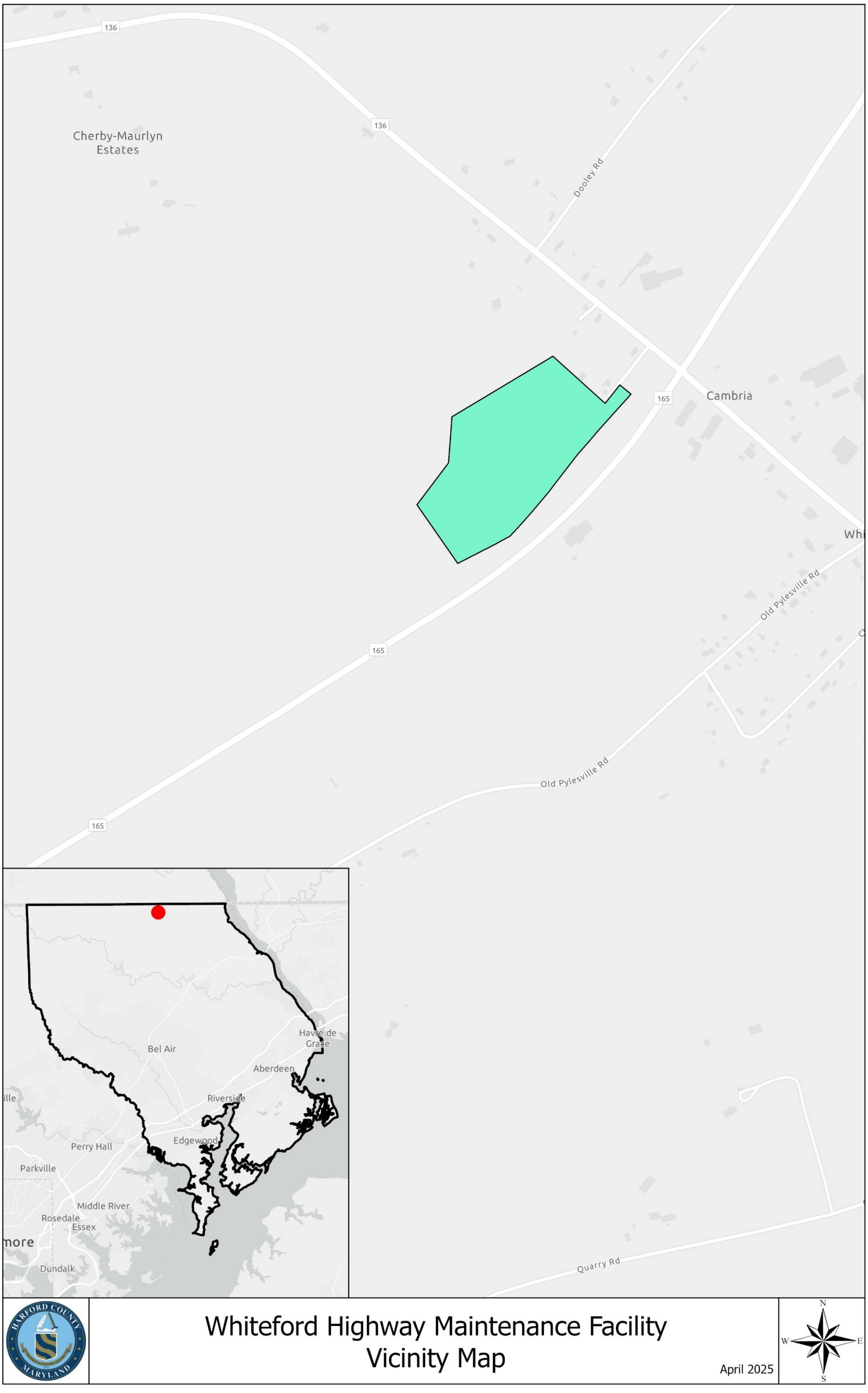

Attachment B – Site Map

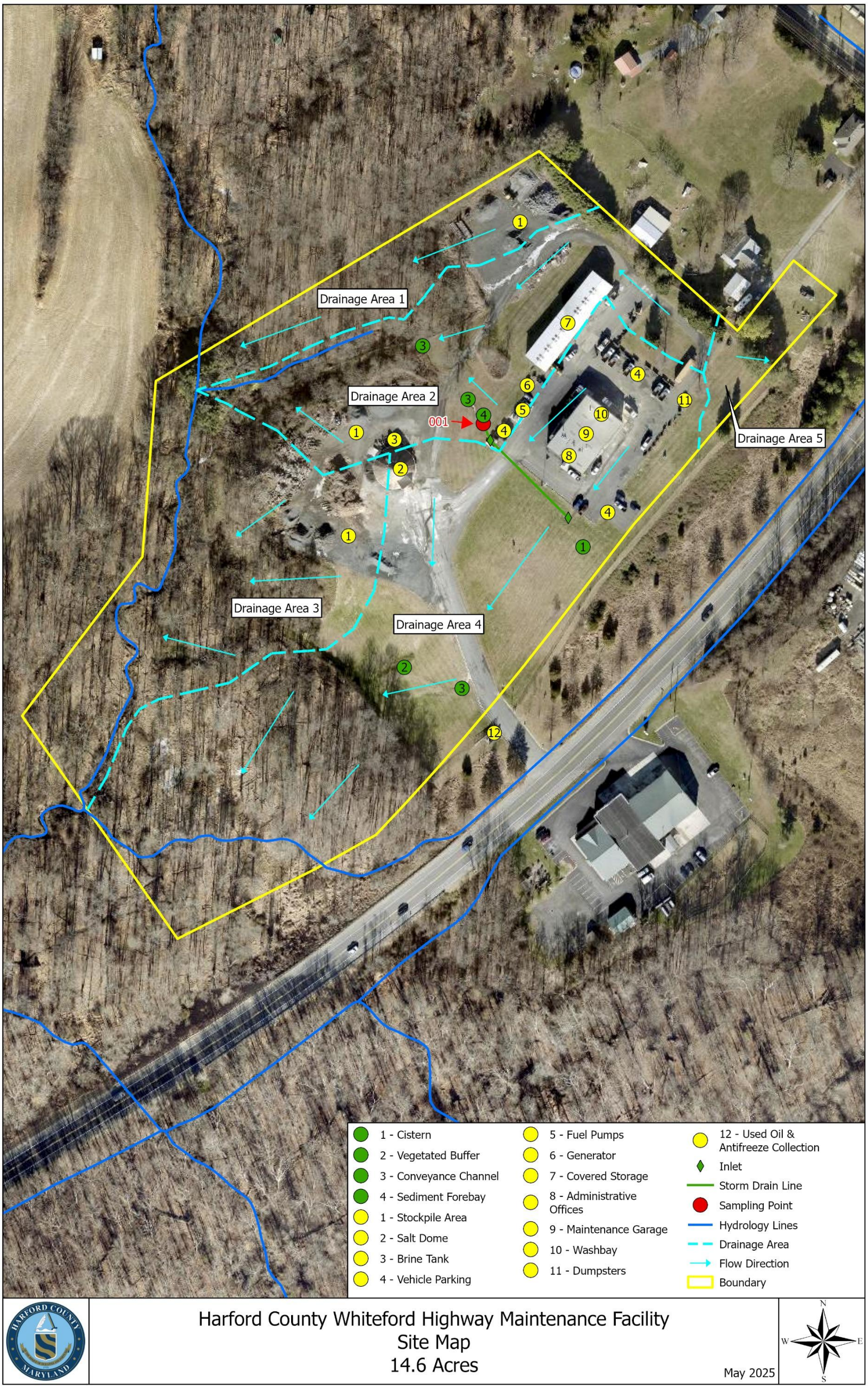

Attachment C – General Permit 20-SW

Attachment D – Quarterly Visual Monitoring Form

Quarterly Visual Monitoring Form

Fill out a separate form for each outfall sampled.

Sample Location					
Quarter / Year:		**Date / Time Collected:**		**Date / Time Examined:**	
Qualifying Storm Event?	Yes No	**Runoff Source:**	Rainfall Snowmelt		
Collector's Name & Title					
Examiner's Name & Title					

Parameter	Parameter Description	Parameter Characteristics
1. Color	Does the stormwater appear to have any color? **Yes** **No (Clear)**	If Yes, describe: *Yellow* *Brown* *Red* *Gray* *Other*:
2. Clarity	Is the stormwater not clear? **Yes** **No**	If not clear, which of the following best describes the clarity of the stormwater? *Suspended Solids* *Milky/Cloudy* *Opaque* *Other :*
3. Oil Sheen	Can you see a rainbow effect or sheen on the water surface? **Yes** **No**	Which best describes the sheen? *Rainbow sheet* *Floating oil globules* *Other :*
4. Odor	Does the sample have an odor? **Yes** **No**	If Yes, describe: *Chemical* *Musty* *Rotten Eggs* *Sewage* *Sour Milk* *Oil/Petroleum* *Other :*
5. Floating Solids	Is there anything on the surface of the sample? **Yes** **No**	If Yes, describe: *Suds* *Oily Film* *Garbage* *Sewage* *Water Fowl Excrement* *Other :*
6. Suspended Solids	Is there anything suspended in the sample? **Yes** **No**	Describe:
******Leave sample undisturbed for 30 minutes.******		
7. Settled Solids	Is there anything settled on the bottom of the sample? **Yes** **No**	Describe: (*note type, size and material after sample is not disturbed for 30 minutes)*
8. Foam	Does foam or material form on the top of the sample surface if you shake it? **Yes** **No**	Describe:

9. If there are any visible indicators of pollution identify (1) where the pollution may come from and (2) any corrective actions taken.

Stormwater Collector's Signature and Date:

Stormwater Examiner's Signature and Date:

Note – Sample should be collected and analyzed in a colorless glass or plastic bottle.

Instructions for Completing the Visual Monitoring Form

Per PART V. INSPECTIONS, MONITORING, AND REPORTING, you must collect a stormwater sample from each outfall once each quarter for the entire permit term and conduct a visual assessment of each sample. You must follow the monitoring procedures outlined in Part V.C. These samples should be collected in such a manner that they are representative of the stormwater discharge from that outfall. Each assessment must be kept onsite with your SWPPP and available for inspection and review by the Department at anytime.

First, fill out all information on the top of the visual monitoring form. A qualifying storm event is any storm where there is a measurable discharge. Then, take a grab sample in a clear container. Evaluate the sample in a well-lit area for the following parameters:

1. **Color:** Record the best description of the sample color in the appropriate space on the form.
2. **Clarity**: This parameter refers to how cloudy the sample is. It is *usually* an indication of fewer pollutants in the water if the sample is clear or transparent. If the clarity has changed since the last sample, try to identify what might have caused this to happen.
   - **Clear** – Sample doesn't block any light; can be seen through regardless of color.
   - **Cloudy** – Sample blocks some light; objects not clear but can be identified looking through the sample.
   - **Very Cloudy** – Sample blocks most light; objects cannot be identified looking through the sample.
   - **Opaque** – Sample blocks all light; objects cannot be seen when looking through the sample.
3. **Oil Sheen:** Record whether or not an oil sheen is present. If a film of iridescent color is noted on the surface of the sample or a rainbow effect appears to be floating on the surface of the water, this usually indicates oil is present.
4. **Odor:** If sample has no odor other than natural rainwater or snowmelt, write "NO" on the visual monitoring form. Note the presence of any of the following odors if detected, such as gasoline, diesel, oil, solvents (WD-40, other petroleum products, etc.), garbage, fishy, sweet/sugary, any other unusual odors not normally present in clean runoff from the area sampled.
5. **Floating Solids:** A contaminated flow may contain solids or liquids floating on the surface. Identifying floatables can aid in finding the source of the contamination. Examples of floatables are spoiled food products, oils, plant parts, solvents, sawdust, foams and fuel. Give a general description of the type of floating solids present (wood chips, leaf debris, algae, etc) in the general comments section for each sample. Identify amount of floating solids as described below.
   - **High** – More than 20% of the surface of the sample is covered with floating solids.
   - **Moderate** – Less than 20% of the surface of the sample is covered with floating solids.
   - **Slight** – Only a few floating particles observed on the surface of the sample.
   - **None** – No floating solids present on the surface of the sample.
6. **Suspended solids:** Record whether or not suspended solids are present in the sample. Suspended solids are particles floating inside the column of water, not on top, and may contribute to changes in water color or clarity. Cracked or deteriorated concrete or peeling surface paint at an outfall usually indicates the presence of severely contaminated discharges. Contaminants causing this type of damage are usually very acidic or basic.

---------- WAIT 30 MINUTES ----------

Leave the sample undisturbed for 30 minutes to allow the water and anything in it to settle.

7. **Settled Solids:** After 30 minutes has passed, give a general description of the type of settled solids present (sand, decayed plant matter, rust particles, etc.) in the general comments section.
8. **Foam:** After completing #7, shake the bottle gently. Record foam results on the form as they most closely match one of the descriptions listed below.
   - **None** – Most bubbles break down within ten (10) seconds of shaking; only a few large bubbles persist longer than ten (10) seconds.
   - **Moderate** – Many small bubbles are present but these bubbles persist for less than two (minutes) after shaking.
   - **High** – Many small bubbles are present and they persist longer than two (2) minutes after shaking.
9. Detail any concerns, corrective actions taken and any other indicators of pollution present in the sample. This should include the identified source if there are visible indicators present in the sample. The person performing test must sign and date each form**.**

Attachment E – EPA Annual Reporting Form

NPDES Permit Tracking No.:

UNITED STATES ENVIRONMENTAL PROTECTION AGENCY
WASHINGTON, DC 20460

Annual Reporting Form

A. GENERAL INFORMATION

1. Facility Name:

2. NPDES Permit Tracking No.:

3. Facility Physical Address:

a. Street:

b. City: c. State: d. Zip Code: -

4. Lead Inspectors Name: Title:

Additional Inspectors Name(s):

5. Contact Person: Title:

Phone: - - Ext. E-mail:

6. Inspection Date : / /

B. GENERAL INSPECTION FINDINGS

1. As part of this comprehensive site inspection, did you inspect all potential pollutant sources, including areas where industrial activity may be exposed to stormwater?
☐ YES ☐ NO

If NO, describe why not:

NOTE: *Complete Section C of this form for each industrial activity area inspected and included in your SWPPP or as newly identified in B.2 or B.3 below where pollutants may be exposed to stormwater.*

2. Did this inspection identify any stormwater or non-stormwater outfalls not previously identified in your SWPPP? ☐ YES ☐ NO

If YES, for each location, describe the sources of those stormwater and non-stormwater discharges and any associated control measures in place:

NPDES Permit Tracking No.:

3. Did this inspection identify any sources of stormwater or non-stormwater discharges not previously identified in your SWPPP? ☐ YES ☐ NO

If YES, describe these sources of stormwater or non-stormwater pollutants expected to be present in these discharges, and any control measures in place:

4. Did you review stormwater monitoring data as part of this inspection to identify potential pollutant hot spots? ☐ YES ☐ NO ☐ NA, no monitoring performed

If YES, summarize the findings of that review and describe any additional inspection activities resulting from this review:

5. Describe any evidence of pollutants entering the drainage system or discharging to surface waters, and the condition of and around outfalls, including flow dissipation measures to prevent scouring:

6. Have you taken or do you plan to take any corrective actions, as specified in Part 3 of the permit, since your last annual report submission (or since you received authorization to discharge under this permit if this is your first annual report), including any corrective actions identified as a result of this annual comprehensive site inspection?

☐ YES ☐ NO

If YES, how many conditions requiring review for correction action as specified in Parts 3.1 and 3.2 were addressed by these corrective actions? ☐☐

NOTE: *Complete the attached Corrective Action Form (Section D) for each condition identified, including any conditions identified as a result of this comprehensive stormwater inspection.*

NPDES Permit Tracking No.:

C. INDUSTRIAL ACTIVITY AREA SPECIFIC FINDINGS

Complete one block for each industrial activity area where pollutants may be exposed to stormwater. Copy this page for additional industrial activity areas.

In reviewing each area, you should consider:

- Industrial materials, residue, or trash that may have or could come into contact with stormwater;
- Leaks or spills from industrial equipment, drums, tanks, and other containers;
- Offsite tracking of industrial or waste materials from areas of no exposure to exposed areas; and
- Tracking or blowing of raw, final, or waste materials from areas of no exposure to exposed areas.

INDUSTRIAL ACTIVITY AREA _____:

1. Brief Description**:**

2. Are any control measures in need of maintenance or repair? ☐ YES ☐ NO

3. Have any control measures failed and require replacement? ☐ YES ☐ NO

4. Are any additional/revised control measures necessary in this area? ☐ YES ☐ NO

If YES to any of these three questions, provide a description of the problem: (Any necessary corrective actions should be described on the attached Corrective Action Form)

INDUSTRIAL ACTIVITY AREA _____:

1. Brief Description:

2. Are any control measures in need of maintenance or repair? ☐ YES ☐ NO

3. Have any control measures failed and require replacement? ☐ YES ☐ NO

4. Are any additional/revised c necessary in this area? ☐ YES ☐ NO

If YES to any of these three questions, provide a description of the problem: (Any necessary corrective actions should be described on the attached Corrective Action Form)

INDUSTRIAL ACTIVITY AREA _____:

Brief Description:

2. Are any control measures in need of maintenance or repair? ☐ YES ☐ NO

3. Have any control measures failed and require replacement? ☐ YES ☐ NO

4. Are any additional/revised BMPs necessary in this area? ☐ YES ☐ NO

If YES to any of these three questions, provide a description of the problem: (Any necessary corrective actions should be described on the attached Corrective Action Form)

NPDES Permit Tracking No.:

NOTE: *Copy this page and attach additional pages as necessary*

INDUSTRIAL ACTIVITY AREA _____:

1. Brief Description:

2. Are any control measures in need of maintenance or repair? ☐ YES ☐ NO

3. Have any control measures failed and require replacement? ☐ YES ☐ NO

4. Are any additional/revised BMPs necessary in this area? ☐ YES ☐ NO

If YES to any of these three questions, provide a description of the problem: (Any necessary corrective actions should be described on the attached Corrective Action Form)

INDUSTRIAL ACTIVITY AREA _____:

1. Brief Description:

2. Are any control measures in need of maintenance or repair? ☐ YES ☐ NO

3. Have any control measures failed and require replacement? ☐ YES ☐ NO

4. Are any additional/revised BMPs necessary in this area? ☐ YES ☐ NO

If YES to any of these three questions, provide a description of the problem: (Any necessary corrective actions should be described on the attached Corrective Action Form)

INDUSTRIAL ACTIVITY AREA _____:

1. Brief Description:

2. Are any control measures in need of maintenance or repair? ☐ YES ☐ NO

3. Have any control measures failed and require replacement? ☐ YES ☐ NO

4. Are any additional/revised BMPs necessary in this area? ☐ YES ☐ NO

If YES to any of these three questions, provide a description of the problem: (Any necessary corrective actions should be described on the attached Corrective Action Form)

NPDES Permit Tracking No.:

D. CORRECTIVE ACTIONS

Complete this page for each specific condition requiring a corrective action or a review determining that no corrective action is needed. Copy this page for additional corrective actions or reviews.

Include both corrective actions that have been initiated or completed since the last annual report, and future corrective actions needed to address problems identified in this comprehensive stormwater inspection. Include an update on any outstanding corrective actions that had not been completed at the time of your previous annual report.

1. Corrective Action # ____ of ____ for this reporting period.

2. Is this corrective action:

- ☐ An update on a corrective action from a previous annual report; or
- ☐ A new corrective action?

3. Identify the condition(s) triggering the need for this review:

- ☐ Unauthorized release or discharge
- ☐ Numeric effluent limitation exceedance
- ☐ Control measures inadequate to meet applicable water quality standards
- ☐ Control measures inadequate to meet non-numeric effluent limitations
- ☐ Control measures not properly operated or maintained
- ☐ Change in facility operations necessitated change in control measures
- ☐ Average benchmark value exceedance
- ☐ Other (describe): _____

4. Briefly describe the nature of the problem identified:

5. Date problem identified: __/__/____

6. How problem was identified:

- ☐ Comprehensive site inspection
- ☐ Quarterly visual assessment
- ☐ Routine facility inspectio
- ☐ Benchmark monitoring
- ☐ Notification by EPA or State or local authorities
- ☐ Other (describe): _____

7. Description of corrective action(s) taken or to be taken to eliminate or further investigate the problem (e.g., describe modifications or repairs to control measures, analyses to be conducted, etc.) or if no modifications are needed, basis for that determination:

8. Did/will this corrective action require modification of your SWPPP? ☐ YES ☐ NO

9. Date corrective action initiated: __/__/____

10. Date correction action completed: __/__/____ or expected to be completed: __/__/____

11. If corrective action not yet completed, provide the status of corrective action at the time of the comprehensive site inspection and describe any remaining steps (including timeframes associated with each step) necessary to complete corrective action:

NPDES Permit Tracking No.:

E. ANNUAL REPORT CERTIFICATION

1. Compliance Certification

Do you certify that your annual inspection has met the requirements of Part 4.2 of the permit, and that, based upon the results of this inspection, to the best of your knowledge, you are in compliance with the permit? ☐ YES ☐ NO

If NO, summarize why you are not in compliance with the permit:

2. Annual Report Certification

I certify under penalty of law that this document and all attachments were prepared under my direction or supervision in accordance with a system designed to assure that qualified personnel properly gathered and evaluated the information submitted. Based on my inquiry of the person or persons who manage the system, or those persons directly responsible for gathering the information, the information submitted is, to the best of my knowledge and belief, true, accurate, and complete. I am aware that there are significant penalties for submitting false information, including the possibility of fine and imprisonment for knowing violations.

Authorized Representative Printed Name: Title:

Signature: Date Signed:

Contractor Street Sweeping Routes

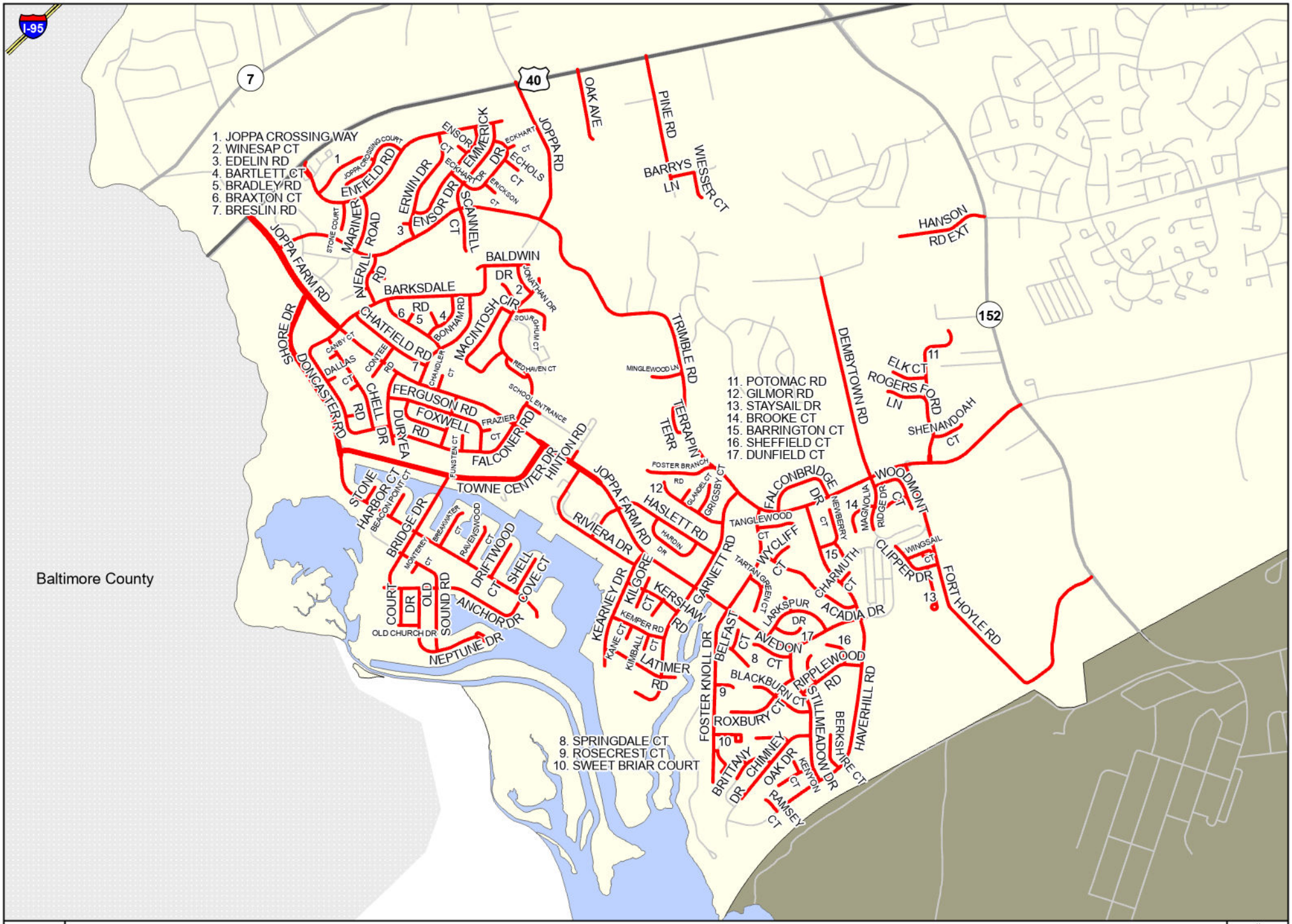
1. JOPPA CROSSING WAY
2. WINESAP CT
3. EDELIN RD
4. BARTLETT CT
5. BRADLEY RD
6. BRAXTON CT
7. BRESLIN RD
8. SPRINGDALE CT
9. ROSECREST CT
10. SWEET BRIAR COURT
11. POTOMAC RD
12. GILMOR RD
13. STAYSAIL DR
14. BROOKE CT
15. BARRINGTON CT
16. SHEFFIELD CT
17. DUNFIELD CT
Baltimore County
I-95
7
40
152
JOPPA RD
OAK AVE
PINE RD
BARRYS LN
WIESSER CT
HANSON RD EXT
JOPPA FARM RD
AVERILL ROAD
MARINER RD
ENFIELD RD
ERWIN DR
ENSOR DR
SCANNELL CT
EMMERICK DR
ECHOLS CT
ECKHART CT
ERICKSON CT
BALDWIN DR
JONATHAN DR
MACINTOSH CIR
SOURGHUM CT
REDHAVEN CT
BARKSDALE RD
CHATFIELD RD
BONHAM RD
CONTEE RD
CHANDLER CT
CANBY CT
DALLAS CT
CHELL DR
DURYEA RD
DONCASTER RD
SHORE DR
FERGUSON RD
FOXWELL RD
FRAZIER CT
FALCONER RD
FUNSTEN CT
SCHOOL ENTRANCE
TOWNE CENTER DR
HINTON RD
TRIMBLE RD
MINGLEWOOD LN
TERRAPIN TERR
FOSTER BRANCH RD
GLANDEL CT
GRISSBY CT
HASLETT RD
HARDIN DR
RIVIERA DR
JOPPA FARM RD
GARNETT RD
KEARNEY DR
KILGORE CT
KERSHAW RD
KEMPER RD
KANE CT
KIMBALL CT
LATIMER RD
DEMBYTOWN RD
ELK CT
ROGERS FORD LN
SHENANDOAH CT
FALCONBRIDGE DR
WOODMONT CT
MAGNOLIA RIDGE DR
NEWBERRY CT
TANGLEWOOD CT
WYCLIFF CT
TARTAN GREEN CT
LARKSPUR DR
CHARMUTH CT
ACADIA DR
CLIPPER DR
WINGSAIL CT
FORT HOYLE RD
AVEDON CT
BELFAST CT
FOSTER KNOLL DR
BLACKBURN CT
ROXBURY CT
RIPPLEWOOD RD
STILLMEADOW DR
HAVERHILL RD
BERKSHIRE CT
BRITTANY DR
CHIMNEY OAK DR
KENYON CT
RAMSEY CT
STONE HARBOR CT
BEACON POINT CT
BRIDGE DR
MONTEREY CT
BREAKWATER CT
RAVENSWOOD CT
DRIFTWOOD CT
SHELL COVE CT
COURT DR
OLD SOUND RD
OLD CHURCH DR
ANCHOR DR
NEPTUNE DR
Harford County Street Sweeping
Area 1
Not to Scale

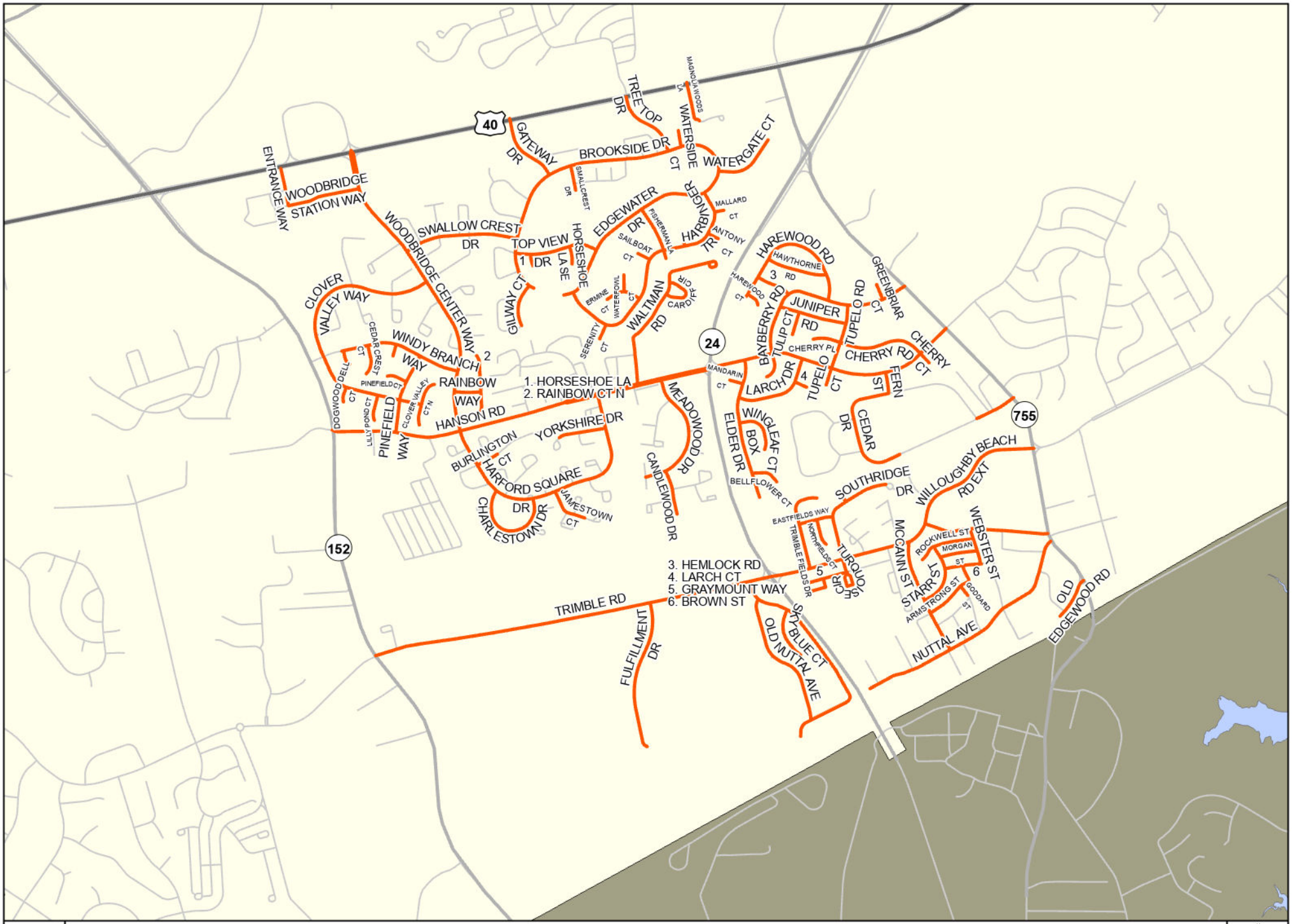

Harford County Street Sweeping
Area 2

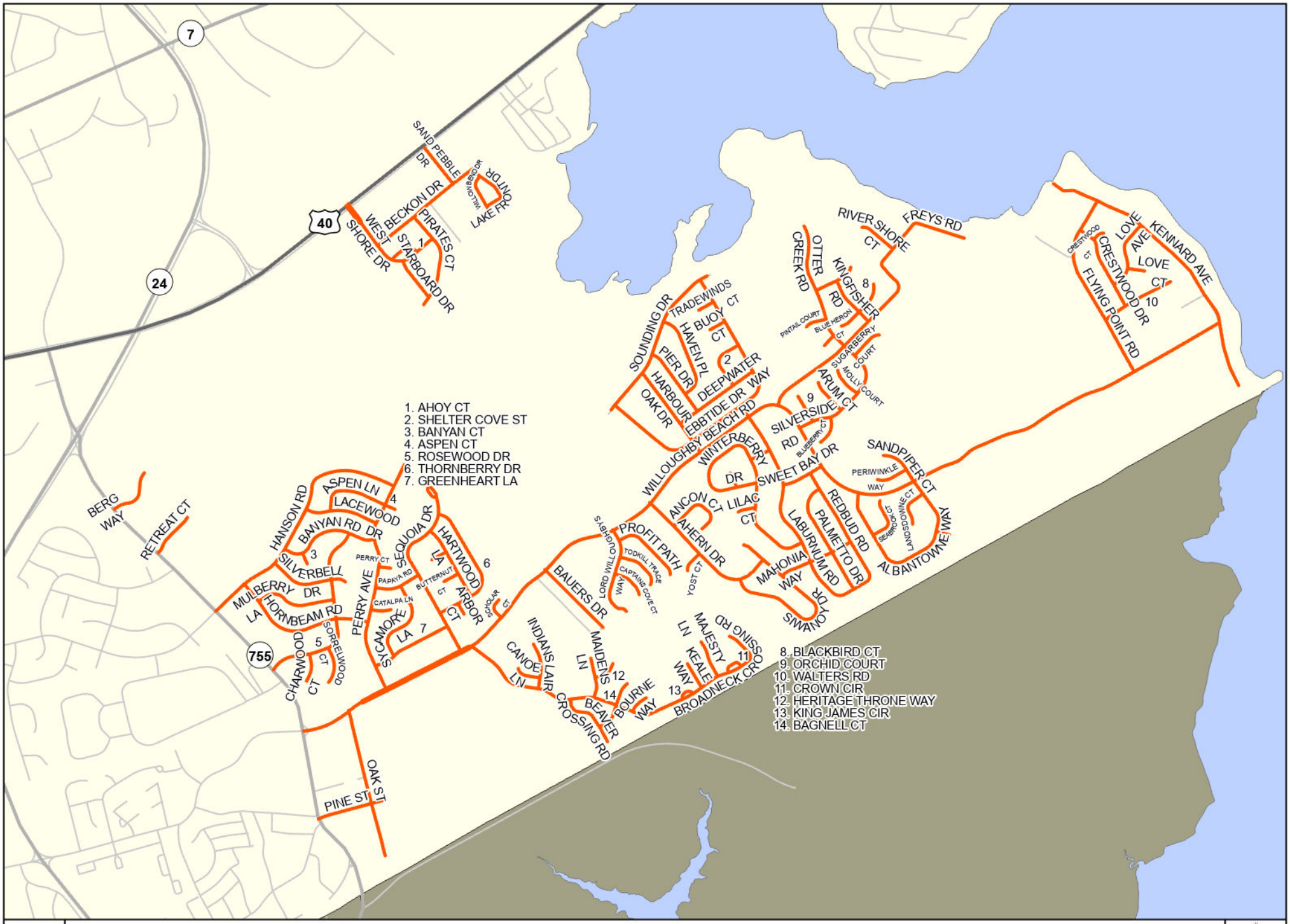

Harford County Street Sweeping
Area 3

Not to Scale